INOVANCE

AC DRIVES

NANDEE

www.nandee.co.th

MD520 - Universal AC Drive

High Performance for Wide-Range Application

IE2

STO SIL3

PRODUCT FEATURES

- Unified AC asynchronous and PM synchronous motor control
- Wide operating voltage and product range:
  - 3 ph 380-480 Vac: 0.4 to 500 kW
  - 3 ph 200-240 Vac: 0.4 to 75 kW
  - 1 ph 200-240 Vac: 0.4 to 2.2 kW
- STO SIL 3 PL e
- Built-in DC reactor (400 V: 18.5 kW and above；200 V: 11 kW and above)
- Enhanced reliability: conformal coated PCBs compliant to 3S2 and 3C3 environments
- Complies to efficiency level IE2 as defined in IEC 61800-9-2
- Through-hole mounting options (0.4 to 160 kW)

MD520- FEATURES & FUNCTIONS

- Induction motor and PM synchronous motor control:
  - Open loop V/F (induction motors only) and SVC
  - Closed loop FVC
- Dual rated: heavy duty (overload: 150%/ 1 min) and normal duty (overload: 110%/ 1 min)
- Starting torque
  - 150% at 0.25 Hz for SVC
  - 180% at 0 Hz for FVC
- Communication options:
  - Modbus-RTU
  - Modbus-TCP
  - PROFIBUS-DP
  - CANopen
  - CANlink
  - PROFINET
  - EtherCAT
  - Ethernet/IP
- Category C2 compliance with external RFI filter. Ratings with built-in filter comply with Category C3*1
- Built-in dynamic braking unit, up to/including 75 kW (400 V) or 37kW (200 V)
- Bipolar analog input as standard (-10 to +10 V) PTC input as standard
- Flexible programmable I/Os
- User programmable logic
- Variable DC-injection braking
- Comprehensive trip diagnostics
- Output frequency: 599 Hz
- Application dedicated functions:
  - Master-slave function (torque, speed)
  - Textile wobble control
- Brake control logic
- 4 motor parameter sets
- Automatic torque boost
- PC-based software: simplified start up & backup*2
- Simplified parameters for easy start up
- 4 independent S-ramps

1 For detailed EMC compliance information, consult your local
*2 USB to RS485 adapter required. MDKE-10 or SOP-20 keypads Inovance representative can be used for this purpose

NEW: built-in colour LED keypad

- The clearest possible information display
- Displays multiple pieces of information simultaneously (e.g. drive status and operating information)
- The clearest possible information display

SPECIFICATIONS

Heavy duty ratings, 150% overload

	Voltage class	Three phase 380 to 480 Vac										
	Drive model: MD520-4TxxxB(S)-INT	0.4B(S)	0.7B(S)	1.1B(S)	1.5B(S)	2.2B(S)	3.0B(S)	3.7B(S)	5.5B(S)	7.5B(S)	11B(S)	15B(S)
Drive input	Frame size	T1*1						T2		T3		T4
Drive input	Rated input voltage	Three phase 380 to 480 Vac -15% to +10%										
Drive input	Rated input current [A]	1.8	2.4	3.7	4.6	6.3	9.0	11.4	16.7	21.9	32.2	41.3
Drive input	Power capacity [kVA]	2	2.8	4.1	5.0	6.7	9.5	12	17.5	22.8	33.4	42.8
Drive input	Rated input frequency	50/60 Hz ±5%										
Drive output	Applicable motor [kW]	0.4	0.75	1.1	1.5	2.2	3.0	3.7	5.5	7.5	11	15
Drive output	Output current [A]*2	1.5	2.1	3.1	3.8	5.1	7.2	9.0	13.0	17.0	25.0	32.0
Drive output	Default carrier frequency [kHz]	6	6	6	6	6	6	6	6	6	6	6
Drive output	Overload capacity	150% for 60 s										
Drive output	Max. output voltage	Three phase 380 to 480 Vac (proportional to input voltage)										
Drive output	Max. output frequency	599 Hz										
Braking resistor	Recommended power [kW]	0.08	0.14	0.22	0.3	0.44	0.6	0.74	1.1	1.5	2.2	3
Braking resistor	Minimum resistance [Ω]	96	96	96	96	64	64	32	32	32	24	24
	Braking unit	Built-in										
	Enclosure	IP 20										

Normal duty ratings, 110% overload

	Voltage class	Three phase 380 to 480 Vac										
	Drive model: MD520-4TxxxB(S)-INT	0.4B(S)	0.7B(S)	1.1B(S)	1.5B(S)	2.2B(S)	3.0B(S)	3.7B(S)	5.5B(S)	7.5B(S)	11B(S)	15B(S)
Drive input	Frame size	T1*1						T2		T3		T4
Drive input	Rated input voltage	Three phase 380 to 480 Vac -15% to +10%										
Drive input	Rated input current [A]	1.8	2.4	3.7	4.6	6.3	9.0	11.4	16.7	21.9	32.2	41.3
Drive input	Power capacity [kVA]	2	2.8	4.1	5.0	6.7	9.5	12	17.5	22.8	33.4	42.8
Drive input	Rated input frequency	50/60 Hz ±5%										
Drive output	Applicable motor [kW]	0.4	0.75	1.1	1.5	2.2	3.0	3.7	5.5	7.5	11	15
Drive output	Output current [A]*2	1.5	2.1	3.1	3.8	5.1	7.2	9.0	13.0	17.0	25.0	32.0
Drive output	Default carrier frequency [kHz]	6	6	6	6	6	6	6	6	6	6	6
Drive output	Overload capacity	110% for 60 s										
Drive output	Max. output voltage	Three phase 380 to 480 Vac (proportional to input voltage)										
Drive output	Max. output frequency	599 Hz										
Braking resistor	Recommended power [kW]	0.08	0.14	0.22	0.3	0.44	0.6	0.74	1.1	1.5	2.2	3
Braking resistor	Minimum resistance [Ω]	96	96	96	96	64	64	32	32	32	24	24
	Braking unit	Built-in										
	Enclosure	IP 20										

- 1 0.75/1.5/2.2 kW are the preferred stocking ratings. To learn more, please get in touch with your local Inovance representative.
- 2 Rated output current at default carrier frequency.

SPECIFICATIONS

Heavy duty ratings, 150% overload

Voltage class		Three phase 380 to 480 Vac										
Drive model:MD520-4Txxx(B)(S)(-T)-INT*3		18.5 (B)(S)(-T)	22 (B)(S)(-T)	30 (B)(S)	37 (B)(S)	45 (B)(S)	55 (B)(S)	75 (B)(S)	90 (S)	110 (S)	132 (S)	160 (S)
Frame size		T5		T6		T7		T8			T9	
Drive input	Rated input voltage	Three phase 380 to 480 Vac -15% to +10%										
	Rated input current [A]	43.4	51.3	57	69	89	106	139	164	196	240	287
	Power capacity [kVA]	45	54	52	63	81	97	127	150	179	220	263
	Rated input frequency	50/60 Hz ±5%										
Drive output	Applicable motor [kW]	18.5	22	30	37	45	55	75	90	110	132	160
	Output current [A]*2	37	45	60	75	91	112	150	176	210	253	304
	Default carrier frequency [kHz]	6	6	6	5	5	4	3	3	3	3	3
	Overload capacity	150% for 60 s										
	Max. output voltage	Three phase 380 to 480 Vac (proportional to input voltage)										
	Max. output frequency	599 Hz										
Braking resistor	Recommended power [kW]	4.5	4.5	6	7	9	11	15	18	22	26	32
	Minimum resistance [Ω]	24	24	19.2	14.8	12.8	9.6	6.8	11.4x2*4	7.7 x2*4	7.7 x2*4	2.8 x2*4
Braking unit		Built-in							MDBUN-60-5T x2	MDBUN-90-5T x2		MDBUN-200-5T x2
Enclosure		IP 20										

Normal duty ratings, 110% overload

Voltage class		Three phase 380 to 480 Vac										
Drive model:MD520-4Txxx(B)(S)(-T)-INT*3		18.5 (B)(S)(-T)	22 (B)(S)(-T)	30 (B)(S)	37 (B)(S)	45 (B)(S)	55 (B)(S)	75 (B)(S)	90 (S)	110 (S)	132 (S)	160 (S)
Frame size		T5		T6		T7		T8			T9	
Drive input	Rated input voltage	Three phase 380 to 480 Vac -15% to +10%										
	Rated input current [A]	43.4	51.3	57	69	89	106	139	164	196	240	287
	Power capacity [kVA]	45	54	52	63	81	97	127	150	179	220	263
	Rated input frequency	50/60 Hz ±5%										
Drive output	Applicable motor [kW]	18.5	22	30	37	45	55	75	90	110	132	160
	Output current [A]*2	37	45	60	75	91	112	150	176	210	253	304
	Default carrier frequency [kHz]	6	6	6	5	5	4	3	3	3	3	3
	Overload capacity	150% for 60 s										
	Max. output voltage	Three phase 380 to 480 Vac (proportional to input voltage)										
	Max. output frequency	599 Hz										
Braking resistor	Recommended power [kW]	4.5	4.5	6	7	9	11	15	18	22	26	32
	Minimum resistance [Ω]	24	24	19.2	14.8	12.8	9.6	6.8	11.4x2*4	7.7 x2*4	7.7 x2*4	2.8 x2*4
Braking unit		Built-in							MDBUN-60-5T x2	MDBUN-90-5T x2		MDBUN-200-5T x2
Enclosure		IP 20										

- 2 Rated output current at default carrier frequency.
- 3 -T in the type code of 18.5B and 22B models indicates built-in DC reactor
- 4 Minimum value of the resistance for each braking unit.

SPECIFICATIONS

Heavy duty ratings, 150% overload

	Voltage class	Three phase 380 to 480 Vac						
	Drive model: MD520-4Txxx(S)-INT*5	200(S)	220(S)	250(S)	280(S)	315(S)	355(S)	400(S)
Drive input	Frame size	T10		T11		T12		
	Rated input voltage	Three phase 380 to 480 Vac -15% to +10%						
	Rated input current [A]	365	410	441	495	565	617	687
	Power capacity [kVA]	334	375	404	453	517	565	629
	Rated input frequency	50/60 Hz ±5%						
Drive output	Applicable motor [kW]	200	220	250	280	315	355	400
	Output current [A]*2 Default	377	426	465	520	585	650	725
	carrier frequency [kHz]	3	3	3	3	3	3	3
	Overload capacity	150% for 60 s						
	Max. output voltage	Three phase 380 to 480 Vac (proportional to input voltage)						
	Max. output frequency	599 Hz						
Braking resistor	Recommended power [kW]	42	54	60	69	78	87	87
	Minimum resistance [Ω]	2.8 x2*4	2.8 x2*4	2.8 x3*4	2.8 x3*4	2.8 x3*4	2.8 x3*4	2.8 x3*4
	Braking unit	MDBUN-200-5T x2		MDBUN-200-5T x3				
	Enclosure	IP 00						

Normal duty ratings, 110% overload

	Voltage class	Three phase 380 to 480 Vac						
	Drive model: MD520-4Txxx(S)-INT*5	200(S)	220(S)	250(S)	280(S)	315(S)	355(S)	400(S)
Drive input	Frame size	T10		T11		T12		
	Rated input voltage	Three phase 380 to 480 Vac -15% to +10%						
	Rated input current [A]	456	507	559	624	708	782	840
	Power capacity [kVA]	417	464	511	571	647	715	768
	Rated input frequency	50/60 Hz ±5%						
Drive output	Applicable motor [kW]	250	280	315	355	400	450	500
	Output current [A]*2 Default	4655	520	585	650	725	820	880
	carrier frequency [kHz]	3	3	3	3	3	3	3
	Overload capacity	110% for 60 s						
	Max. output voltage	Three phase 380 to 480 Vac (proportional to input voltage)						
	Max. output frequency	599 Hz						
Braking resistor	Recommended power [kW]	42	54	60	69	78	87	87
	Minimum resistance [Ω]	2.8 x2*4	2.8 x2*4	2.8 x3*4	2.8 x3*4	2.8 x3*4	2.8 x3*4	2.8 x3*4
	Braking unit	MDBUN-200-5T x2		MDBUN-200-5T x3				
	Enclosure	IP 00						

- 2 Rated output current at default carrier frequency.
- 4 Minimum value of the resistance for each braking unit.
- 5 For the standard AC drive, we recommend motor cable lengths to be <100 m. Where your installation exceeds 100 m, the "L" version is an option with a built-in AC output reactor (1% voltage drop) which can help to overcome the effects of long cable installations. To discuss your application, contact your local Inovance representative.

SPECIFICATIONS

Heavy duty ratings, 150% overload

Voltage class		Three phase 200 - 240 Vac															
Drive model: MD520-2Txxx (B)(S)-INT		0.4 B(S)	0.7 B(S)	1.1 B(S)	1.5 B(S)	2.2 B(S)	3.7 B(S)	5.5 B(S)	7.5 B(S)	11 B(S)	15 B(S)	18.5 B(S)	22 B(S)	30 B(S)	37 B(S)	45 (S)	55 (S)
Frame size		T1				T2		T3	T4	T5	T6		T7		T8		
Drive input	Rated input voltage	Three phase 200 to 240 Vac -15% to +10%															
	Rated input current [A]	2.4	4.6	6.3	9	11.4	16.7	32.2	41.3	51.3	57	69	89	106	139	164	196
	Power capacity [kVA]	1.1	2.1	2.9	4.1	5.2	7.6	14.7	18.9	27	26.1	31.6	40.7	48.5	63.6	75	89.6
	Rated input frequency	50/60 Hz ±5%															
Drive output	Applicable motor [kW]	0.4	0.75	1.1	1.5	2.2	3.7	5.5	7.5	11	15	18.5	22	30	37	45	55
	Output current [A]*2 Default	2.1	3.8	5.1	7.2	9	13	25	32	45	60	75	91	112	150	176	210
	carrier frequency [kHz]	6	6	6	6	6	6	6	6	6	6	5	5	4	3	3	3
	Overload capacity	150% for 60 s															
	Max. output voltage	Three phase 200 to 240 Vac (proportional to input voltage)															
	Max. output frequency	599 Hz															
Braking resistor	Recommended power [kW]	0.09	0.16	0.25	0.34	0.5	0.8	1.3	1.7	2.3	3	3.9	4.6	5.5	6.8	5.0 x2	6.0 x2
	Minimum resistance [Ω]	48	48	32	32	16	16	12	12	12	9	7	6	5	4	5.5 x2*4	3.7 x2*4
Braking unit		Built-in														MDBUN-60-2T x2	MDBUN-90-2T x2
Enclosure		IP 20															

Heavy duty ratings, 110% overload

Voltage class		Three phase 200 - 240 Vac															
Drive model: MD520-2Txxx (B)(S)-INT		0.4 B(S)	0.7 B(S)	1.1 B(S)	1.5 B(S)	2.2 B(S)	3.7 B(S)	5.5 B(S)	7.5 B(S)	11 B(S)	15 B(S)	18.5 B(S)	22 B(S)	30 B(S)	37 B(S)	45 (S)	55 (S)
Frame size		T1				T2		T3	T4	T5	T6		T7		T8		
Drive input	Rated input voltage	Three phase 200 to 240 Vac -15% to +10%															
	Rated input current [A]	3.7	6.4	9.1	11.3	15.9	22.4	39.7	44	65.8	71	86	111	143	167	198	239
	Power capacity [kVA]	1.7	2.9	4.2	5.2	7.3	10.2	18.2	20.1	30.1	32.5	39.3	50.8	65.4	76.4	90.5	109.3
	Rated input frequency	50/60 Hz ±5%															
Drive output	Applicable motor [kW]	0.75	1.1	1.5	2.2	3.7	5.5	7.5	11	15	18.5	22	30	37	45	55	75
	Output current [A]*2 Default	3.1	5.1	7.2	9.0	13	17	32	37	60	75	91	112	150	176	210	253
	carrier frequency [kHz]	6	6	6	6	6	6	6	6	6	6	5	5	4	3	3	3
	Overload capacity	110% for 60 s															
	Max. output voltage	Three phase 200 to 240 Vac (proportional to input voltage)															
	Max. output frequency	599 Hz															
Braking resistor	Recommended power [kW]	0.09	0.16	0.25	0.34	0.5	0.8	1.3	1.7	2.3	3	3.9	4.6	5.5	6.8	5.0 x2	6.0 x2
	Minimum resistance [Ω]	48	48	32	32	16	16	12	12	12	9	7	6	5	4	5.5 x2*4	3.7 x2*4
Braking unit		Built-in														MDBUN-60-2T x2	MDBUN-90-2T x2
Enclosure		IP 20															

- 2 Rated output current at default carrier frequency.
- 4 Minimum value of the resistance for each braking unit.

Heavy duty ratings, 150% overload

Voltage class		One phase 200 - 240 Vac			
Drive model: MD520-4TxxxB(S)-INT		0.4B(S)	0.7B(S)	1.5B(S)	2.2B(S)
Frame size		T2			
Drive input	Rated input voltage	One phase 200 to 240 Vac -15% to +10%			
	Rated input current [A]	5.4	8.2	14	20
	Power capacity [kVA]	1.4	2.2	3.7	6
	Rated input frequency	50/60 Hz ±5%			
Drive output	Applicable motor [kW]	0.4	0.75	1.5	2.2
	Output current [A]*2	2.3	4.0	7.0	9.6
	Default carrier frequency [kHz]	6	6	6	6
	Overload capacity	150% for 60 s			
	Max. output voltage	Three phase 200 to 240 Vac (proportional to input voltage)			
	Max. output frequency	599 Hz			
Braking resistor	Recommended power [kW]	0.08	0.08	0.1	0.1
	Minimum resistance [Ω]	64	64	32	32
Recommended power [kW]		Built-in			
Minimum resistance [Ω]		IP 20			

- 2 Rated output current at default carrier frequency.

GENERAL WIRING DIAGRAM

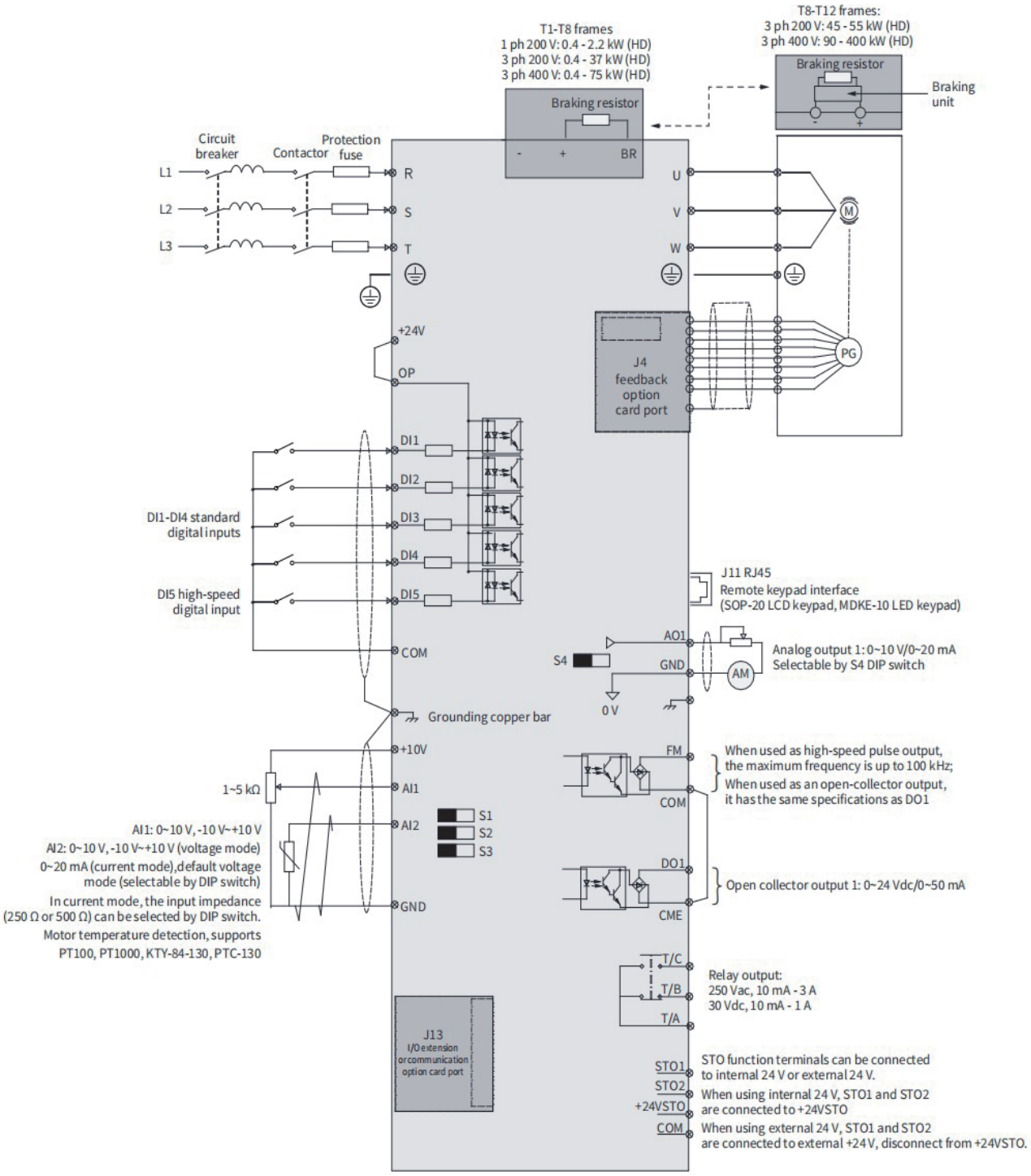

DIMENSIONS

MD520-4T0.4B(S)-INT to MD520-4T15B(S)-INT
MD520-2T0.4B(S)-INT to MD520-2T7.5B(S)-INT
MD520-2S0.4B(S)-INT to MD520-2S2.2B(S)-INT

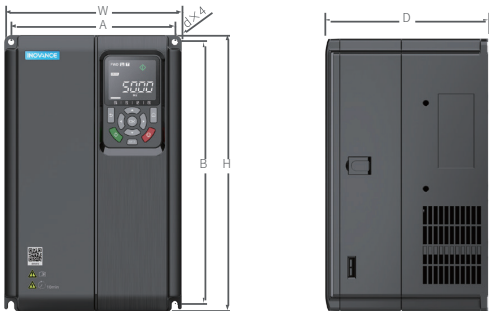

MD520-4T18.5B(S)-INT to MD520-4T37B(S)-INT
MD520-2T11B(S)-INT to MD520-2T18.5B(S)-INT

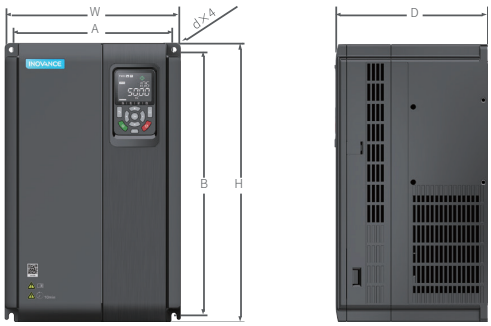

MD520-4T45B(S)-INT to MD520-4T160(S)-INT
MD520-2T22B(S)-INT to MD520-2T55(S)-INT

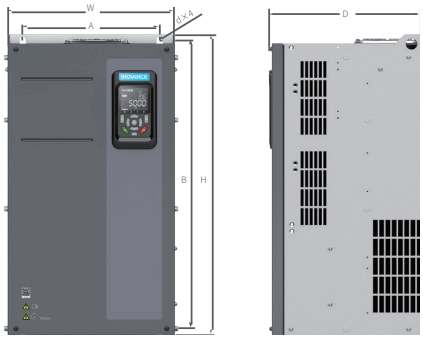

MD520-4T200(S)-INT to MD520-4T400(S)-INT

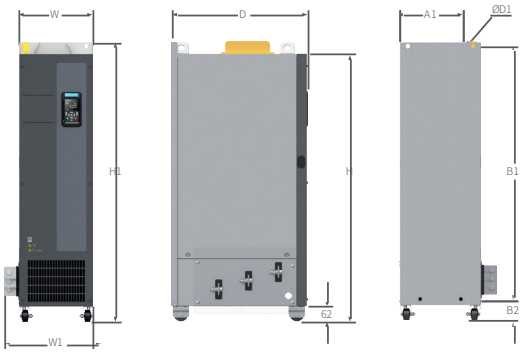

MD520-4T200(S)-L-INT to MD520-4T400(S)-L-INT

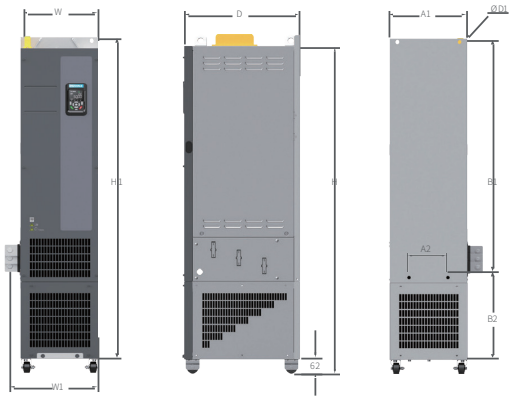

MD520 Model	Frame size	Dimensions (mm)										Mass (kg)
		A	A1	B	B1	H	H1	W	W1	D	D1	
MD520-4T1 .1B(S)-INT, MD520-4T1.5B(S)-INT, MD520-4T2.2B(S)-INT, MD520-4T3.0B(S)-INT, MD520-2T0.4B(S)-INT, MD520-2T0.7B(S)-INT, MD520-2T1.1B(S)-INT, MD520-2T1.5B(S)-INT	T1	119	/	189	/	200	/	130	/	152	Ø5	1.6
MD520-4T3.7B(S)-INT, MD520-4T5.5B(S)-INT, MD520-2S0.4B(S)-INT to MD520-2S2.2B(S)-INT, MD520-2T2.2B(S)-INT, MD520-2T3.7B(S)-INT	T2	119	/	189	/	200	/	130	/	152	Ø5	2.0
MD520-4T15B(S)-INT, MD520-2T7.5B(S)-INT	T3	128	/	238		250	/	140	/	170	Ø6	3.3
MD520-4T18.5B(S)-INT, MD520-4T22B(S)-INT, MD520-2T11B(S)-INT	T4	166	/	266	/	280	/	180	/	170	Ø6	4.3
MD520-4T30B(S)-INT, MD520-4T37B(S)-INT	T5	195	/	335	/	350	/	210	/	192	Ø6	10
MD520-4T30B(S)-INT, MD520-4T37B(S)-INT MD520-2T15B(S)-INT, MD520-2T18.5B(S)-INT	T6	230	/	380	/	400	/	250	/	220	Ø7	17.5
MD520-4T45B(S)-INT, MD520-4T55B(S)-INT MD520-2T22B(S)-INT, MD520-2T30B(S)-INT	T7	245	/	523	/	525	524	300	/	275	Ø10	35
MD520-4T75B(S)-INT, MD520-4T90(S)-INT, MD520-4T110(S)-INT MD520-2T37B(S)-INT, MD520-2T45(S)-INT, MD520-2T55(S)-INT	T8	270	/	560	/	554	580	388	/	315	Ø10	51.5
MD520-4T132(S)-INT, MD520-4T160(S)-INT	T9	320	/	890	/	874	915	400	/	320	Ø10	85
MD520-4T200(S)-INT, MD520-4T220(S)-INT MD520-4T200(S)-L-INT, MD520-4T220(S)-L-INT	T10	240 240	150 150	1035 1035	86 424	1086 1424	1134 1472	300 300	360 360	500 500	Ø13 Ø13	110 160
MD520-4T250(S)-INT, MD520-4T280(S)-INT MD520-4T250(S)-L-INT, MD520-4T280(S)-L-INT	T11	225 225	185 185	1175 1175	97 435	1248 1586	1248 1622	330 330	390 390	545 545	Ø13 Ø13	155 215
MD520-4T315(S)-INT, MD520-4T355(S)-INT, MD520-4T400(S)-INT, MD520-4T315(S)-L-INT, MD520-4T355(S)-L-INT,MD520-4T400(S)-L-INT	T12	240 240	200 200	1280 1280	101 432	1355 1683	1405 1733	340 340	400 400	545 545	Ø16 Ø16	185 245

OPTION CARDS AND MOUNTING POSITION

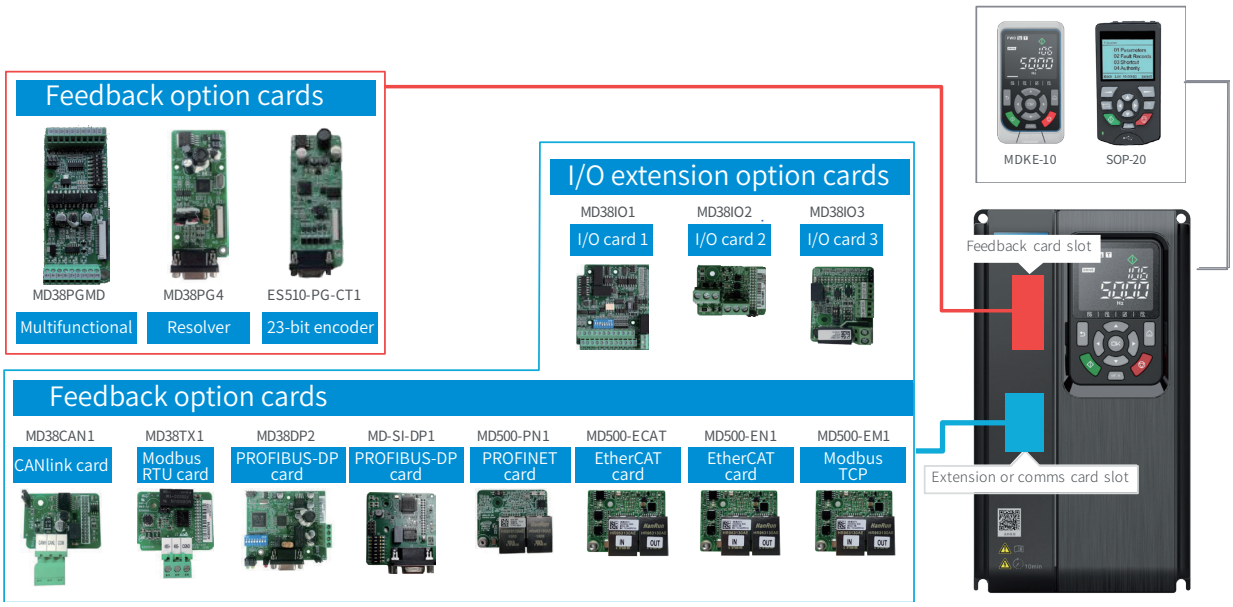

ACCESSORIES LIST

Category	Model	Function description	Suitable for
External braking units	MDBUN-60-5T	External braking unit, rated current 60 A, for supply input voltage 380 to 480 Vac AC drives.	T models: 90G
	MDBUN-90-5T	External braking unit, rated current 90 A, for supply input voltage 380 to 480 Vac AC drives.	T models: 110G - 132G
	MDBUN-200-5T	External braking unit, rated current 200 A, for supply input voltage 380 to 480 Vac AC drives.	T models: 160G - 450G
	MDBUN-60-2T	External braking unit, rated current 60 A, for supply input voltage 200 to 240 Vac AC drives.	2T models: 45G
	MDBUN-90-2T	External braking unit, rated current 90 A, for supply input voltage 200 to 240 VAC AC drives.	2T models: 55G
Keypads	MDKE-10	Remote LED keypad. Can be used as USB to RS485 adapter for the connection to the PC. Includes MDCAB cable.	All
	SOP-20	Remote multi-language LCD keypad. For parameter programming and monitoring, data copy. Keypad can be used as USB to RS485 adapter for the connection to the PC. Includes MDCAB cable.	All
	MDCAB	3 meter connection cable for remote keypad.	All
	MDCAB-1.5	1.5 meter connection cable for remote keypad.	All
	CP600-BASE1	Panel mounting base (only) for SOP-20 keypad. IP20 rating.	All
	SOP20-MP-IP20	Panel mounting base for SOP-20 keypad, including adapting metal plate and PCB protection plate. IP20 rating.	All
	SOP20-MP-IP54	Panel mounting base for SOP-20 keypad, including PCB protection plate and rubber seals. IP54 rating.	All
	MD580-AZJ1	Panel mounting base for MDKE-10. IP20 rating.	All
I/O extension cards	MD38IO1	I/O extension card 1, provides: 5x DI, 1x AI, 1x relay output, 1x DO, 1x AO, Modbus-RTU and CANlink.	Frame sizes T4-T12
	MD38IO2	I/O extension card 2, provides 3x extra DI terminals.	All
	MD38IO3	I/O extension card 3, provides 3x DI, 1x relay output, Modbus-RTU interface.	All
	MD500-ECAT	EtherCAT option card.	All
	MD500-EN1	Ethernet option card.	All
	MD38CAN1	CANlink/CANopen option card.	All
Fieldbus cards	MD38TX1	Modbus-RTU option card.	All
	MD38DP2	PROFIBUS-DP option card.	Frame sizes T4-T12
	MD500-EM1	Modbus TCP option card.	All
	MD-SI-DP1	PROFIBUS-DP option card (designed for smaller frames).	All
	MD500-PN1	PROFINET option card.	All
	MD38PG4	Option card for resolver (10 kHz excitation) with DB9 connector.	All
PG cards	MD38PGMD	Multifunctional encoder option card, compatible with differential, open-collector and push-pull encoder types. Supports differential output and open-collector output.	All
	ES510-PG-CT1	23-bit encoder card.	All
Mounting brackets	MD500-AZJ-A1T1	Through hole mounting bracket for frame T1.	Frame size T1
	MD500-AZJ-A1T2	Through hole mounting bracket for frame T2.	Frame size T2
	MD500-AZJ-A1T3	Through hole mounting bracket for frame T3.	Frame size T3
	MD500-AZJ-A1T4	Through hole mounting bracket for frame T4.	Frame size T4
	MD500-AZJ-A1T5	Through hole mounting bracket for frame T5.	Frame size T5
	MD500-AZJ-A1T6	Through hole mounting bracket for frame T6.	Frame size T6
	MD500-AZJ-A1T7	Through hole mounting bracket for frame T7.	Frame size T7
	MD500-AZJ-A1T8	Through hole mounting bracket for frame T8.	Frame size T8
	MD500-AZJ-A1T9	Through hole mounting bracket for frame T9.	Frame size T9
Guide rails	MD500-AZJ-A1T10	Guide rails for inserting in/ extracting from the cabinet - frame sizes T10 to T12.	Frame size T10-T12

MD800 - Compact AC MultiDrive

Comprehensive Functionality in a Compact Footprint

- Modular design (from 1 to 8 drives)
- 1 ph 200 V and 3 ph 220V/400 V supply
- Drive ratings: 200 W to 7.5 kW
- STO SIL3
- Choice of fieldbus protocols available

reddot award 2019 winner

STO SIL3

DESIGNED FOR CABINET SPACE SAVING - REDUCED INSTALLATION COSTS

Eight Inovance MD200 drives, each module' s footprint is: W 75 mm x H 180 mm

Footprint reduction
-50%

15 kW rectifier (2 option slots) | Dual 3.7 kW | Dual 2.2 kW | Dual 0.75 kW | Dual 0.75 kW

MD800 – FEATURES & FUNCTIONS

Comprehensive functionality:

- Individual STO SIL 3 for each drive
- Suitable for open loop asynchronous & PM synchronous motors
- +24 VDC control backup supply
- IP40 rated
- Remote LCD keypad (optional)
- Commissioning PC software available
- Dual rated: heavy duty (HD, G rating): 150% overload; normal duty (ND, P rating): 110% overload

High level, flexible connectivity:

- Built-in I/Os: 4 DI, 4 DI/DO, 2 AI, 1 RO
- Standard onboard communications: USB commissioning port, CAN, RS485

CANopen CANlink Modbus RTU

CANlink is an Inovance proprietary fieldbu

- Two expansion slots
  - I/O expansion cards
  - Fieldbus option cards:

EtherCAT EtherNet/IP PROFINET

Compact footprint for smaller cabinets

- Common height and depth: 182 mm x 160 mm
- Rectifier width: 99.5 mm
- Drive width: 49.5 mm

Reduced installation costs

- User-friendly pluggable connectors (spring type)
- Faster build time
- Reduced wiring
- User-friendly pluggable connectors (spring type)
- Fewer external components:
  - Common EMC filter (C2 compliant)
  - Input reactor
  - Fuses/MCCBs
  - Common built-in dynamic braking (variant)

Designed for durability:

- High level conformal coating (3C3 & 3S2)
- Operating temp range: -20 to +60° C (de-rating > 50° C)
- Operating altitude: up to 4,000 m (de-rating > 1,000 m)
- Separate cooling channel for heatsink

size: W 300 mm x H 182 mm

Two option slots

+24 VDC backup

STO SIL 3 on each drive

Reduced running costs via energy saving common DC bus

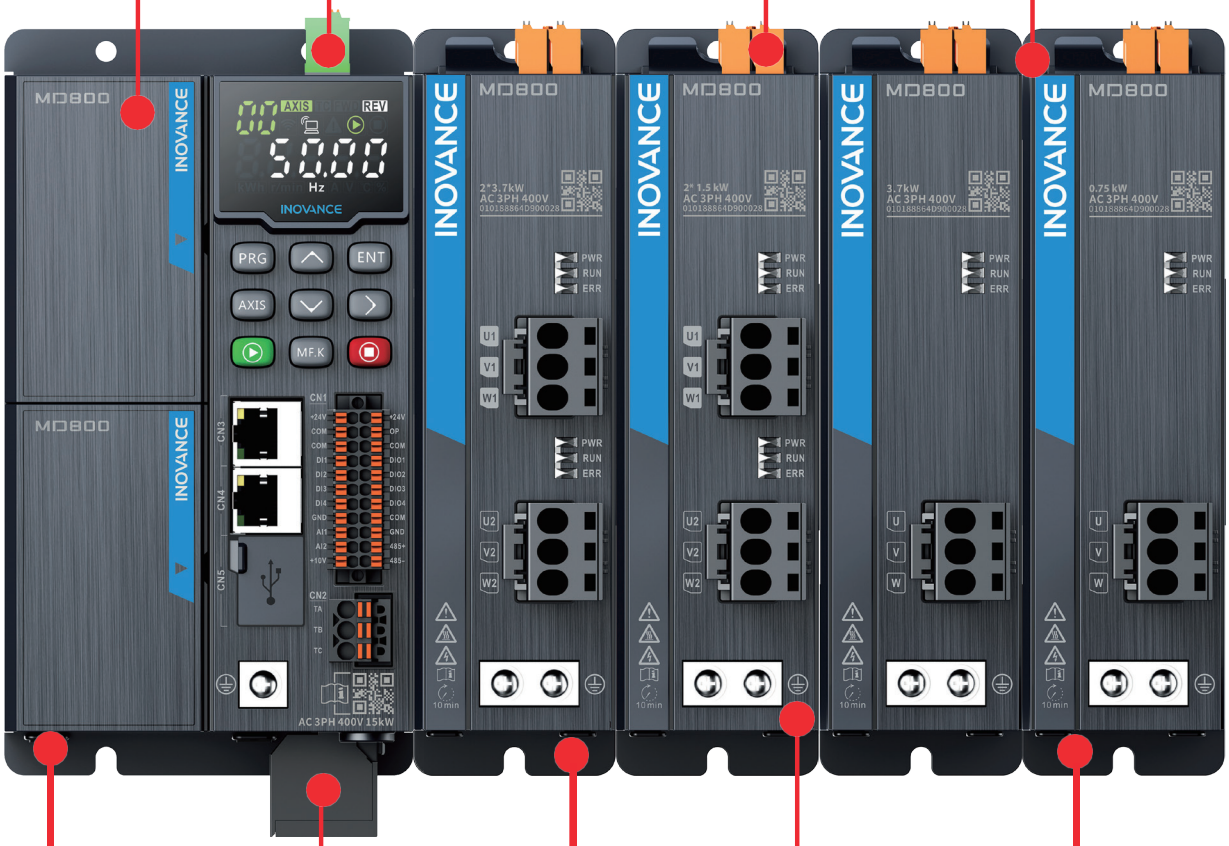

Mains input terminal and optional dynamic braking terminals

Cable support bracket for EMC screen grounding (optional accessory)

Common DC bus rectifier -
400 V (HD): 3.7 - 15 kW
400 V (ND): 5.5 - 18.5 kW
200 V (HD): 2.2 - 3.7 kW
200 V (ND): 3 - 4.4 kW

Dual drive modules -
400 V (HD): 0.4 - 3.7 kW
400 V (ND): 0.75 - 5.5 kW
200 V (HD): 0.2 - 2.2 kW
200 V (ND): 0.4 - 3.7 kW

Single drive modules -
400 V (HD): 0.4 - 7.5 kW
400 V (ND): 0.75 - 11 kW
200 V (HD): 0.2 - 2.2 kW
200 V (ND): 0.4 - 3.7 kW

ACCESSORIES

Model	Description
IO-M1	I/O expansion card: 8 DI, 8 DO, 2 AI
IO-R1	Relay expansion card: 8 relays with normally open contact
IO-R2	Relay expansion card: 4 relays with changeover contact
SI-PN1	PROFINET communication card
SI-ECAT1	EtherCAT communication card
SI-EN	Ethernet IP communication card
SOP-20	Remote LCD keypad (inc. 3 m cable)
MD800-PBJ100M-W1	Rectifier unit cable support bracket
MD800-PBJ50M-W1	Single or dual drive unit cable support bracket
MD800-AZB1	Mounting plate for easy assembly of an MD800 set in the electrical panel

· 3 ph 400 V input reactors available on request (3% impedance) For more information, please contact our local offices.

SINGLE DRIVE UNITS

Power (kW)		Model	Output AC current (A)		STO function
HD	ND		HD	ND	
400 V, DC supply voltage: 510-720 VDC					
0.4	0.75	MD800-1-4T1R8	1.8	2.1	No
0.75	1.5	MD800-1-4T3R4	3.4	4.6	
1.5	2.2	MD800-1-4T4R8	4.8	5.4	
2.2	3.7	MD800-1-4T5R5	5.5	9	
3.7	5.5	MD800-1-4T9R5	9.5	13	
5.5	7.5	MD800-1-4T13	13	17	
7.5	11	MD800-1-4T17	17	21	
0.4	0.75	MD800-1-4T1R8S	1.8	2.1	Yes
0.75	1.5	MD800-1-4T3R4S	3.4	4.6	
1.5	2.2	MD800-1-4T4R8S	4.8	5.4	
2.2	3.7	MD800-1-4T5R5S	5.5	9	
3.7	5.5	MD800-1-4T9R5S	9.5	13	
5.5	7.5	MD800-1-4T13S	13	17	
7.5	11	MD800-1-4T17S	17	21	
200 V, DC supply voltage: 270-360 VDC					
0.2	0.4	MD800-1-2T1R7	1.7	1.9	No
0.4	0.75	MD800-1-2T3	3	3.5	
0.75	1.5	MD800-1-2T5	5	8	
1.5	2.2	MD800-1-2T8	8	9.6	
2.2	3.7	MD800-1-2T11	11	17.6	
0.2	0.4	MD800-1-2T1R7S	1.7	1.9	Yes
0.4	0.75	MD800-1-2T3S	3	3.5	
0.75	1.5	MD800-1-2T5S	5	8	
1.5	2.2	MD800-1-2T8S	8	9.6	
2.2	3.7	MD800-1-2T11S	11	17.6	
3.7	5.5	MD800-1-2T17S	17	21	

DUAL DRIVE UNITS

Power (kW)		Model	Output AC current (A)		STO function
HD	ND		HD	ND	
400 V, DC supply voltage: 510-720 VDC					
0.4	0.75	MD800-2-4T1R8	1.8	2.1	No
0.75	1.5	MD800-2-4T3R4	3.4	4.6	
1.5	2.2	MD800-2-4T4R8	4.8	5.4	
2.2	3.7	MD800-2-4T5R5	5.5	9	
3.7	5.5	MD800-2-4T9R5	9.5	13	
0.4	0.75	MD800-2-4T1R8S	1.8	2.1	Yes
0.75	1.5	MD800-2-4T3R4S	3.4	4.6	
1.5	2.2	MD800-2-4T4R8S	4.8	5.4	
2.2	3.7	MD800-2-4T5R5S	5.5	9	
3.7	5.5	MD800-2-4T9R5S	9.5	13	
200 V, DC supply voltage: 270-360 VDC					
0.2	0.4	MD800-2-2T1R7	1.7	1.9	No
0.4	0.75	MD800-2-2T3	3	3.5	
0.75	1.5	MD800-2-2T5	5	8	
1.5	2.2	MD800-2-2T8	8	9.6	
2.2	3.7	MD800-2-2T11	11	17.6	
0.2	0.4	MD800-2-2T1R7S	1.7	1.9	Yes
0.4	0.75	MD800-2-2T3S	3	3.5	
0.75	1.5	MD800-2-2T5S	5	8	
1.5	2.2	MD800-2-2T8S	8	9.6	
2.2	3.7	MD800-2-2T11S	11	17.6	

RECTIFIER UNITS

Power (kW)		Model	Built-in dynamic braking
HD	ND		
3 ph 400 VAC input			
3.7	5.5	MD800-0-4T12	No
7.5	11	MD800-0-4T22	
15	18.5	MD800-0-4T41	
3.7	5.5	MD800-0-4T12B	Yes
7.5	11	MD800-0-4T22B	
15	18.5	MD800-0-4T41B	
1 ph 200 VAC input			
2.2	3	MD800-0-2S24	No
3.7	4.4	MD800-0-2S40	
2.2	3	MD800-0-2S24B	Yes
3.7	4.4	MD800-0-2S40B	
3 ph 220 VAC input			
7.5	11	MD800-0-2T41B	Yes

EMC FILTERS

Category	Filter model	Matched rectifier model
EMC filters (To achieve C2 level)	FIL800-4T-045	MD800-0-4T12*
		MD800-0-4T22*
		MD800-0-4T41*
	FIL800-2S-045	MD800-0-2S24*
		MD800-0-2S40*

MD290 - Universal AC Drive

For Fan & Pump Application

FEATURES & FUNCTIONS

- Open loop control
- Communication options :
  Modbbus-RTU
  PROFIBUS-DP
  Canopen
  CANLink
  PROFINET
- Rotational speed tracking startup
- Intelligent energy conservation
- PID control function
- Multi-point voltage and magnetic flux setting
- Long service life
- Independent air duct design to resist all kinds of harsh polluted environment

SPECIFICATIONS

Single-phase 200–240 V

Voltage class		Single-phase 200–240 VAC				
Drive model: MD290-2SxxxB-INT		0.4GB	0.7GB	1.5GB	2.2GB	3.0GB
Input	Rated input voltage	Single-phase 200–240 VAC -15% to +10%				
	Rated input current [A]	5.4	8.2	14	23	27
	Power capacity [kVA]	1.4	2.2	3.7	6	7.2
	Rated input frequency	50/60 Hz ±5%				
Output	Applicable motor [kW]	0.4	0.75	1.5	2.2	3
	Output current [A]*2	2.3	4	7	9.6	12
	Max. output voltage Max.	Single-phase 200–240 VAC(proportional to input voltage)				
Braking resistor	Recommended power [kW]	0.043	0.065	0.097	0.121	0.152

Three phase 200V~240V P type

Voltage class		Three phase 200 to 240 Vac								
Drive model: MD290-2TxxxB-INT		0.7P	1.1P	1.5P	2.2P	3.7P	5.5P	7.5P	11P	15P
Input	Rated input voltage	Three phase 200 to 240 Vac -15% to +10%								
	Rated input current [A]	3.7	6.4	9.1	11.3	15.9	22.4	39.7	44	65.8
	Power capacity [kVA]	1.7	2.9	4.2	5.2	7.3	10.2	18.2	20.1	30.1
	Rated input frequency	50/60 Hz ±5%								
Output	Applicable motor [kW]	0.75	1.1	1.5	2.2	3.7	5.5	7.5	11	15
	Output current [A]*2	3.1	5.1	7.2	9	13	17	32	37	60
	Max. output voltage	Three phase 200 to 240 Vac (proportional to input voltage)								
Braking resistor	Recommended power [kW]	0.06	0.088	0.112	0.14	0.207	0.273	0.491	0.561	0.76

Voltage class		Three phase 200 to 240 Vac							
Drive model: MD290-2Txxx(B)-INT		15P-T	18.5P	22P	30P	37P	45P	55P	75P
Input	Rated input voltage	Three phase 200 to 240 Vac -15% to +10%							
	Rated input current [A]	65.8	71	86	111	143	167	198	239
	Power capacity [kVA]	30.1	32.5	39.3	50.8	65.4	76.4	90.5	109.3
	Rated input frequency	50/60 Hz ±5%							
Output	Applicable motor [kW]	15	18.5	22	30	37	45	55	75
	Output current [A]*2	60	75	91	112	150	176	210	253
	Max. output voltage	Three phase 200 to 240 Vac (proportional to input voltage)							
Braking resistor	Recommended power [kW]	0.76	0.85	1.04	1.22	1.61	1.91	2.22	2.67

Three phase 200V~240V G type

Voltage class		Three phase 200 to 240 Vac					
Drive model: MD290-2TxxxB-INT		0.4G	0.7G	1.1G	1.5G	2.2G	3.7G
Input	Rated input voltage	Three phase 200 to 240 Vac -15% to +10%					
	Rated input current [A]	2.4	4.6	6.3	9	11.4	16.7
	Power capacity [kVA]	1.1	2.1	2.9	4.1	5.2	7.6
	Rated input frequency	50/60 Hz ±5%					
Output	Applicable motor [kW]	0.4	0.75	1.1	1.5	2.2	3.7
	Output current [A]*2	2.1	3.8	5.1	7.2	9	13
	Max. output voltage	Three phase 200 to 240 Vac (proportional to input voltage)					
Braking resistor	Recommended power [kW]	0.046	0.068	0.081	0.109	0.138	0.201

Voltage class		Three phase 200 to 240 Vac					
Drive model: MD290-2TxxxB-INT		5.5G	7.5G	11G	11G-T	15G	18.5G
Input	Rated input voltage	Three phase 200 to 240 Vac -15% to +10%					
	Rated input current [A]	32.2	41.3	59	51.3	57	69
	Power capacity [kVA]	14.7	18.9	27	27	26.1	31.6
	Rated input frequency	50/60 Hz ±5%					
Output	Applicable motor [kW]	5.5	7.5	11	11	15	18.5
	Output current [A]*2	25	32	45	45	60	75
	Max. output voltage	Three phase 200 to 240 Vac (proportional to input voltage)					
Braking resistor	Recommended power [kW]	0.355	0.454	0.551	0.551	0.694	0.815

Voltage class		Three phase 200 to 240 Vac				
Drive model: MD290-2Txxx(B)-INT		22G	30G	37G	45G	55G
Input	Rated input voltage	Three phase 200 to 240 Vac -15% to +10%				
	Rated input current [A]	89	106	139	164	196
	Power capacity [kVA]	40.7	48.5	63.6	75	89.6
	Rated input frequency	50/60 Hz ±5%				
Output	Applicable motor [kW]	22	30	37	45	55
	Output current [A]*2	91	112	150	176	210
	Max. output voltage	Three phase 200 to 240 Vac (proportional to input voltage)				
Braking resistor	Recommended power [kW]	1.01	1.21	1.57	1.81	2.14

Three phase 380V~480V G type

Voltage class		Three phase 380 to 480 Vac					
Drive model: MD290-2Txxx(B)-INT		0.4G	0.7G	1.1G	1.5G	2.2G	3.0G
Input	Rated input voltage	Three phase 380 to 480 Vac -15% to +10%					
	Rated input current [A]	1.8	2.4	3.7	4.6	6.3	9
	Power capacity [kVA]	2	2.8	4.1	5	6.7	9.5
	Rated input frequency	50/60 Hz ±5%					
Output	Applicable motor [kW]	0.4	0.75	1.1	1.5	2.2	3
	Applicable motor[HP]	0.5	1	1.5	2	3	4
	Output current [A]*2	1.5	2.1	3.1	3.8	5.1	7.2
	Max. output voltage	Three phase 380 to 480 Vac (proportional to input voltage)					
Braking resistor	Recommended power [kW]	0.039	0.046	0.057	0.068	0.081	0.109

Voltage class		Three phase 380 to 480 Vac					
Drive model: MD290-2Txxx(B)-INT		3.7G	5.5G	7.5G	11G	15G	18.5G
Input	Rated input voltage	Three phase 380 to 480 Vac -15% to +10%					
	Rated input current [A]	11.4	16.7	21.9	32.2	41.3	49.5
	Power capacity [kVA]	12	17.5	22.8	33.4	42.8	45
	Rated input frequency	50/60 Hz ±5%					
Output	Applicable motor [kW]	3.7	5.5	7.5	11	15	18.5
	Applicable motor[HP]	5	7.5	10	15	20	-
	Output current [A]*2	9	13	17	25	32	37
	Max. output voltage	Three phase 380 to 480 Vac (proportional to input voltage)					
Braking resistor	Recommended power [kW]	0.138	0.201	0.24	0.355	0.454	0.478

Voltage class		Three phase 380 to 480 Vac					
Drive model: MD290-2Txxx(B)-INT		18.5G-T	22G	22G-T	30G	37G	45G
Input	Rated input voltage	Three phase 380 to 480 Vac -15% to +10%					
	Rated input current [A]	43.4	59	51.3	57	69	89
	Power capacity [kVA]	45	54	54	52	63	81
	Rated input frequency	50/60 Hz ±5%					
Output	Applicable motor [kW]	18.5	22	22	30	37	45
	Applicable motor[HP]	-	-	-	-	-	-
	Output current [A]*2	37	45	45	60	75	91
	Max. output voltage	Three phase 380 to 480 Vac (proportional to input voltage)					
Braking resistor	Recommended power [kW]	0.478	0.551	0.551	0.694	0.815	1.01

Voltage class		Three phase 380 to 480 Vac					
Drive model: MD290-2Txxx(B)-INT		55G	75G	90G	110G	132G	160G
Input	Rated input voltage	Three phase 380 to 480 Vac -15% to +10%					
	Rated input current [A]	106	139	164	196	240	287
	Power capacity [kVA]	97	127	150	179	220	263
	Rated input frequency	50/60 Hz ±5%					
Output	Applicable motor [kW]	55	75	90	110	132	160
	Applicable motor[HP]	-	-	-	-	-	-
	Output current [A]*2	112	150	176	210	253	304
	Max. output voltage	Three phase 380 to 480 Vac (proportional to input voltage)					
Braking resistor	Recommended power [kW]	1.21	1.57	1.81	2.14	2.85	3.56

Three phase 380V~480V P type

Voltage class		Three phase 380 to 480 Vac					
Drive model: MD290-2Txxx(B)-INT		0.7P	1.1P	1.5P	2.2P	3.0P	3.7P
Input	Rated input voltage	Three phase 380 to 480 Vac -15% to +10%					
	Rated input current [A]	2.5	3.7	4.6	6.4	9.1	11.3
	Power capacity [kVA]	2.3	3.4	4.2	5.9	8.3	10.4
	Rated input frequency	50/60 Hz ±5%					
Output	Applicable motor [kW]	0.75	1.1	1.5	2.2	3.0	3.7
	Applicable motor[HP]	1	1.5	2	3	4	5
	Output current [A]*2	2.1	3.1	3.8	5.1	7.2	9.0
	Max. output voltage	Three phase 380 to 480 Vac (proportional to input voltage)					
Braking resistor	Recommended power [kW]	0.048	0.06	0.068	0.088	0.112	0.14

Voltage class		Three phase 380 to 480 Vac					
Drive model: MD290-2Txxx(B)-INT		5.5P	7.5P	11P	15P	18.5P	22P
Input	Rated input voltage	Three phase 380 to 480 Vac -15% to +10%					
	Rated input current [A]	15.9	22.4	32.9	39.7	44	59
	Power capacity [kVA]	15.5	20.5	30.2	38.2	44.4	54
	Rated input frequency	50/60 Hz ±5%					
Output	Applicable motor [kW]	5.5	7.5	11	15	18.5	22
	Applicable motor[HP]	7.5	10	15	20	25	-
	Output current [A]*2	13	17	25	32	37	45
	Max. output voltage	Three phase 380 to 480 Vac (proportional to input voltage)					
Braking resistor	Recommended power [kW]	0.207	0.273	0.388	0.491	0.561	0.616

General wiring diagram

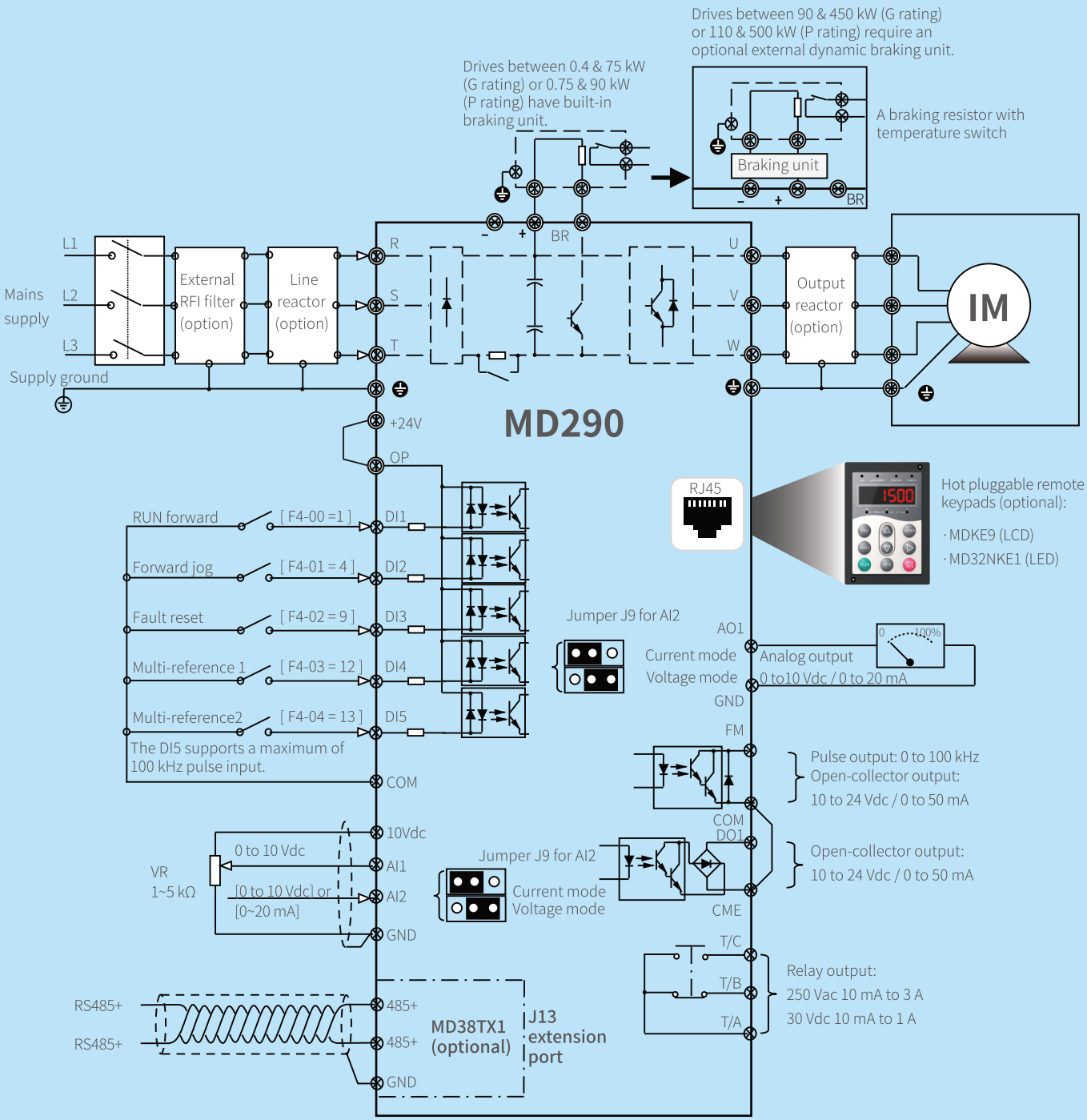

Note: This wiring diagram shows the digital inputs used in NPN (SINK) configuration. They can be used also as PNP (SOURCE) configuration.

Dimensions

MD290T0.4G/0.7PB-INT to MD290T15G/18.5PB-INT
MD290-2T0.4G/0.7PB-INT to MD290-2T7.5G/11PB-INT

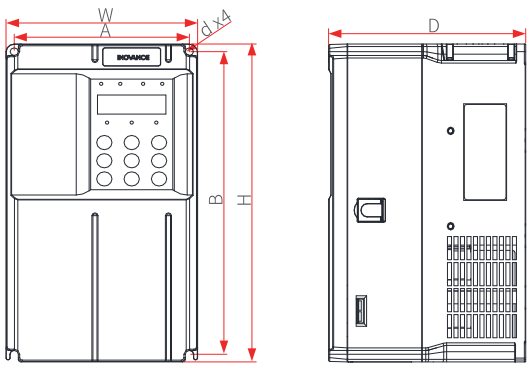

MD290T18.5G/22P(B)-INT to MD290T37G/45P(B)-INT
MD290-2T11G/15P(B)-INT to MD290-2T18.5G/22P(B)-INT

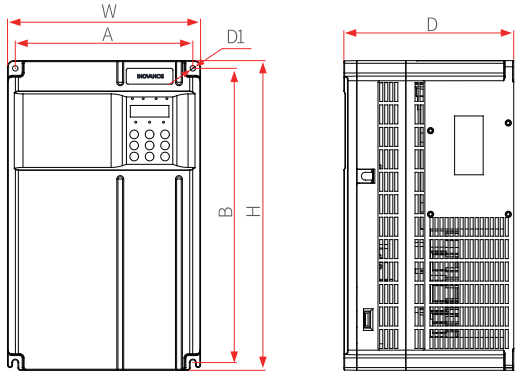

MD290T45G/55P(B)-INT to MD290T160G/200P-INT
MD290-2T22G/30P(B)-INT to MD290-2T55G/75P-INT

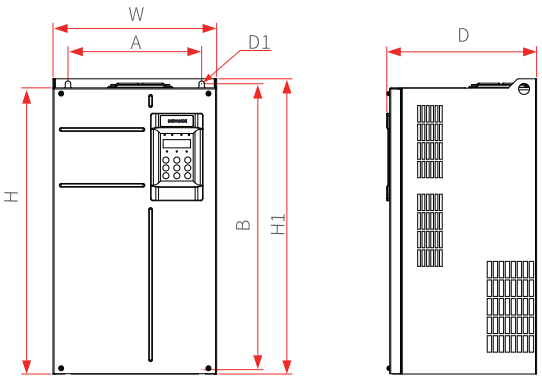

MD290T200G-INT to MD290T450G-INT
MD290T220P-INT to MD290T500P-INT

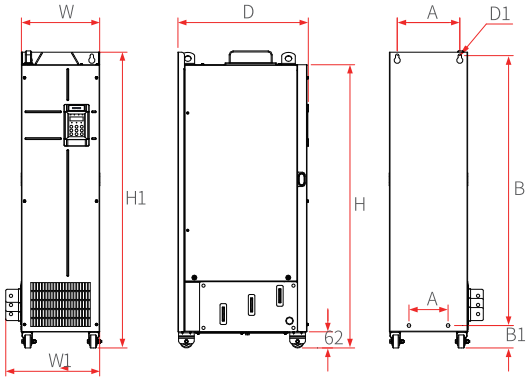

MD290T200G-L-INT to MD290T450G-L-INT
MD290T220P-L-INT to MD290T500P-L-INT

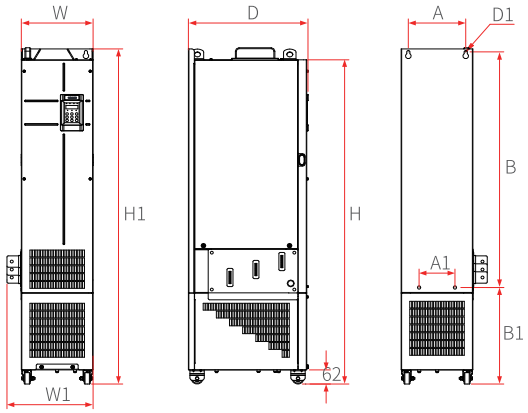

MD290 model	Frame size	Dimensions (mm)										Mass (kg)
		A	A1	B	B1	H	H1	W	W1	D	D1	
MD290T0.4G/0.7PB-INT, MD290T0.7G/1.1PB-INT, MD290T1.1G/1.5PB-INT MD290T1.5G/2.2PB-INT, MD290T2.2G/3.0PB-INT, MD290T3.0G/3.7PB-INT MD290-2T0.4G/0.7PB-INT, MD290-2T0.7G/1.1PB-INT, MD290-2T1.1G/1.5PB-INT, MD290-2T1.5G/2.2PB-INT	T1	119	/	189	/	**200**	/	**130**	/	**152**	Ø5	1.6
MD290T3.7G/5.5PB-INT, MD290T5.5G/7.5PB-INT MD290-2T2.2G/3.7PB-INT, MD290-2T3.7G/5.5PB-INT	T2	119	/	189	/	**200**	/	**130**	/	**162**	Ø5	2.0
MD290T7.5G/11PB-INT, MD290T11G/15PB-INT, MD290-2T5.5G/7.5PB-INT	T3	128	/	238	/	**250**	/	**140**	/	**170**	Ø6	3.3
MD290T15G/18.5PB-INT, MD290-2T7.5G/11PB-INT	T4	166	/	266	/	**280**	/	**180**	/	**170**	Ø6	4.3
MD290T18.5G/22P(B)-INT, MD290T22G/30P(B)-INT, MD290-2T11G/15P(B)-INT	T5	195	/	335	/	**350**	/	**210**	/	**192**	Ø6	10
MD290T30G/37P(B)-INT, MD290T37G/45P(B)-INT MD290-2T15G/18.5P(B)-INT, MD290-2T18.5G/22P(B)-INT	T6	230	/	380	/	**400**	/	**250**	/	**220**	Ø7	17.5
MD290T45G/55P(B)-INT, MD290T55G/75P(B)-INT MD290-2T22G/30P(B)-INT, MD290-2T30G/37P(B)-INT	T7	245	/	523	/	525	**542**	**300**	/	**275**	Ø10	35
MD290T75G/90P(B)-INT, MD290T90G/110P-INT, MD290T110G/132P-INT MD290-2T37G/45P(B)-INT, MD290-2T45G/55P-INT, MD290-2T55G/75P-INT	T8	270	/	560	/	554	**580**	**338**	/	**315**	Ø10	51.5
MD290T132G/160P-INT, MD290T160G/200P-INT	T9	320	/	890	/	874	**915**	**400**	/	**320**	Ø10	85
MD290T200G-INT, MD290T220P-INT, MD290T220G-INT, MD290T250P-INT MD290T280P-INT	T10	240	150	1,035	86	1,086	**1,134**	300	**360**	**500**	Ø13	110
MD290T200G-L-INT, MD290T220P-L-INT, MD290T220G-L-INT, MD290T250P-L-INT, MD290T280P-L-INT		240	150	1,035	424	1,424	**1,472**	300	**360**	500	Ø13	160
MD290T250G-INT, MD290T280G-INT, MD290T315P-INT, MD290T355P-INT	T11	225	185	1,175	97	1,248	**1,284**	330	**390**	**545**	Ø13	155
MD290T250G-L-INT, MD290T280G-L-INT, MD290T315P-L-INT, MD290T355P-L-INT		225	185	1,175	435	1,586	**1,622**	330	**390**	**545**	Ø13	215
MD290T315G-INT, MD290T355G-INT, MD290T400P-INT, MD290T400G-INT, MD290T450P-INT, MD290T450G-INT, MD290T500P-INT	T12	240	200	1,280	101	1,355	**1,405**	340	**400**	**545**	Ø16	185
MD290T315G-L-INT, MD290T355G-L-INT, MD290T400P-L-INT, MD290T400G-L-INT, MD290T450P-L-INT, MD290T450G-L-INT, MD290T500P-L-INT		240	200	1,280	432	1,683	**1,733**	340	**400**	**545**	Ø16	245

Extension cards and mounting position

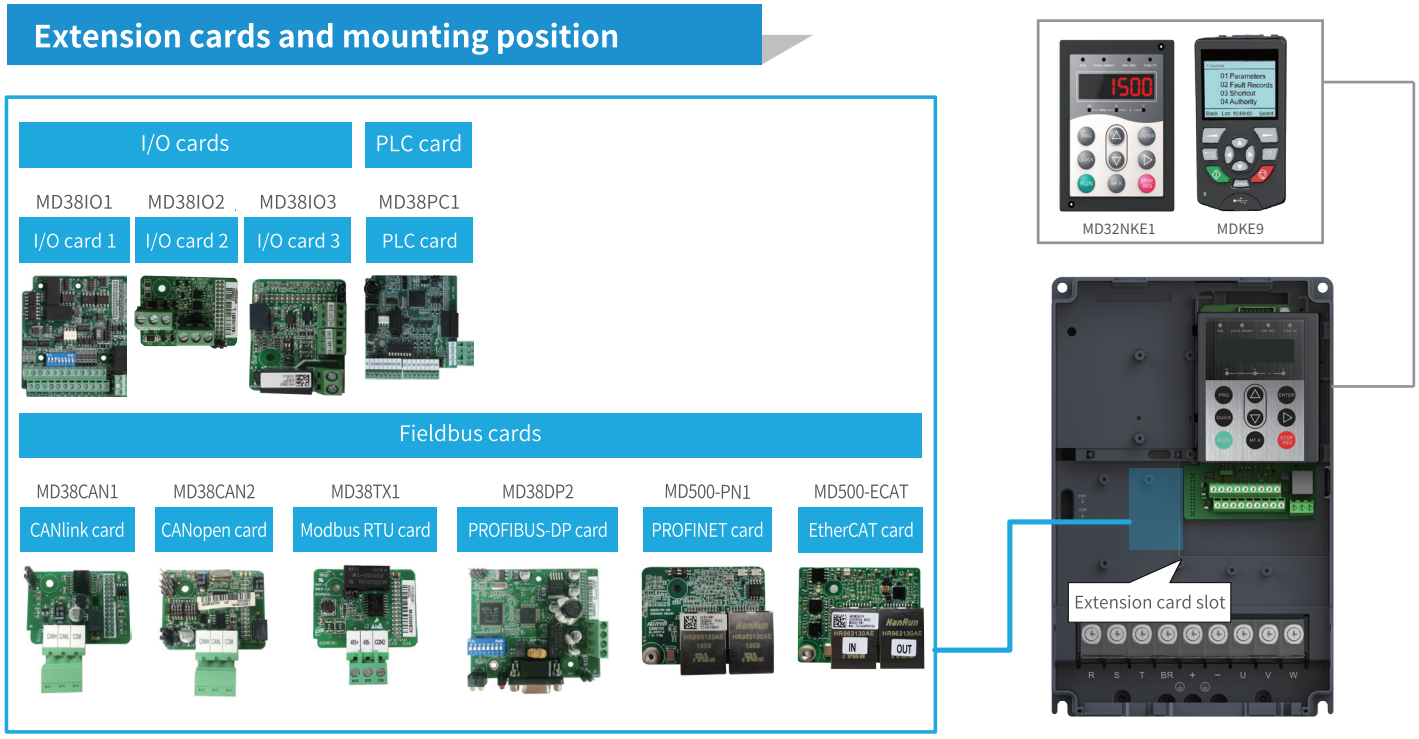

PC software tools

InoDriveShop

InoDriveShop is Inovance's PC-based software offering. It is based on a familiar Windows interface. InoDriveShop can upload and download drive parameters, and features a variety of other functions, such as a real-time oscilloscope

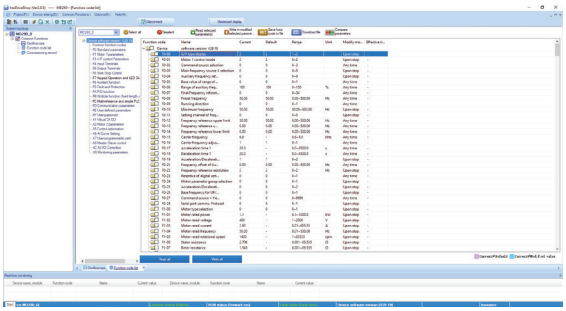

Parameter uploading/downloading

Multi-drive, multi-channel oscilloscope

Accessories list

Category	Model	Function description	Suitable for
External braking units	MDBUN-60-2T	External braking unit, rated current 60 A, for supply input voltage 200 to 240 Vac AC drives.	2T models: 45G - 55G
	MDBUN-200-5T	External braking unit, rated current 200 A, for supply input voltage 380 to 480 Vac AC drives.	T models: 200G - 450G
	MDBUN-60-5T	External braking unit, rated current 60 A, for supply input voltage 380 to 480 Vac AC drives.	T models: 90G - 110G
	MDBUN-90-5T	External braking unit, rated current 90 A, for supply input voltage 380 to 480 Vac AC drives.	T models: 132G - 160G
Keypads	MD32NKE1	Remote LED keypad. Includes MDCAB cable.	All
	MDKE9	Remote LCD keypad. For parameter programming and monitoring, data copy (for various MD series). Includes MDCAB cable.	All
	MDCAB	3 meter connection cable for remote keypad.	All
	MDCAB-1.5	1.5 meter connection cable for remote keypad.	All
I/O cards	MD38IO1	I/O extension card 1, provides: 5x DI, 1x AI, 1x relay output, 1x DO, 1x AO, Modbus-RTU and CANlink.	Frame sizes T4-T12
	MD38IO2	I/O extension card 2, provides 3x extra DI terminals.	All
	MD38IO3	I/O extension card 3, provides 3x DI, 1x relay output, Modbus-RTU interface.	All
PLC card	MD38PC1	PLC card, compatible with Inovance PLC.	Frame sizes T4-T12
Fieldbus cards	MD500-ECAT	EtherCAT communication card.	All
	MD38CAN1	CANlink communication card, supports only CANlink.	All
	MD38CAN2	CANopen communication card, supports only CANopen.	All
	MD38TX1	Modbus-RTU communication card.	All
	MD38DP2	PROFIBUS-DP communication card.	Frame sizes T4-T12
	MD500-PN1	PROFINET communication card.	All
PC comms kit	MDPCKIT02	Kit for connection with a personal computer, to be used with PC software tools.	All
Mounting brackets	MD500-AZJ-A1T1	Through hole mounting bracket - MD290/MD500 for frame T1.	Frame size T1
	MD500-AZJ-A1T2	Through hole mounting bracket - MD290/MD500 for frame T2.	Frame size T2
	MD500-AZJ-A1T3	Through hole mounting bracket - MD290/MD500 for frame T3.	Frame size T3
	MD500-AZJ-A1T4	Through hole mounting bracket - MD290/MD500 for frame T4.	Frame size T4
	MD500-AZJ-A1T5	Through hole mounting bracket - MD290/MD500 for frame T5.	Frame size T5
	MD500-AZJ-A1T6	Through hole mounting bracket - MD290/MD500 for frame T6.	Frame size T6
	MD500-AZJ-A1T7	Through hole mounting bracket - MD290/MD500 for frame T7.	Frame size T7
	MD500-AZJ-A1T8	Through hole mounting bracket - MD290/MD500 for frame T8.	Frame size T8
	MD500-AZJ-A1T9	Through hole mounting bracket - MD290/MD500 for frame T9.	Frame size T9
Guide Rails	MD500-AZJ-A3T10	Guide rails for inserting in/ extracting from the cabinet - frame sizes T10 to T12.	Frame sizes T10-T12

INOVANCE

บริษัท นานดีอินเตอร์เทรด จำกัด
NANDEE INTER-TRADE CO., LTD.
314,316,318,320,322 ซอยจันทน์32 ถนนจันทน์ แขวงทุ่งวัดดอน เขตสาทร กทม. 10120

: 0-2675-8239
: @nandeeintertrade
: nandeeintertrade
: www.nandee.co.th
: marketing@nandee.co.th
sales@nandee.co.th

010225500