Accelerating the construction of smart factories with

CC-Link IE TSN

Supported Products Lineup

FASTECH

Fast Accurate Smooth Motion

FASTECH Brand Introduction

Series	Feature
Ezi-SERVO® Closed Loop Stepping System	• Closed Loop Stepping System • Compatible with Field Networks (EtherCAT, CC-Link IE TSN, Ethernet, PROFINET) • Tuning Not Required, No Hunting • High Resolution Encoder(4,000 ~ 20,000 P/R), Fast Response • Low Heat Generation, High Torque • Drive Line-up (Field Network & pulse input drive, Standard, Mini, Multi-axes & Motor+Drive Integrated type) • Motor Line-up (□20 mm ~ □86 mm, Incremental & Batteryless Absolute Encoder) • Options (Brake, Gearbox)
Ezi-STEP® Micro Stepping System	• Microstepping System • Compatible with Field Networks (Ethernet, EtherCAT, CC-Link IE TSN, PROFINET) • Software Damping (Resonance & Vibration Suppression) • High Torque • Drive Line-up (Field Network & pulse input drive, Standard, Mini, Multi-axes & Motor+Drive Integrated type) • Motor Line-up (□20 mm ~ □86 mm) • Options (Brake)
Ezi-POS® Servo Control System	• Low-Voltage Servo Control System • Compatible with Field Networks (EtherCAT, CC-Link IE TSN, Ethernet, PROFINET) • DC Power Supply Input (DC 12 ~ 48 V) • Auto-tuning • Torque-Off Function • Various Motor Options (BLDC Motor, Servo Motor, Linear Motor, VCM, etc) • Various Position Sensor Options (Incremental/Absolute Encoders)
Ezi-SPEED® BLDC Motor Speed Control System	• BLDC Motor Speed Control System • Compatible with Field Networks (EtherCAT, CC-Link IE TSN, Ethernet, PROFINET, Modbus-RTU, Modbus-TCP) • Power supply input (AC 200 ~ 240 V, DC 12 ~ 48 V) • Compact · Light Weight · High Power · High Efficiency Brushless Motor • Wide Speed Range (50 ~ 4,000 r/min) • Stable Speed Regulation (±0.2 %) • BLDC Motor Line-up (30, 60, 120, 200, 400 W)
Ezi-IO® Network Input/Output	• Remote Input/Output Modules - DIO(Digital Input/Output) Series - AD(Analog-to-Digital Converter) Series - DA(Digital-to-Analog Converter) Series - CNT(High Speed Pulse Counter) Series • Compatible with Field Networks (EtherCAT, CC-Link IE TSN, Ethernet, PROFINET) • Simple and Easy Wiring • DIN Rail Mounting
Ezi-Robo® Precise Actuator System	• Precise Positioning Actuator System • Unit Solution Combining Ezi-SERVO + Actuator • Actuator Line-up (Compact Linear Actuator, Integrated guide-rail actuator, Vacuum Linear Rotary actuator, Hollow Rotary Table) • Compatible with Field Networks (EtherCAT, Ethernet, CC-Link IE TSN, PROFINET, Pulse Input)

CC-LinkIE TSN Supported Products Lineup

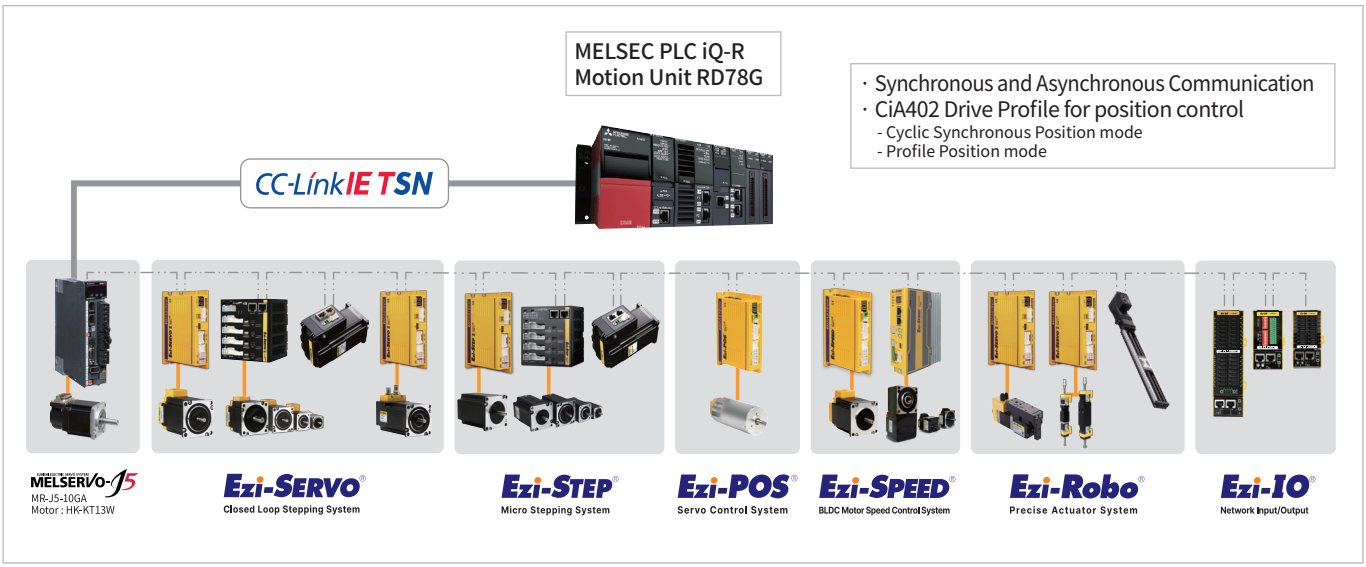

CC-Link IE TSN Compatible Products Lineup

Series	Product	Feature	Image
Ezi-SERVO® Closed Loop Stepping System	Ezi-SERVOII CC-Link IE TSN (Closed Loop Stepping System)	• CC-Link IE TSN-compatible Closed Loop Stepping System • CiA402 Drive Profile • Torque-Off Function • Tuning Not Required, No Hunting • High Resolution Encoder, Fast Response • Low Heat Generation, High Torque	P.4
	Ezi-SERVOII CC-Link IE TSN ABS (Closed Loop Stepping System + Absolute Encoder)	• CC-Link IE TSN-compatible Closed Loop Stepping System • CiA402 Drive Profile Support • Long Life Cycle with Electronic Battery-less Multi-turn Absolute Encoder (Multi-turn : 16 bits, Single-turn : Max. 20,000 P/R) • No External Sensors Required, Simple Wiring • No Battery Replacement Required, Easy Maintenance • Torque Off Function Supported	P.6
	Ezi-SERVOII CC-Link IE TSN ALL (Motor + Encoder + Drive + CC-Link IE TSN Integrated Type)	• CC-Link IE TSN-compatible Closed Loop Stepping System • CiA402 Drive Profile • Motor + Drive Integrated • Space Saving, Reduced Wiring • Tuning Not Required, No Hunting • High Resolution Encoder, Fast Response • Low Heat Generation, High Torque	P.8 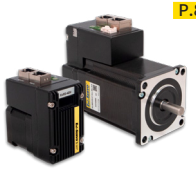
	Ezi-SERVOII CC-Link IE TSN 4X (Compact 4 Axis Drive)	• CC-Link IE TSN-compatible Closed Loop Stepping System • CiA402 Drive Profile • Compact Multi-Axis Drive (up to 4 axes) • Space Saving, Reduced Wiring • Tuning Not Required, No Hunting • High Resolution Encoder, Fast Response • Low Heat Generation, High Torque	P.10
	Ezi-SERVOII CC-Link IE TSN 4X ABS (Compact 4 Axis Drive + Absolute Encoder)	• CC-Link IE TSN-compatible Closed Loop Stepping System • CiA402 Drive Profile Support • Compact Multi-Axis Drive (Max. 4-Axis) • Long Life Cycle with Electronic Battery-less Multi-turn Absolute Encoder (Multi-turn : 16 bits, Single-turn : Max. 20,000 P/R) • No Battery Replacement Required, Easy Maintenance • No External Sensors Required, Simple Wiring	P.12
Ezi-STEP® Micro Stepping System	Ezi-STEPII CC-Link IE TSN (Micro Stepping System)	• CC-Link IE TSN-compatible Microstepping System • CiA402 Drive Profile • Torque-Off Function • Software Damping (Resonance & Vibration Suppression) • High Torque	P.14
	Ezi-STEPII CC-Link IE TSN ALL (Motor + Drive + CC-Link IE TSN Integrated Type)	• CC-Link IE TSN-compatible Microstepping System • CiA402 Drive Profile Support • Software Damping (Resonance & Vibration Suppression) • Motor + Drive Integrated • Space Saving, Reduced Wiring	P.16
	Ezi-STEPII CC-Link IE TSN 4X (Compact 4 Axis Drive)	• CC-Link IE TSN-compatible Microstepping System • CiA402 Drive Profile Support • Software Damping (Resonance & Vibration Suppression) • Compact Multi-Axis Drive (Max. 4-Axis) • Space Saving, Reduced Wiring	P.18
Ezi-SPEED® BLDC Motor Speed Control System	Ezi-SPEED CC-Link IE TSN DC (BLDC Motor Speed Control System)	• CC-Link IE TSN-compatible Low Voltage BLDC Motor Speed Control System • DC Power Input (DC 12 ~ 48 V) • Auto-tuning • Wide Speed Range (50 ~ 4,000 r/min) • Stable Speed Regulation (±0.2 %)	P.20
	Ezi-SPEED CC-Link IE TSN AC (BLDC Motor Speed Control System)	• CC-Link IE TSN-compatible BLDC Motor Speed Control System • AC Power Supply Input (AC 200 ~ 240 V) • Compact, Light Weight. High Power, High Efficiency Brushless Motor • Wide Speed Range (50 ~ 4,000 r/min) • Stable Speed Regulation (±0.2 %) • BLDC Motor Line-up (30, 60, 120, 200, 400 W)	P.22

CC-Link IE TSN Compatible Products Lineup

Series	Product	Feature	Image
Ezi-POS® Servo Control System	Ezi-POS CC-Link IE TSN (Low-Voltage Servo Control System)	• CC-Link IE TSN-compatible Low-Voltage Servo Control System • CiA402 Drive Profile • DC Power Supply Input (DC 12 ~ 48 V) • Auto-tuning • Torque-Off Function • Various Motor Options (BLDC Motor, Servo Motor, Linear Motor, VCM, etc) • Various Position Sensor Options (Incremental/Absolute Encoders)	P.24 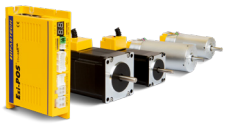
Ezi-IO® Network Input/Output	Ezi-IO CC-Link IE TSN DIO (Digital Input/Output Module)	• CC-Link IE TSN-compatible Digital I/O Module • CC-Link IO Map • Input Filter Function • Simple and Easy Wiring • DIN Rail Mounting	P.26
Ezi-Robo® Precise Actuator System	Ezi-Robo IGH (Integrated Guide-rail High-rigidity Actuator)	• Slider Type Electric Actuator with Stepping Motor & Ball Screw • High Strength Steel Frame • Repeatability (±0.005 mm) • High Resolution Encoder (Max. 20,000 P/R) • Size Line-up (IGH15: 30 x 15 mm, IGH23: 50.5 x 23 mm, IGH30: 60.5 x 30 mm)	P.28
	Ezi-Robo IGS (Integrated Guide-rail Actuator)	• Slider Type Electric Actuator with Stepping Motor & Ball Screw • Repeatability (±0.005 mm) • High Resolution Encoder (Max. 20,000 P/R) • Size Line-up (IGS30: 37 x 29 mm, IGS40: 42 x 38 mm, IGS50: 52 x 45 mm, IGS60: 60 x 45 mm)	P.30
	Ezi-Robo VZR (Vacuum + Linear + Rotary Actuator)	• Slim Actuator with Hollow Shaft Motor & Ball Screw Spline • Vacuum(V) + Linear(Z) + Rotary(R), 3-in-1 Actuator • Repeatability (Z Axis: ±0.01 mm / R Axis: ±0.1˚) • High Resolution Encoder (Max. 20,000 P/R) • Size Line-up (28 mm, 42 mm)	P.32
	Ezi-Robo CLA (Compact Linear Actuator)	• Compact Linear Actuator with Hollow Shaft Motor & Ball Screw • Repeatability (±0.01 mm), Lost Motion (≤ 0.05 mm) • High Resolution Encoder (Max. 20,000 P/R) • Size Line-up (20 mm, 28 mm, 42 mm, 56 mm)	P.34
	Ezi-Robo HG (Hollow Rotary Index Table)	• Hollow Rotary Index Table with Stepping Motor • Repeatability (±10 arcsec) • Hollow Diameter (Max. Ø85 mm) • Permissible Torque (Max. 170 N·m) • Axial Load (Max. 4000 N) • High Resolution Encoder (Max. 20,000 P/R) • Size Line-up (□60 mm, □100 mm, □130 mm, □170 mm)	P.36

Ezi-SERVO® II CC-Link IE TSN

Closed Loop Stepping System

- CC-Link IE TSN-compatible Closed Loop Stepping System
- CiA402 Drive Profile
- Torque-Off Function
- Tuning Not Required, No Hunting
- High Resolution Encoder, Fast Response
- Low Heat Generation, High Torque

Specifications

Model		Ezi-SERVOII-CT
Main Power Supply		DC 24 V ± 10 %
Control Power Supply		DC 24 V ± 10 %
Speed Control Range		0 ~ 3,000 r/min
Encoder Resolution [P/R]		4,000 / 10,000 / 16,000 / 20,000
Digital Input		3 dedicated inputs (LIMIT+, LIMIT-, ORIGIN) and 6 user inputs
Digital Output		5 user outputs and 1 Brake signal output
Torque-Off Function		2 inputs (TQOFF1, TQOFF2), 1 output (TQMON)
CC-Link IE TSN	Communication Protocol	CC-Link IE TSN Class B
	Operation Mode	CiA402 Drive Profile : Cyclic Synchronous Position Mode (CSP) Profile Position Mode (PP) Homing Mode (HM)
	Synchronization	Minimum Cycle Time: 250 µs / Synchronous Comm. (CSP, PP, HM) / Asynchronous Comm. (PP, HM)
Status Display	7-SEG	2 digits: IP Address or Error Code
	LED	Network status: Run, Error Drive status: Power, In-Position, Servo On, Alarm

Module Overview

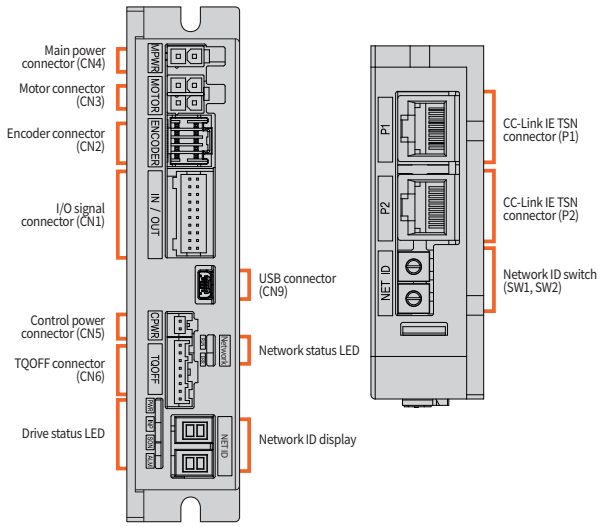

Dimension

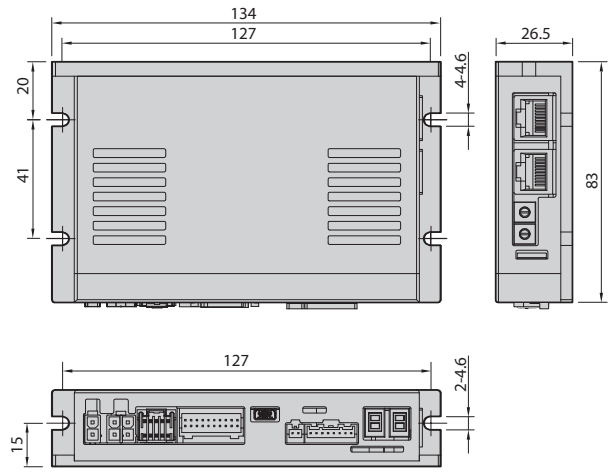

System Configuration

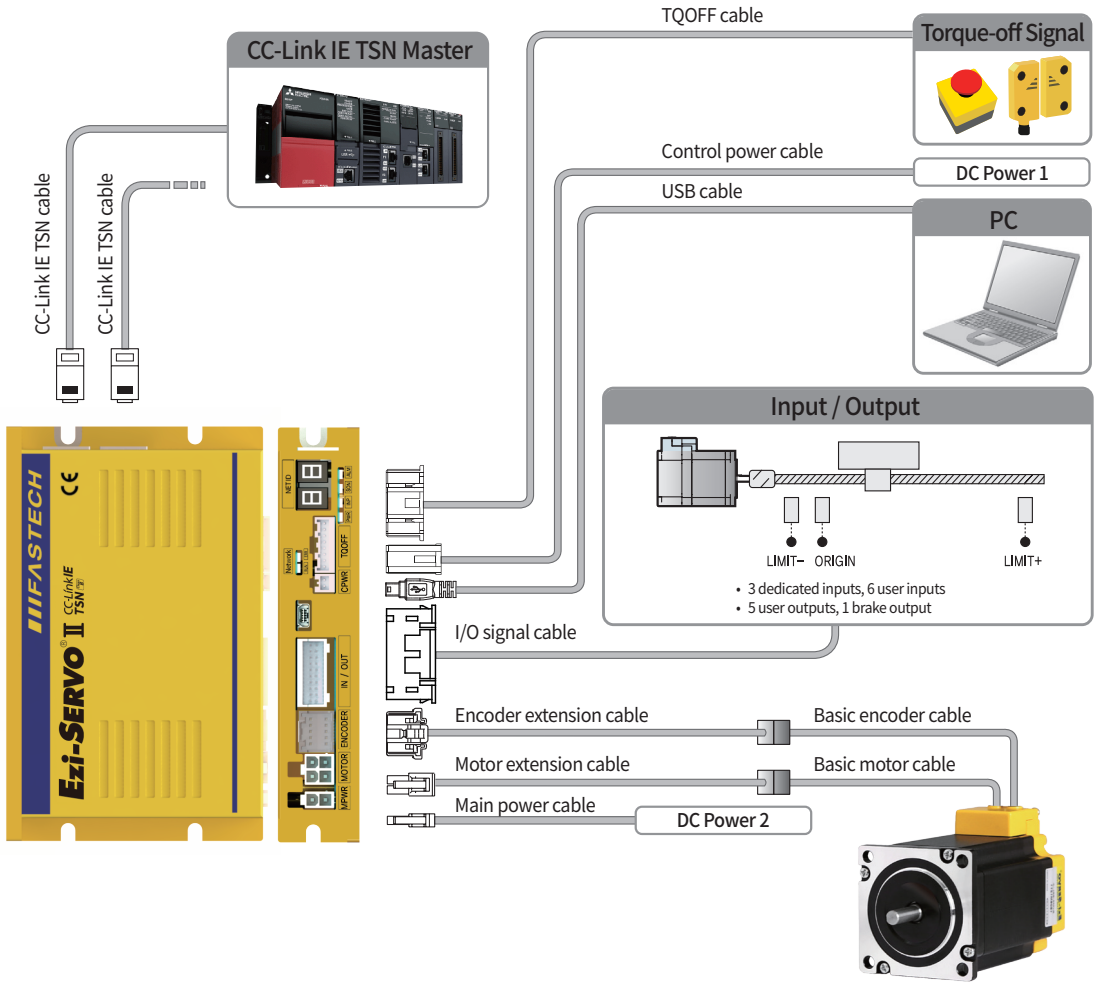

Ezi-SERVO® II CC-Link IE TSN ABS

Closed Loop Stepping System

- CC-Link IE TSN-compatible Closed Loop Stepping System
- CiA402 Drive Profile Support
- Long Life Cycle with Electronic Battery-less Multi-turn Absolute Encoder (Multi-turn : 16 bits, Single-turn : Max. 20,000 P/R)
- No External Sensors Required, Simple Wiring
- No Battery Replacement Required, Easy Maintenance
- Torque Off Function Supported

Specifications

Model		Ezi-SERVOII-CT-ABS
Main Power Supply		DC 24 V ± 10 %
Control Power Supply		DC 24 V ± 10 %
Speed Control Range		0 ~ 3,000 r/min
Encoder Resolution [P/R]		Multi-turn : 16 bits, Single-turn : Max. 20,000 P/R
Digital Input		3 dedicated inputs (LIMIT+, LIMIT-, ORIGIN) and 6 user inputs
Digital Output		5 user outputs and 1 Brake signal output
Torque-Off Function		2 inputs (TQOFF1, TQOFF2), 1 output (TQMON)
CC-Link IE TSN	Communication Protocol	CC-Link IE TSN Class B
	Operation Mode	CiA402 Drive Profile : Cyclic Synchronous Position Mode (CSP) Profile Position Mode (PP) Homing Mode (HM)
	Synchronization	Minimum Cycle Time: 250 µs / Synchronous Comm. (CSP, PP, HM) / Asynchronous Comm. (PP, HM)
Status Display	7-SEG	2 digits: IP Address or Error Code
	LED	Network status: Run, Error Drive status: Power, In-Position, Servo On, Alarm

Module Overview

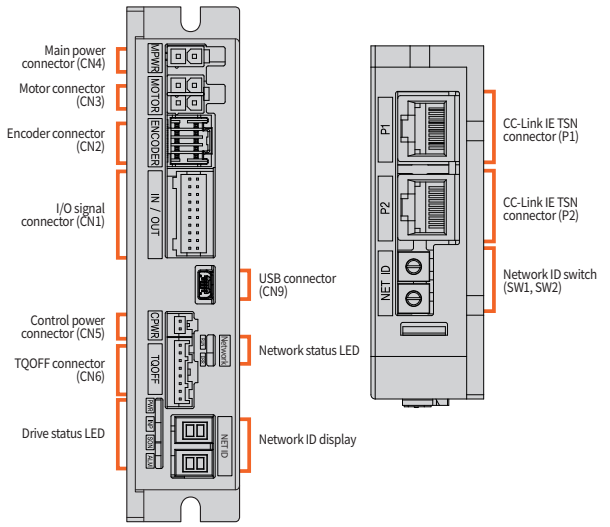

Dimension

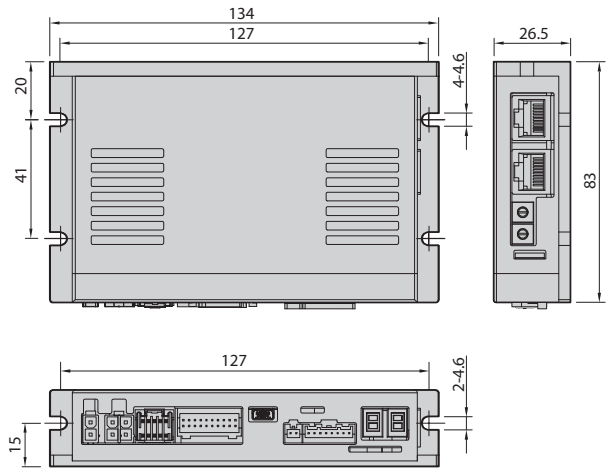

System Configuration

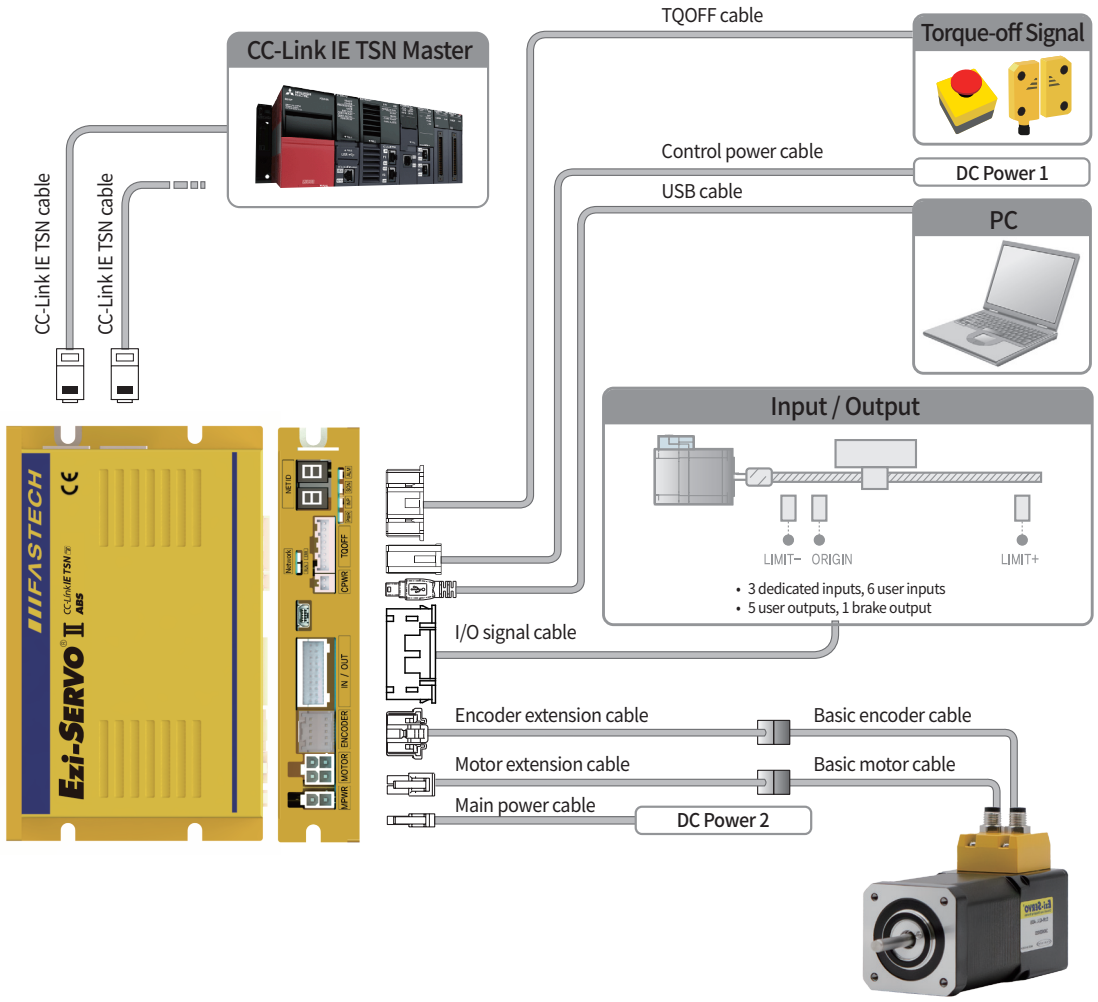

Ezi-SERVO® II CC-Link IE TSN ALL

Closed Loop Stepping System

- CC-Link IE TSN-compatible Closed Loop Stepping System
- CiA402 Drive Profile
- Motor + Drive Integrated
- Space Saving, Reduced Wiring
- Tuning Not Required, No Hunting
- High Resolution Encoder, Fast Response
- Low Heat Generation, High Torque

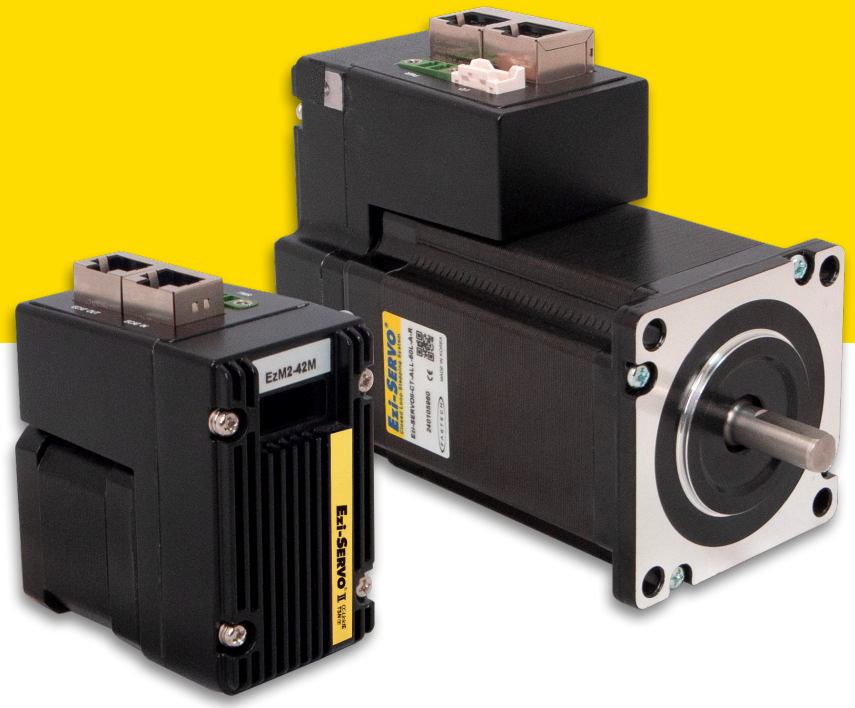

Specifications

Model		Ezi-SERVOII-CT-ALL
Main Power Supply		DC 24 V ± 10 %
Speed Control Range		0 ~ 3,000 r/min
Encoder Resolution [P/R]		10,000 / 20,000
Digital Input		3 dedicated inputs (LIMIT+, LIMIT-, ORIGIN) and 3 user inputs
Digital Output		2 user outputs and 1 Brake signal output
CC-Link IE TSN	Communication Protocol	CC-Link IE TSN Class B
	Operation Mode	CiA402 Drive Profile : Cyclic Synchronous Position Mode (CSP) Profile Position Mode (PP) Homing Mode (HM)
	Synchronization	Minimum Cycle Time: 250 µs / Synchronous Comm. (CSP, PP, HM) / Asynchronous Comm. (PP, HM)
Status Display	LED	Network status: Run, Error

Module Overview

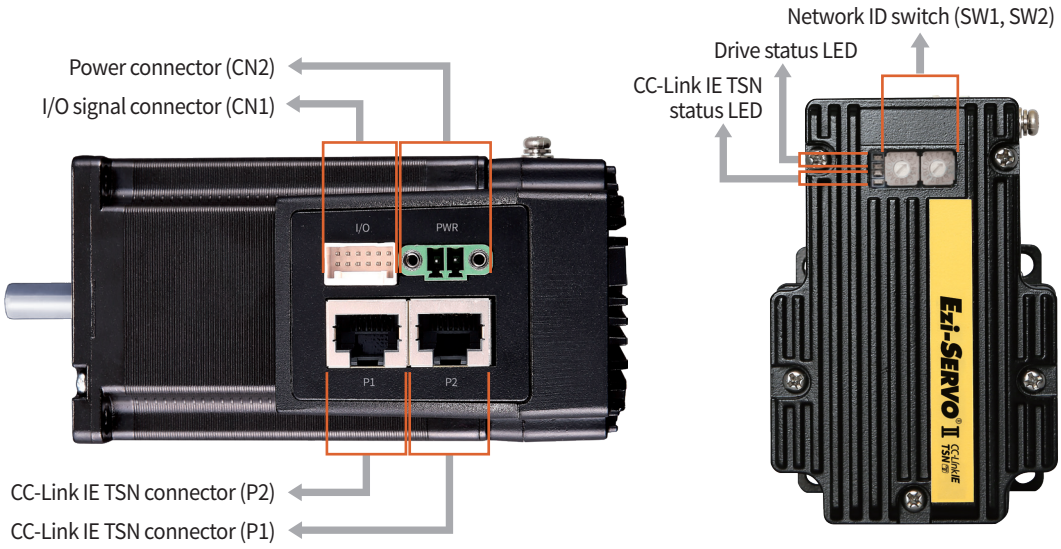

System Configuration

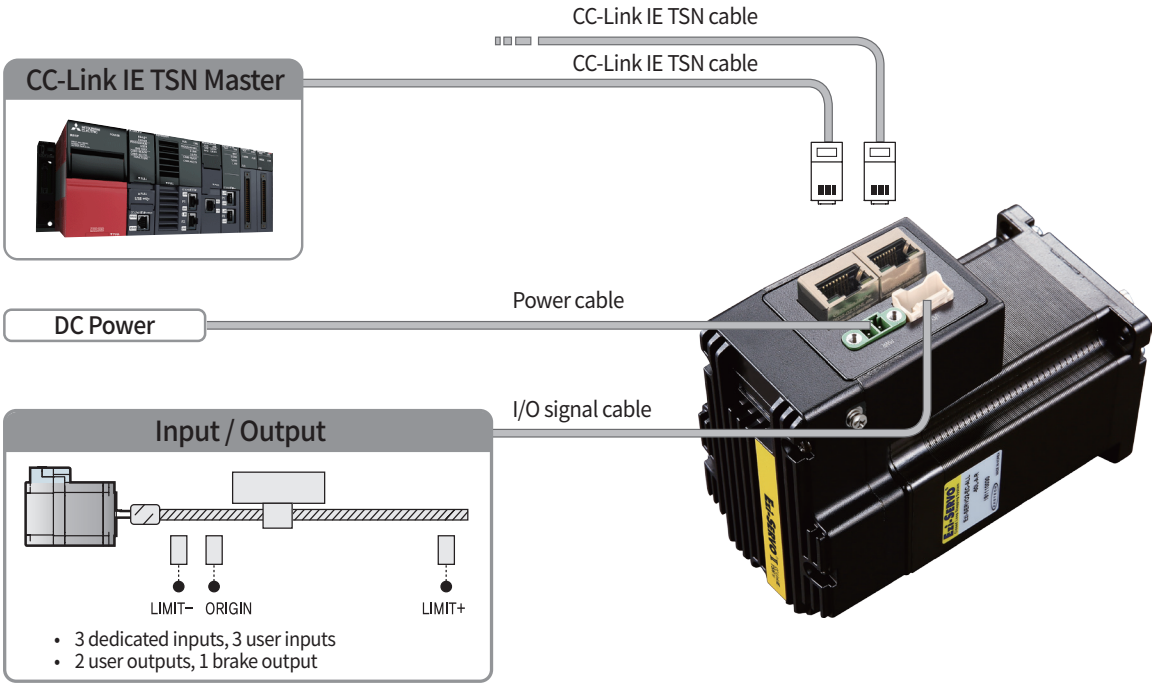

Ezi-SERVO® II CC-Link IE TSN 4X

Closed Loop Stepping System

- CC-Link IE TSN-compatible Closed Loop Stepping System
- CiA402 Drive Profile
- Compact Multi-Axis Drive (up to 4 axes)
- Space Saving, Reduced Wiring
- Tuning Not Required, No Hunting
- High Resolution Encoder, Fast Response
- Low Heat Generation, High Torque

Specifications

Model		Ezi-SERVOII-CT-4X Ezi-SERVOII-CT-3X
Main Power Supply		DC 24 V ± 10 %
Control Power Supply		DC 24 V ± 10 %
Speed Control Range		0 ~ 3,000 r/min
Encoder Resolution [P/R]		4,000 / 10,000 / 16,000 / 20,000
Digital Input		3 dedicated inputs (LIMIT+, LIMIT-, ORIGIN) for each axis
Digital Output		1 Brake signal for each axis
CC-Link IE TSN	Communication Protocol	CC-Link IE TSN Class B
	Operation Mode	CiA402 Drive Profile : Cyclic Synchronous Position Mode (CSP) Profile Position Mode (PP) Homing Mode (HM)
	Synchronization	Minimum Cycle Time: 250 µs / Synchronous Comm. (CSP, PP, HM) / Asynchronous Comm. (PP, HM)
Status Display	LED	Network status: Run, Error Drive status: Power, In-Position, Servo On, Alarm
Dimension [mm]		100.4(W) x 100 (D) x 84(H)

Module Overview

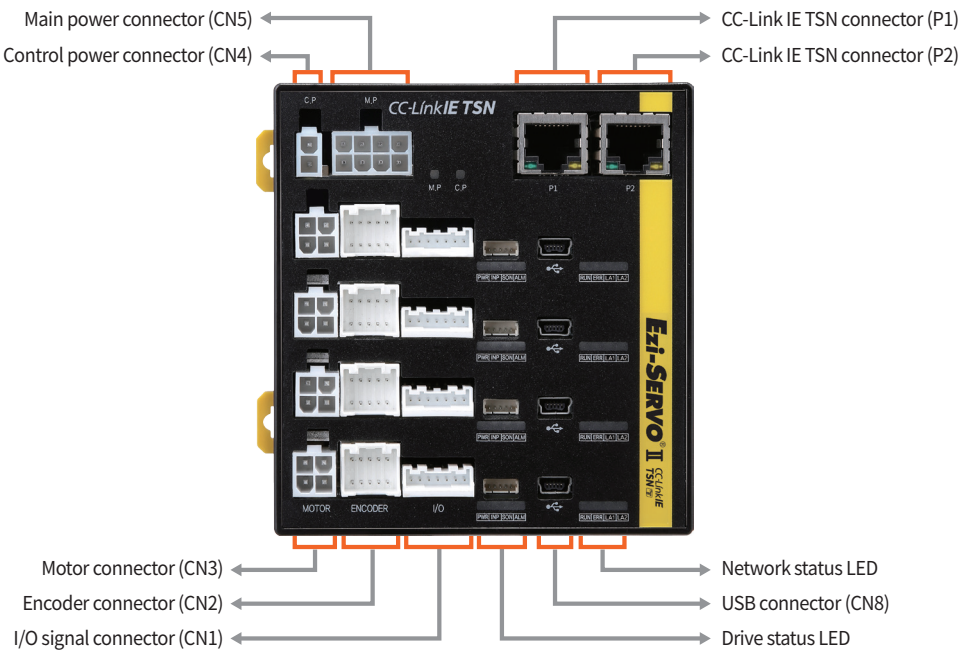

System Configuration

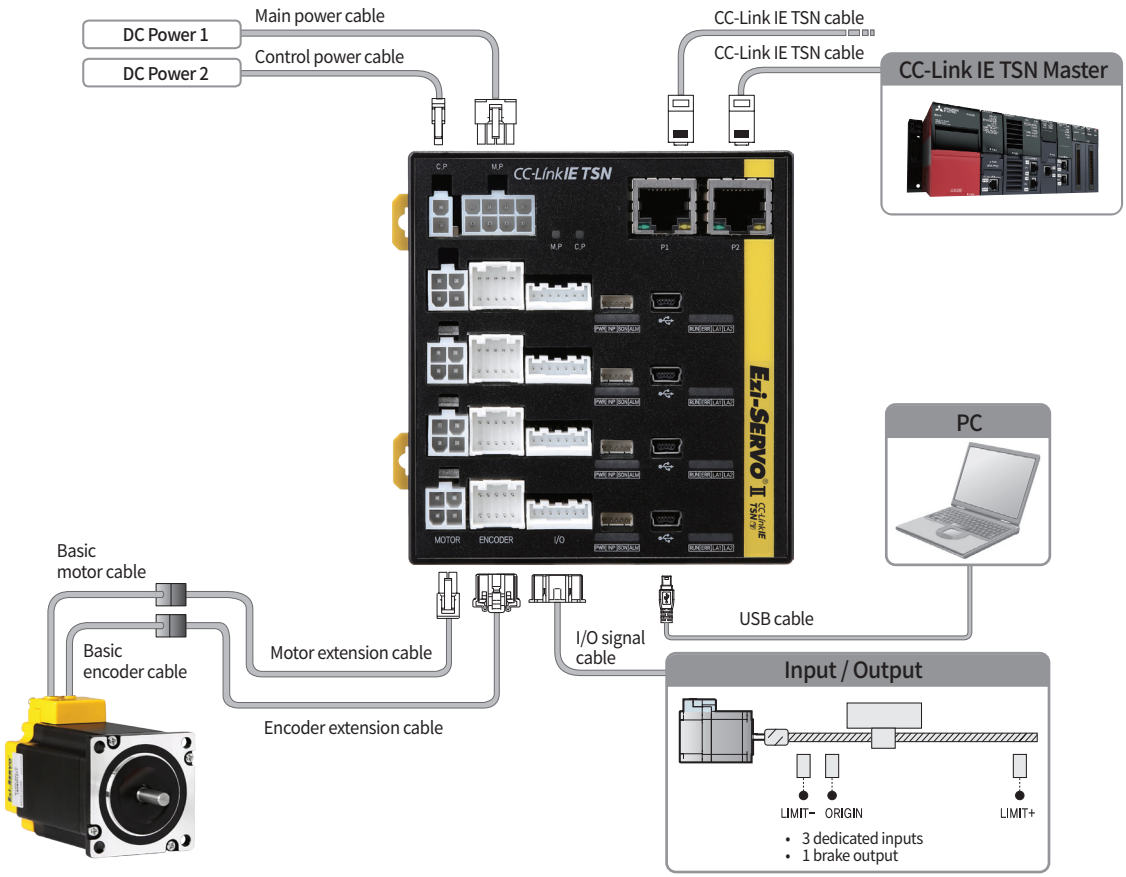

Ezi-SERVO® II CC-Link IE TSN 4X ABS

Closed Loop Stepping System

- CC-Link IE TSN-compatible Closed Loop Stepping System
- CiA402 Drive Profile Support
- Compact Multi-Axis Drive (Max. 4-Axis)
- Long Life Cycle with Electronic Battery-less Multi-turn Absolute Encoder (Multi-turn : 16 bits, Single-turn : Max. 20,000 P/R)
- No Battery Replacement Required, Easy Maintenance
- No External Sensors Required, Simple Wiring

Specifications

Model		Ezi-SERVOII-CT-4X-ABS Ezi-SERVOII-CT-3X-ABS
Main Power Supply		DC 24 V ± 10 %
Control Power Supply		DC 24 V ± 10 %
Speed Control Range		0 ~ 3,000 r/min
Encoder Resolution [P/R]		Multi-turn : 16 bits, Single-turn : Max. 20,000 P/R
Digital Input		3 dedicated inputs (LIMIT+, LIMIT-, ORIGIN) for each axis
Digital Output		1 Brake signal for each axis
CC-Link IE TSN	Communication Protocol	CC-Link IE TSN Class B
	Operation Mode	CiA402 Drive Profile : Cyclic Synchronous Position Mode (CSP) Profile Position Mode (PP) Homing Mode (HM)
	Synchronization	Minimum Cycle Time: 250 μs / Synchronous Comm. (CSP, PP, HM) / Asynchronous Comm. (PP, HM)
Status Display	LED	Network status: Run, Error Drive status: Power, In-Position, Servo On, Alarm
Dimension [mm]		100.4(W) x 100 (D) x 84(H)

Module Overview

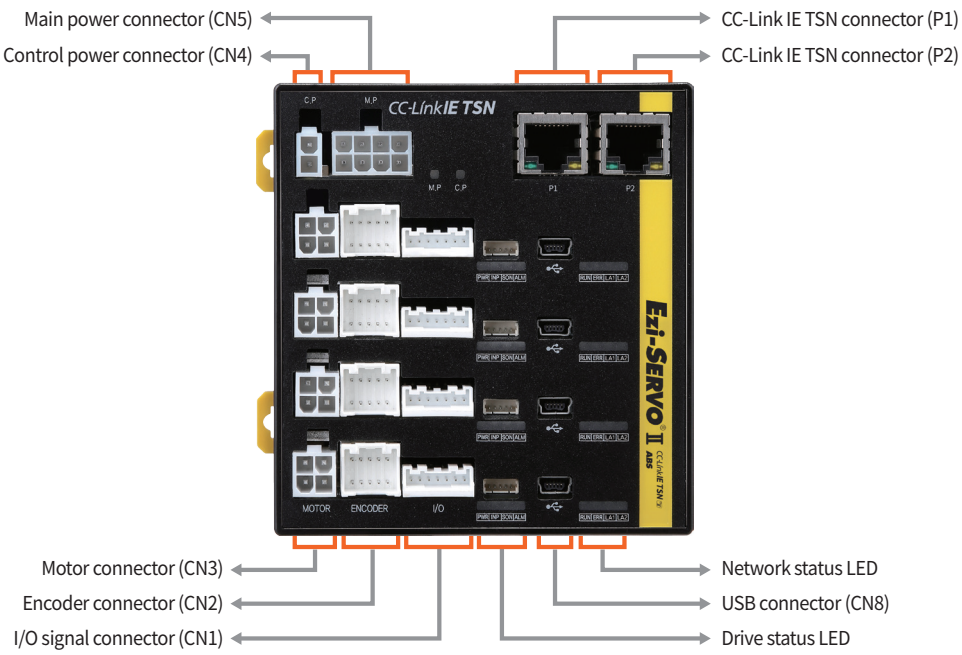

System Configuration

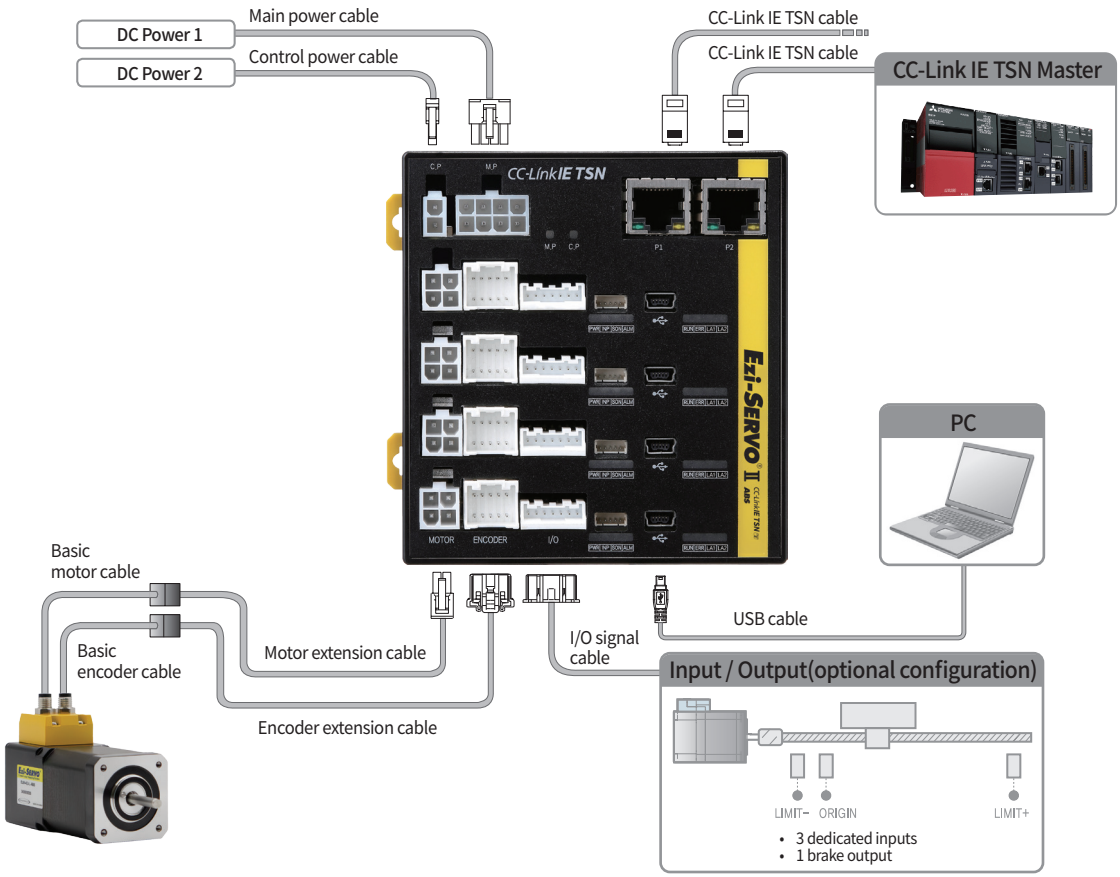

Ezi-STEP® II CC-Link IE TSN

Micro Stepping System

- CC-Link IE TSN-compatible Microstepping System
- CiA402 Drive Profile
- Torque-Off Function
- Software Damping (Resonance & Vibration Suppression)

Specifications

Model		Ezi-STEPII-CT
Main Power Supply		DC 24 V ± 10 %
Control Power Supply		DC 24 V ± 10 %
Motor Model		BM-20, 28, 42, 56, 60 Series
Speed Control Range		0 ~ 3,000 r/min
Reference Resolution [P/R]		500 / 1,000 / 1,600 / 2,000 / 3,200 / 3,600 / 4,000 / 5,000 / 6,400 / 8,000 / 10,000 / 20,000 / 25,000 / 36,000 / 40,000 / 50,000
Digital Input		3 dedicated inputs (LIMIT+, LIMIT-, ORIGIN) and 6 user inputs
Digital Output		5 user outputs and 1 Brake signal output
Torque-Off Function		2 inputs (TQOFF1, TQOFF2), 1 output (TQMON)
CC-Link IE TSN	Communication Protocol	CC-Link IE TSN Class B
	Operation Mode	CiA402 Drive Profile : Cyclic Synchronous Position Mode (CSP) Profile Position Mode (PP) Homing Mode (HM)
	Synchronization	Minimum Cycle Time: 250 µs / Synchronous Comm. (CSP, PP, HM) / Asynchronous Comm. (PP, HM)
Status Display	7-SEG	2 digits: IP Address or Error Code
	LED	Network status: Run, Error Drive status: Power, Run, Step On, Alarm

Module Overview

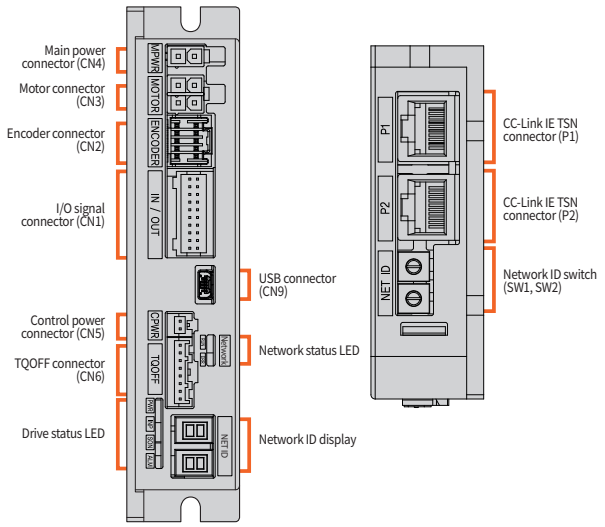

Dimension

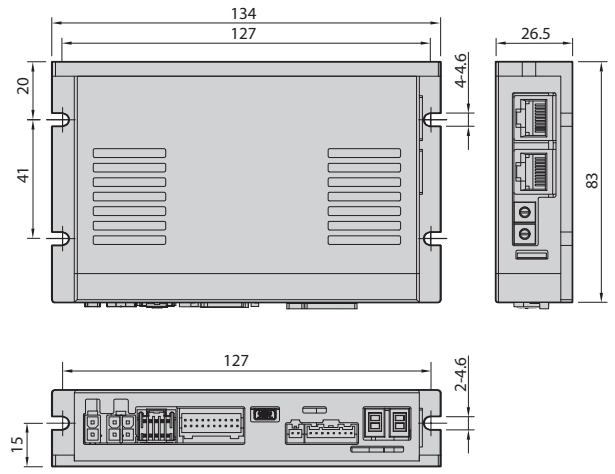

System Configuration

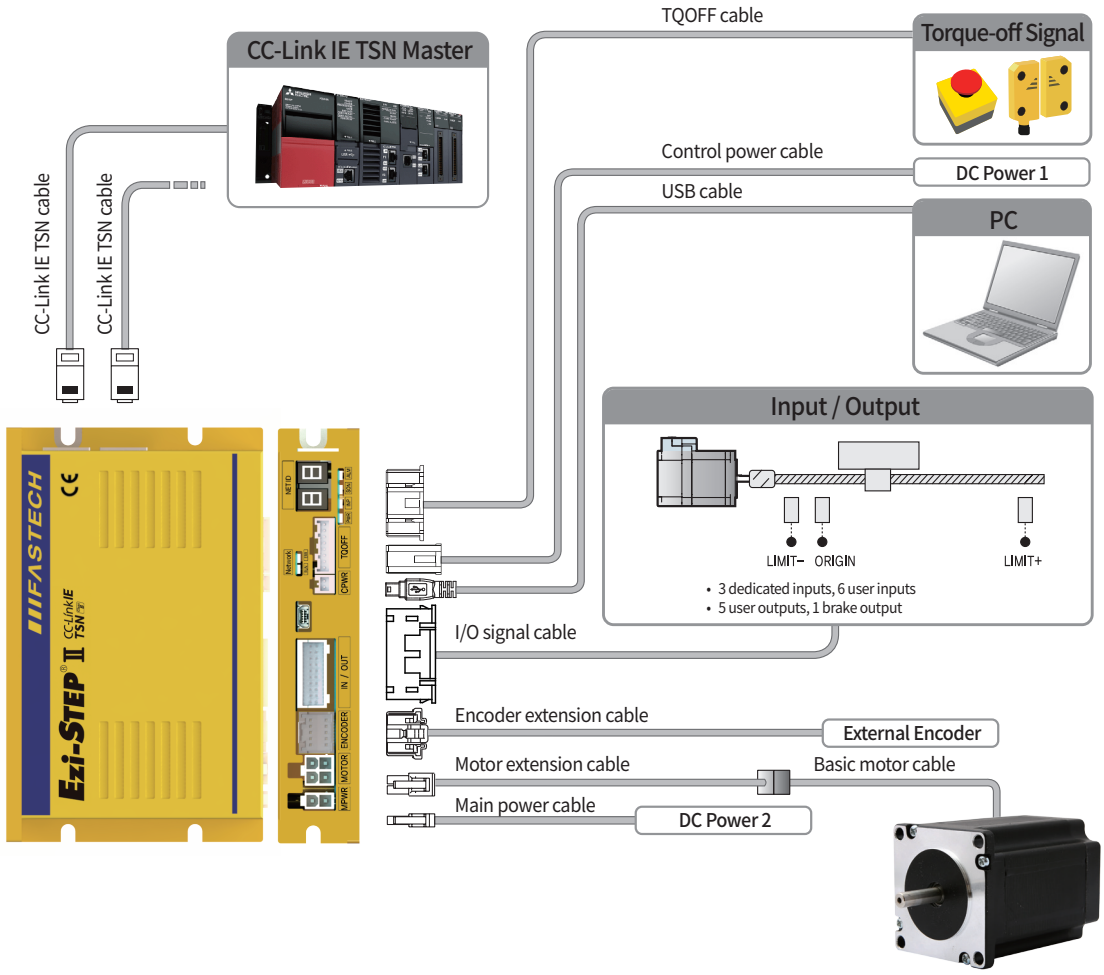

Ezi-STEP® II CC-Link IE TSN ALL

Micro Stepping System

- CC-Link IE TSN-compatible Microstepping System
- CiA402 Drive Profile Support
- Software Damping (Resonance & Vibration Suppression)
- Motor + Drive Integrated
- Space Saving, Reduced Wiring

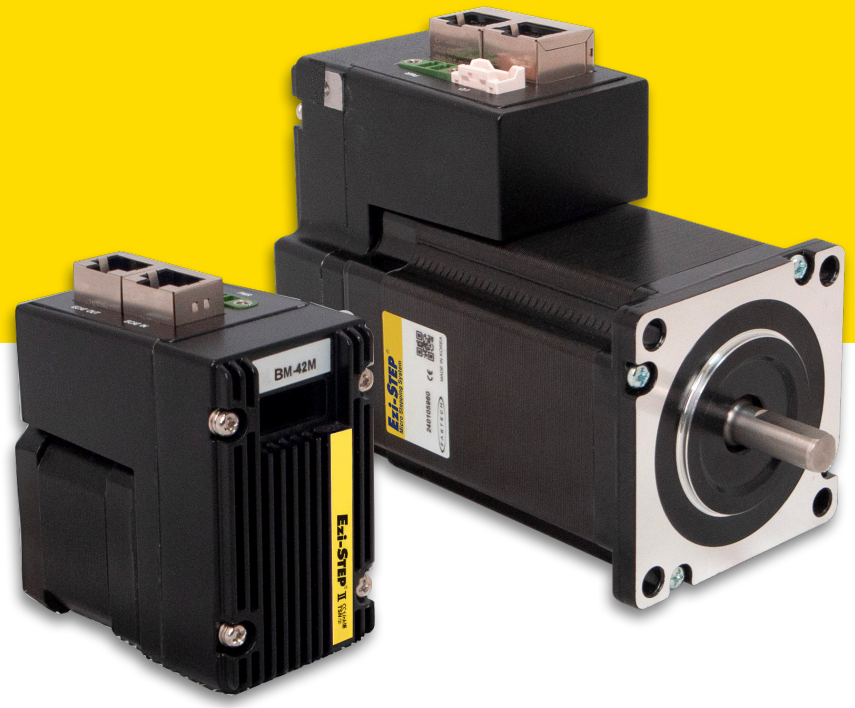

Specifications

Model		Ezi-STEPII-CT-ALL-42	Ezi-STEPII-CT-ALL-56	Ezi-STEPII-CT-ALL-60
Main Power Supply		DC 24 V ± 10 %		
Speed Control Range		0 ~ 3,000 r/min		
Reference Resolution [P/R]		500 / 1,000 / 1,600 / 2,000 / 3,200 / 3,600 / 4,000 / 5,000 / 6,400 / 8,000 / 10,000 / 20,000 / 25,000 / 36,000 / 40,000 / 50,000		
Digital Input		3 dedicated inputs (LIMIT+, LIMIT-, ORIGIN) and 3 user inputs		
Digital Output		2 user outputs and 1 Brake signal output		
CC-Link IE TSN	Communication Protocol	CC-Link IE TSN Class B		
	Operation Mode	CiA402 Drive Profile : Cyclic Synchronous Position Mode (CSP) Profile Position Mode (PP) Homing Mode (HM)		
	Synchronization	Minimum Cycle Time: 250 µs / Synchronous Comm. (CSP, PP, HM) / Asynchronous Comm. (PP, HM)		
Status Display	LED	Network status: Run, Error		

Module Overview

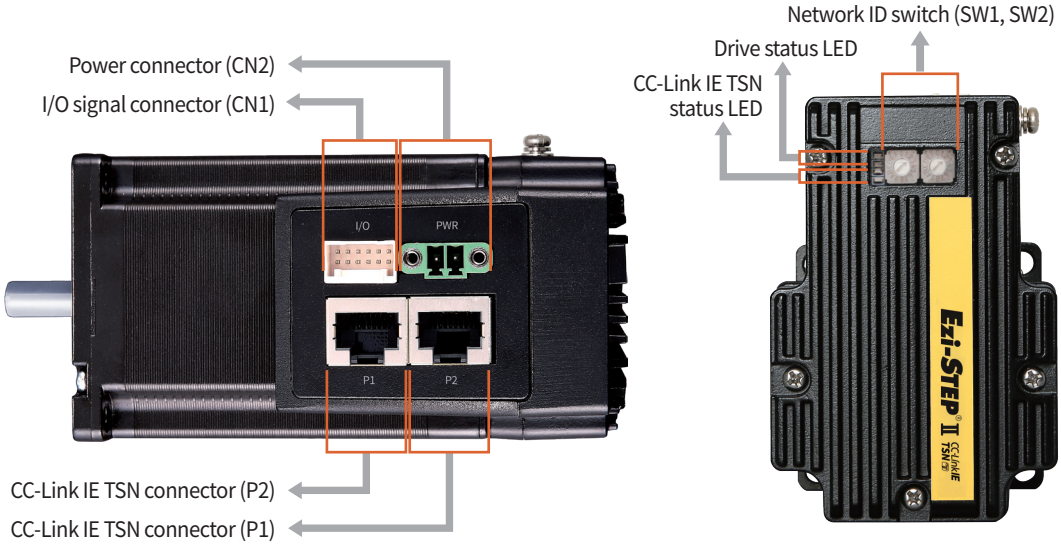

System Configuration

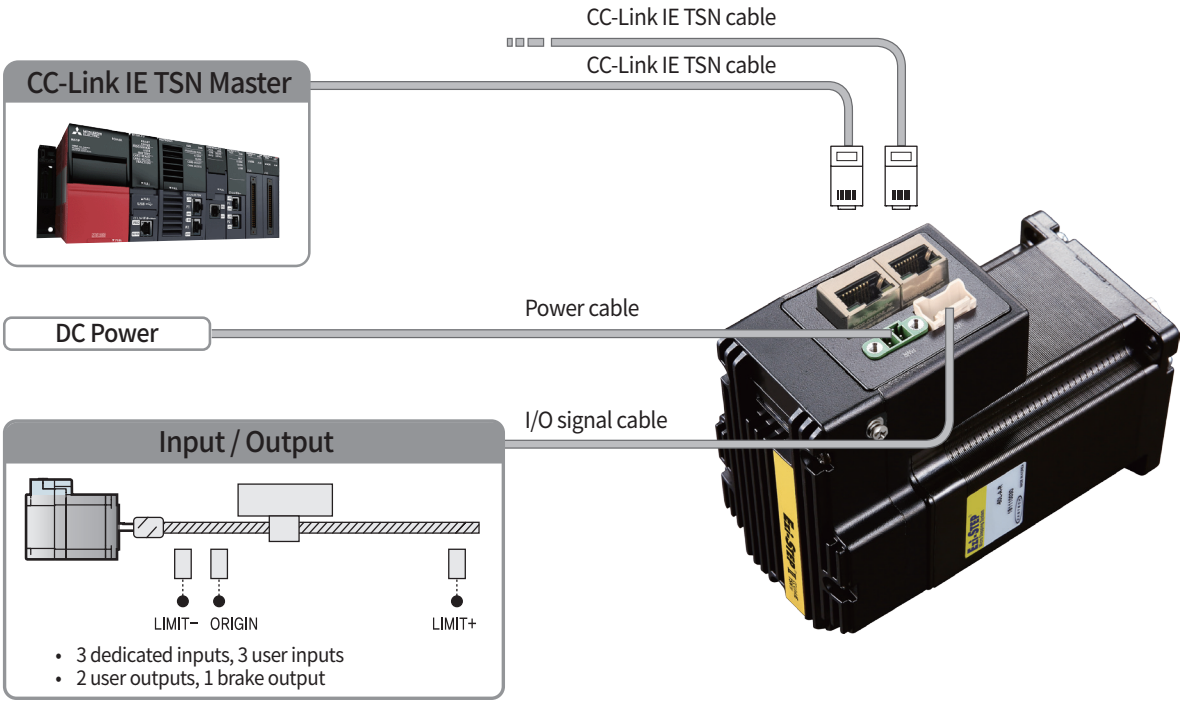

Ezi-STEP® II CC-Link IE TSN 4X

Micro Stepping System

- CC-Link IE TSN-compatible Microstepping System
- CiA402 Drive Profile Support
- Software Damping (Resonance & Vibration Suppression)
- Compact Multi-Axis Drive (Max. 4-Axis)
- Space Saving, Reduced Wiring

Specifications

Model		Ezi-STEPII-CT-4X Ezi-STEPII-CT-3X
Main Power Supply		DC 24 V ± 10 %
Control Power Supply		DC 24 V ± 10 %
Motor Model		BM-20, 28, 42, 56, 60 Series
Speed Control Range		0 ~ 3,000 r/min
Reference Resolution [P/R]		500 / 1,000 / 1,600 / 2,000 / 3,200 / 3,600 / 4,000 / 5,000 / 6,400 / 8,000 / 10,000 / 20,000 / 25,000 / 36,000 / 40,000 / 50,000
Digital Input		3 dedicated inputs (LIMIT+, LIMIT-, ORIGIN) for each axis
Digital Output		1 Brake signal for each axis
CC-Link IE TSN	Communication Protocol	CC-Link IE TSN Class B
	Operation Mode	CiA402 Drive Profile : Cyclic Synchronous Position Mode (CSP) Profile Position Mode (PP) Homing Mode (HM)
	Synchronization	Minimum Cycle Time: 250 µs / Synchronous Comm. (CSP, PP, HM) / Asynchronous Comm. (PP, HM)
Status Display	LED	Network status: Run, Error Drive status: Power, In-Position, Servo On, Alarm
Dimension [mm]		100.4(W) x 100 (D) x 84(H)

Module Overview

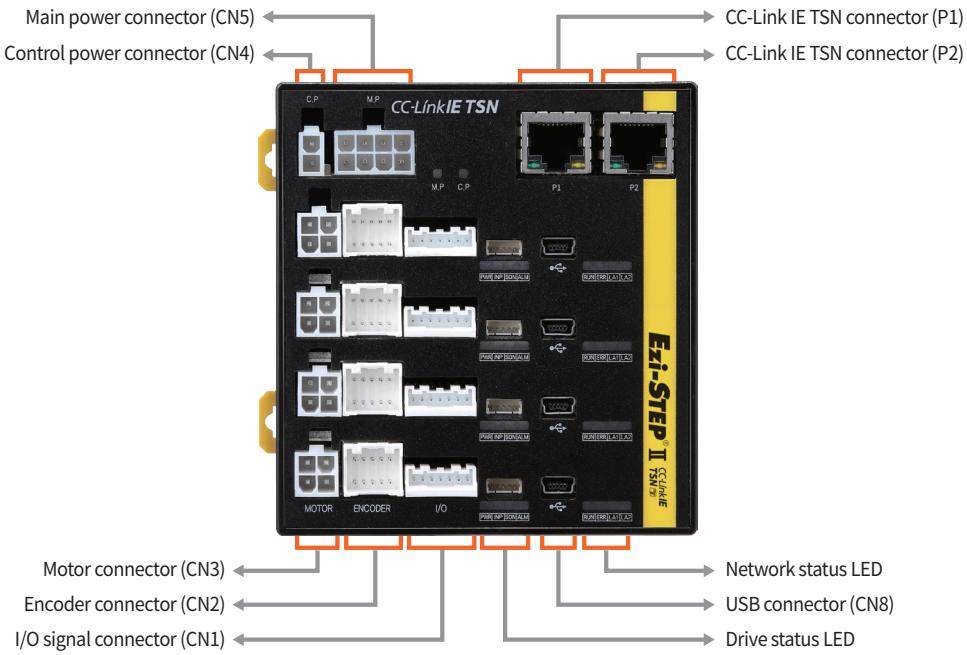

System Configuration

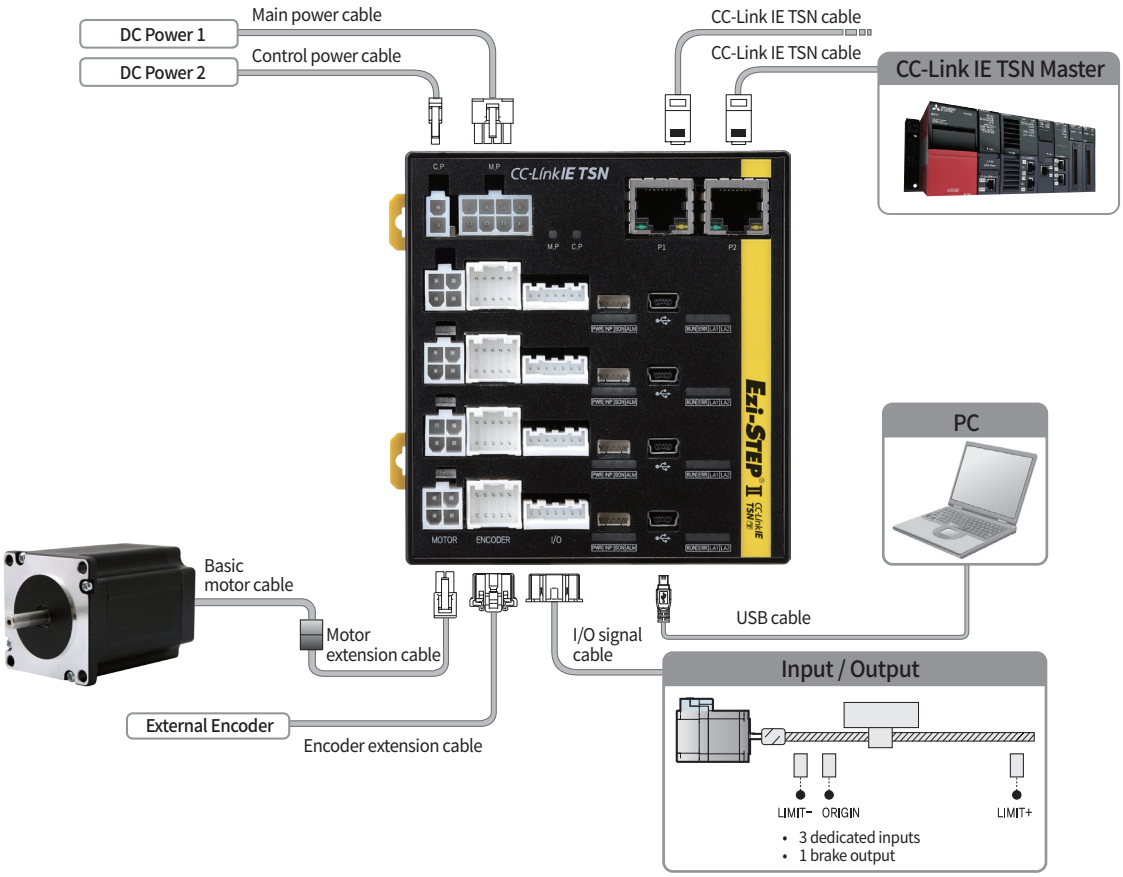

Ezi-SPEED® CC-Link IE TSN DC

BLDC Motor Speed Control System

- CC-Link IE TSN-compatible Low Voltage BLDC Motor Speed Control System
- DC Power Input (DC 12 ~ 48 V)
- Auto-tuning
- Wide Speed Range (50 ~ 4,000 r/min)
- Stable Speed Regulation (±0.2 %)

Specifications

Model		Ezi-SPEED-CT-A2H
Power Supply		DC 12 ~ 48 V ± 10 %
Input Current (continuous / max)		~7 A / 10 A (< 60 s)
Output Power (continuous / max)		~200 W / 350 W (< 60 s)
PWM Frequency		25 kHz or 50 kHz
Current Control Sampling Rate		25 kHz (40 us)
Speed Control Sampling Rate		2.5 kHz (400 us)
Speed Control Range		50 ~ 4,000 r/min
Position Sensor		Hall Sensor: H1, H2, H3
Digital Input		5 programmable inputs
Digital Output		3 programmable outputs
Torque-OFF Function		2 inputs (TQOFF1, TQOFF2)
Additional I/O	Brake	Dedicated connector for external brake
	Regeneration Resistor	Dedicated connector for external regenerative resistor
CC-Link IE TSN	Communication Protocol	CC-Link IE TSN Class B
	Operation Mode	Manufacturer-specific Mode: IO-Map Command Mode
	Synchronization	Minimum Cycle Time: 250 μs / Synchronous Comm. / Asynchronous Comm.

Module Overview

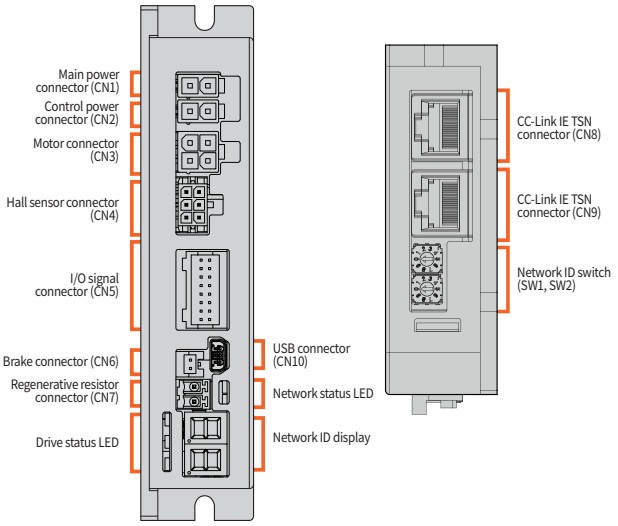

Dimension

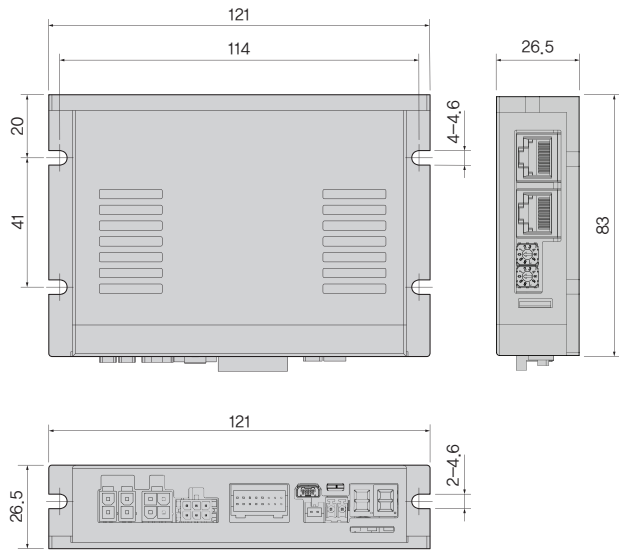

System Configuration

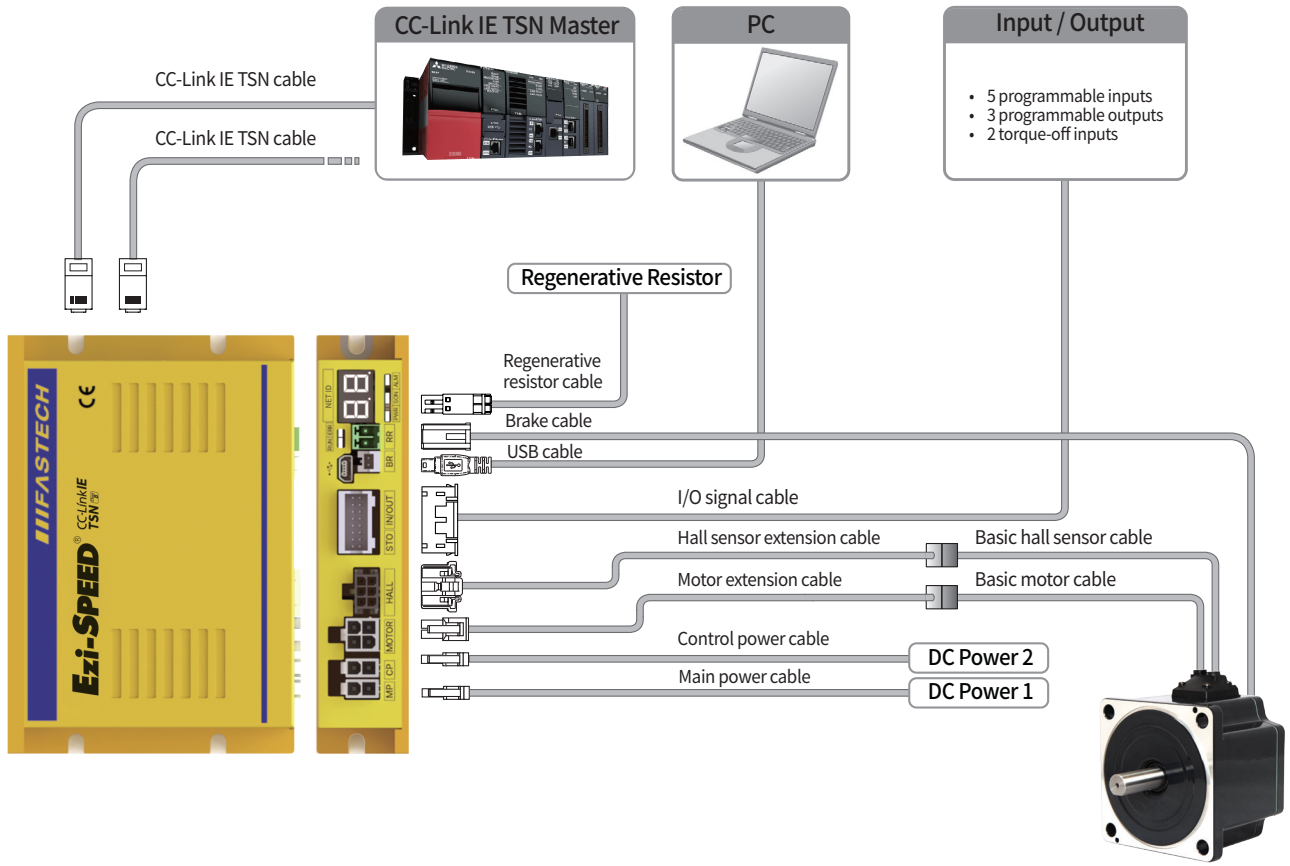

Ezi-SPEED® CC-Link IE TSN

BLDC Motor Speed Control System

- CC-Link IE TSN-compatible BLDC Motor Speed Control System
- AC Power Supply Input (AC 200 ~ 240 V)
- Compact, Light Weight. High Power, High Efficiency Brushless Motor
- Wide Speed Range (50 ~ 4,000 r/min)
- Stable Speed Regulation (±0.2 %)
- BLDC Motor Line-up (30, 60, 120, 200, 400 W)

Specifications

□: Motor flange size
■: Shaft figuration

Model		Ezi-SPEED-CT-□-■-30	Ezi-SPEED-CT-□-■-60	Ezi-SPEED-CT-□-■-120	Ezi-SPEED-CT-□-■-200	Ezi-SPEED-CT-□-■-400
Rated Output Power (Continuous)		30 W	60 W	120 W	200 W	400 W
Power Supply	Rated Voltage	Single-phase 200 ~ 240 V / Three-phase 200 ~ 240 V				
	Rated Frequency	50/60 Hz ± 5 %				
	Rated Input Current	Single-Phase : 0.88 A Three-Phase : 0.51 A	Single-Phase : 1.55 A Three-Phase : 0.90 A	Single-Phase : 2.43 A Three-Phase : 1.41 A	Single-Phase : 3.42 A Three-Phase : 1.97 A	Single-Phase : 5.64 A Three-Phase : 3.26 A
	Maximum Input Current	Single-Phase : 1.9 A Three-Phase : 1.1 A	Single-Phase : 2.8 A Three-Phase : 1.7 A	Single-Phase : 4.5 A Three-Phase : 2.6 A	Single-Phase : 5.47 A Three-Phase : 3.16 A	Single-Phase : 7.85 A Three-Phase : 4.53 A
Rated Phase Current		0.21 A	0.36 A	0.85 A	1.65 A	2.37 A
Rated Torque		0.096 N·m	0.191 N·m	0.382 N·m	0.637 N·m	1.27 N·m
Maximum Instantaneous Torque		0.144 N·m	0.287 N·m	0.573 N·m	1.15 N·m	1.91 N·m
Rated Speed		3,000 r/min				
Speed Control Range		50 ~ 4,000 r/min				
Speed Regulation		±0.2 % or less / Conditions : 0~Rated Torque, Rated Speed, Rated Voltage, Normal Temperature				
Digital Input		7 programmable inputs				
Digital Output		2 programmable outputs				
CC-Link IE TSN	Communication Protocol	CC-Link IE TSN Class B				
	Operation Mode	Manufacturer-specific Mode: IO-Map Command Mode				
	Synchronization	Minimum Cycle Time: 250 μs / Synchronous Comm. / Asynchronous Comm.				

System Configuration

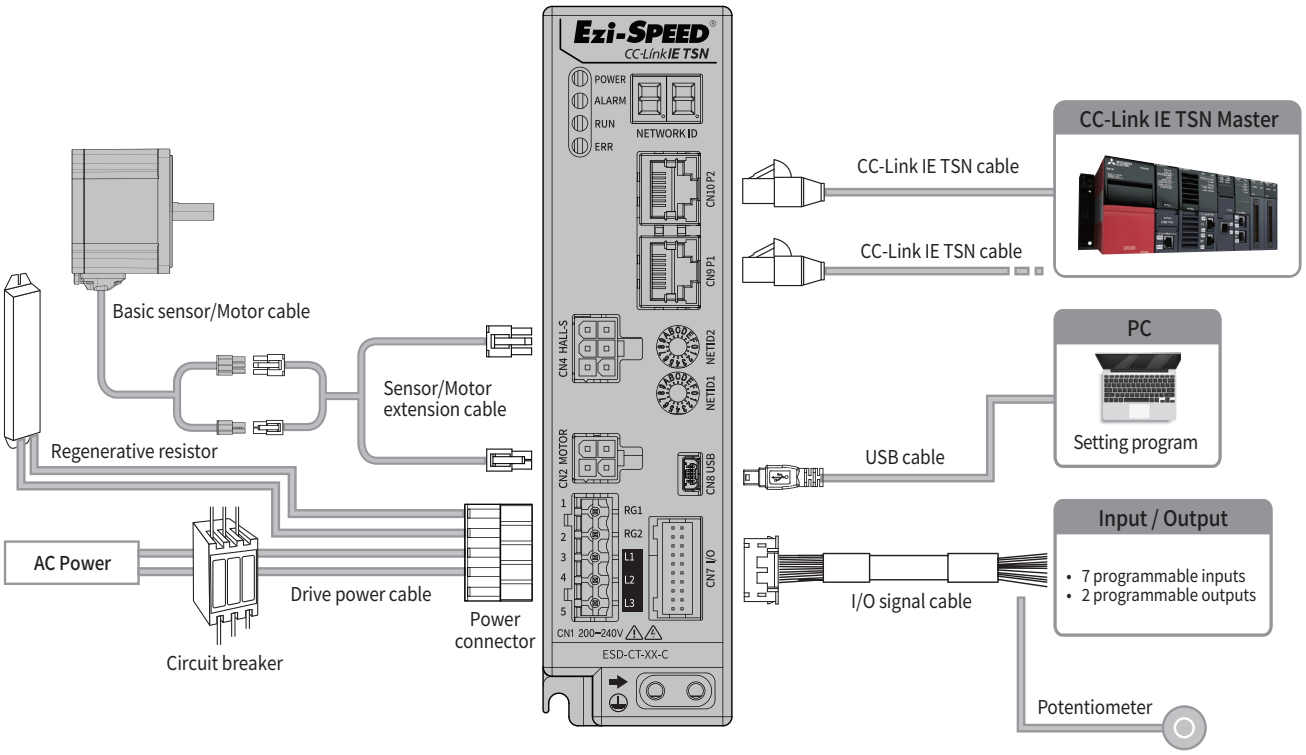

Dimension

Unit [mm]

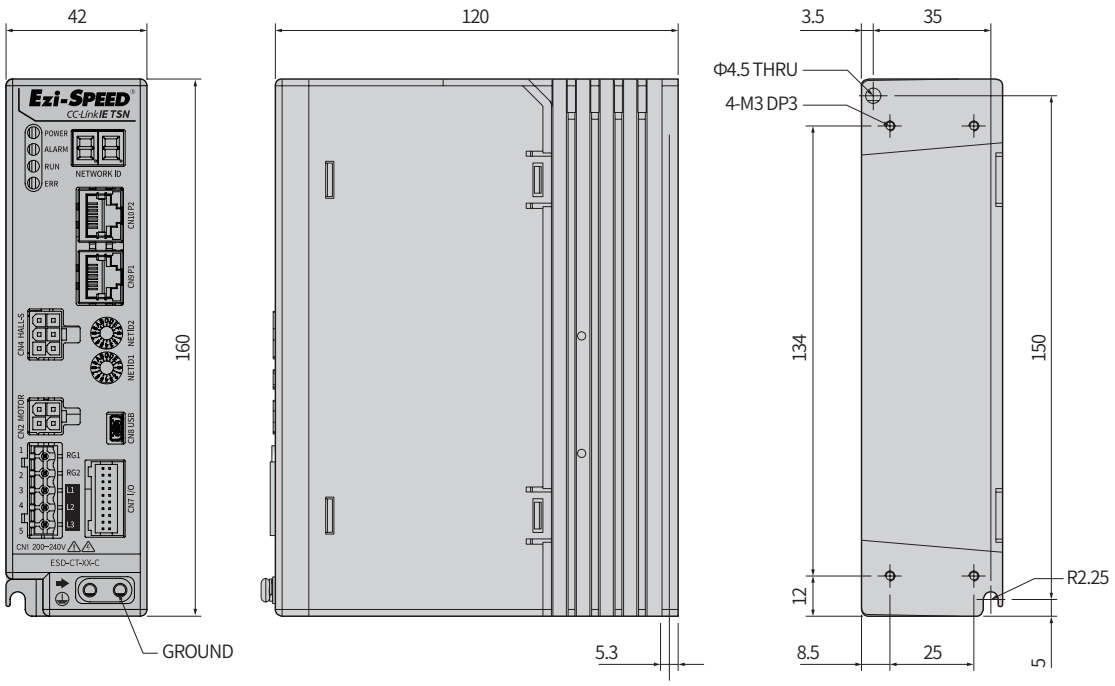

Ezi-POS® CC-Link IE TSN

Servo Control System

- CC-Link IE TSN-compatible Low-Voltage Servo Control System
- CiA402 Drive Profile
- DC Power Supply Input (DC 12 ~ 48 V)
- Auto-tuning
- Torque-Off Function
- Various Motor Options (BLDC Motor, Servo Motor, Linear Motor, VCM, etc)
- Various Position Sensor Options (Incremental/Absolute Encoders)

Specifications

Model		Ezi-POS-CT-A2A	Ezi-POS-CT-A2E
Power Supply		DC 12 ~ 48 V ± 10 %	
Input Current (continuous / max)		~7 A / 10 A (< 60 s)	
Output Power (continuous / max)		~200 W / 350 W (< 60 s)	
PWM Frequency		25 kHz or 50 kHz	
Current Control Sampling Rate		25 kHz (40 us)	
Position/Speed Control Sampling Rate		2.5 kHz (400 us)	
Speed Control Range		0 ~ 12,000 r/min	
Position Sensor		Absolute Encoder: BiSS-C, RS-485	Incremental Encoder: A, /A, B, /B, Z, /Z
Digital Input		3 dedicated inputs (LIMIT+, LIMIT-, ORIGIN), 2 user inputs	
Digital Output		3 user outputs	
Torque-Off Function		2 inputs (TQOFF1, TQOFF2)	
Additional I/O	Brake	Dedicated connector for external brake	
	Regeneration Resistor	Dedicated connector for external regenerative resistor	
CC-Link IE TSN	Communication Protocol	CC-Link IE TSN Class B	
	Operation Mode	CiA402 Drive Profile : Cyclic Synchronous Position Mode (CSP) Profile Position Mode (PP) Homing Mode (HM)	
	Synchronization	Minimum Cycle Time: 250 µs / Synchronous Comm. (CSP, PP, HM) / Asynchronous Comm. (PP, HM)	

Module Overview

Ezi-POS-CT-A2E

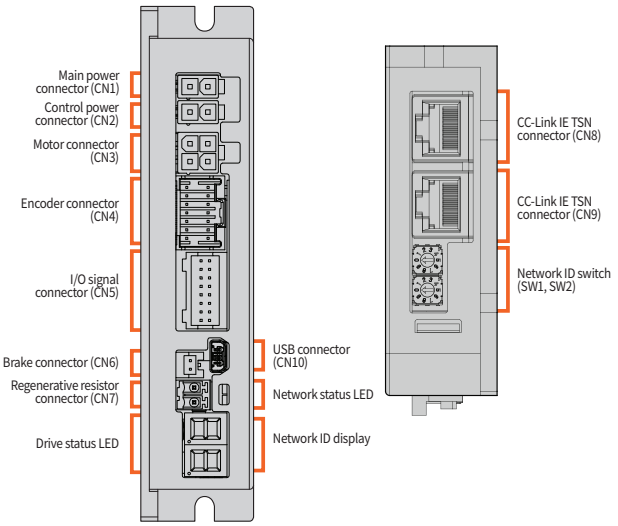

Dimension

Ezi-POS-CT-A2E

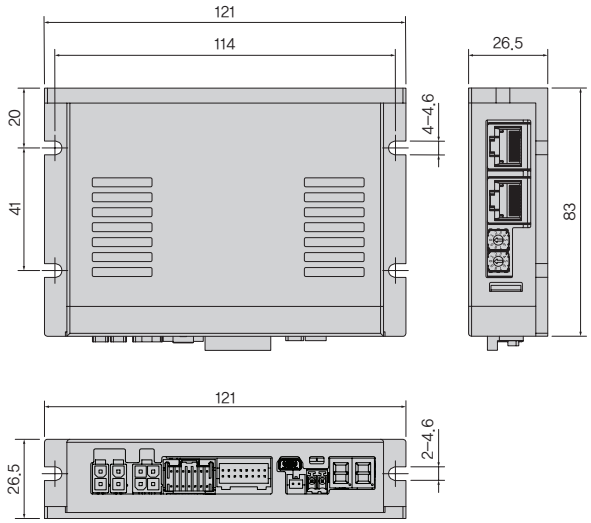

System Configuration

Ezi-POS-CT-A2E

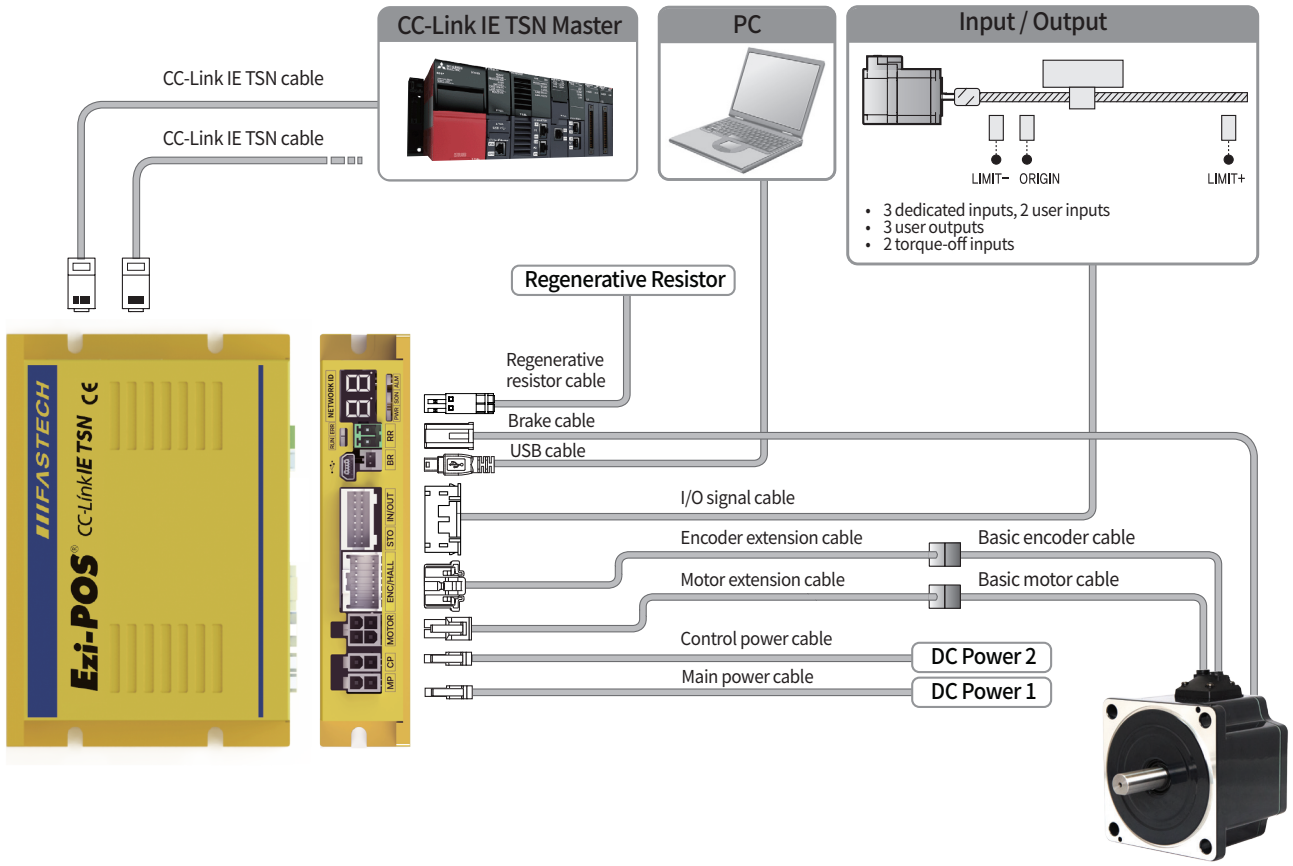

Ezi-IO® CC-Link IE TSN DIO

Network Input/Output

- CC-Link IE TSN-compatible Digital I/O Module
- CC-Link IO Map
- Input Filter Function
- Simple and Easy Wiring
- DIN Rail Mounting

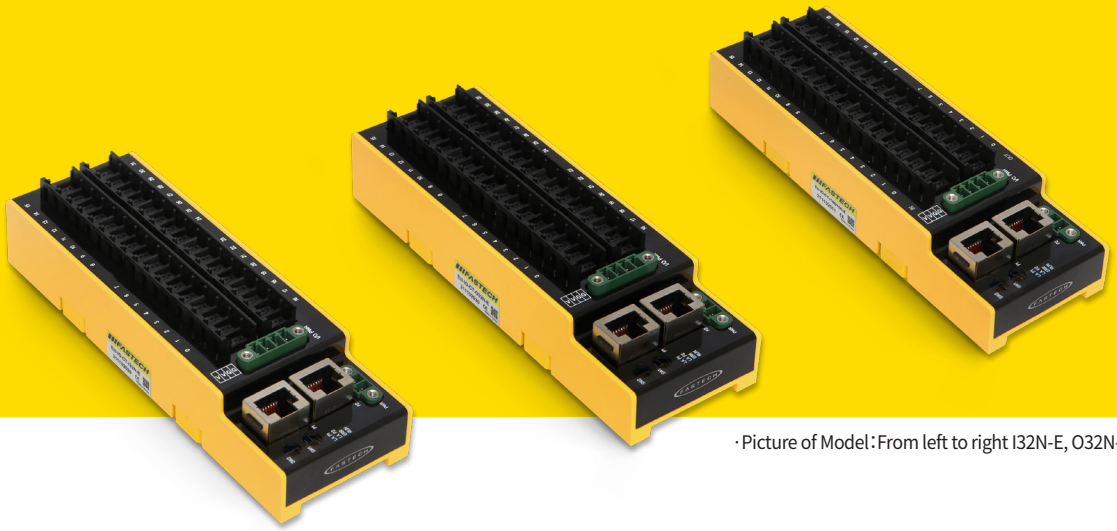

· Picture of Model : From left to right I32N-E, O32N-E, I16O16N-E

Specifications

Model			Ezi-IO-CT-I32N-E	Ezi-IO-CT-O32N-E	Ezi-IO-CT-I16O16N-E
Control Power Supply			DC 24 V ± 10 %		
Function	Input	Number of Input Channels	32 CH	-	16 CH
		Rated Input Voltage	DC 24 V		DC 24 V
		Rated Input Current	5 mA/CH		5 mA/CH
		Isolation Method	Photocoupler Isolation		Photocoupler Isolation
		Common Method	16 CH/COM		16 CH/COM
		Input Filter	Max. 40 ms(Filter Resolution: 200 µs)		Max. 40 ms(Filter Resolution: 200 µs)
		Off→On Response Time	10 µs or lower		10 µs or lower
		On→Off Response Time	70 µs or lower		70 µs or lower
	Output	Number of Output Channels	-	32 CH	16 CH
		Rated Output Voltage		DC 24 V	DC 24 V
		Rated Output Current		0.5 A/CH (3 A/COM)	0.5 A/CH (3 A/COM)
		Isolation Method		Photocoupler Isolation	Photocoupler Isolation
		Common Method		16 CH / COM	16 CH/COM
		Off→On Response Time		4 µs or lower	4 µs or lower
		On→Off Response Time		190 µs or lower	190 µs or lower
LED Display			• PWR : Power Status • RUN : Module Status	• ERR : Operation Error • LA P1, LA P2 : CC-Link IE TSN Status	
			Input 0~31 Status	Output 0~31 Status	Input 0~15 / Output 0~15 Status
CC-Link IE TSN		Communication Protocol	CC-Link IE TSN Class B		
		Operation Mode	CC-Link IO Map		
		Synchronization	Asynchronous Comm. (Minimum Cycle Time: 250 µs)		

Module Overview

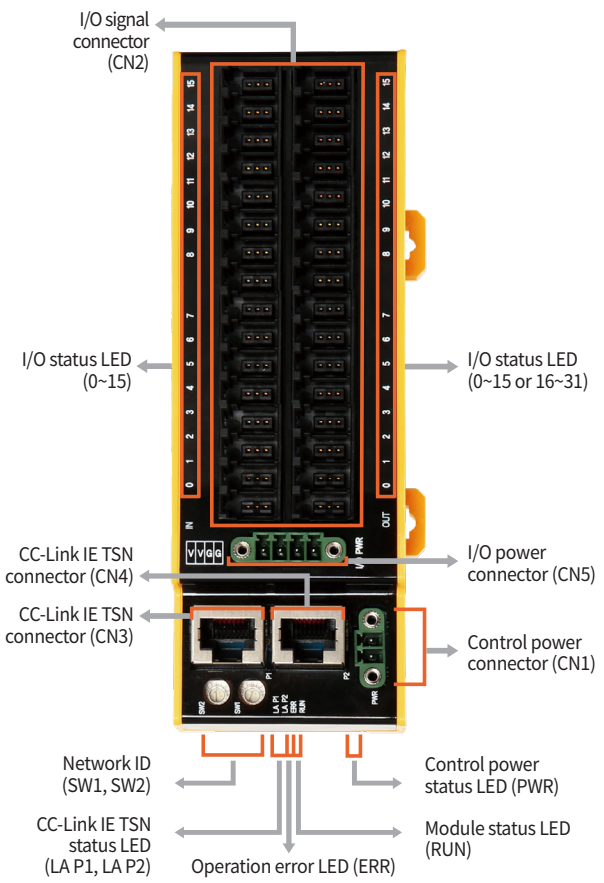

System Configuration

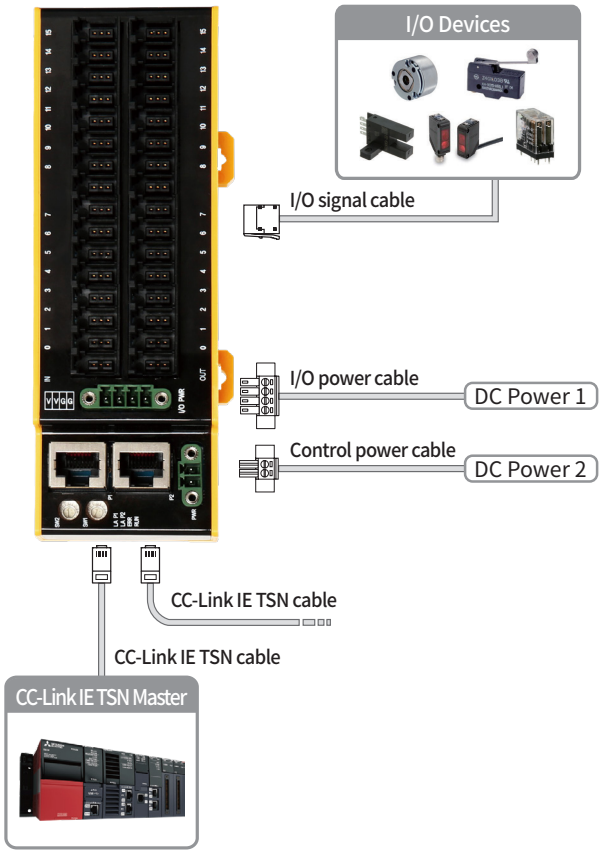

Wiring Example(Ezi-IO-CT-I16O16N-E)

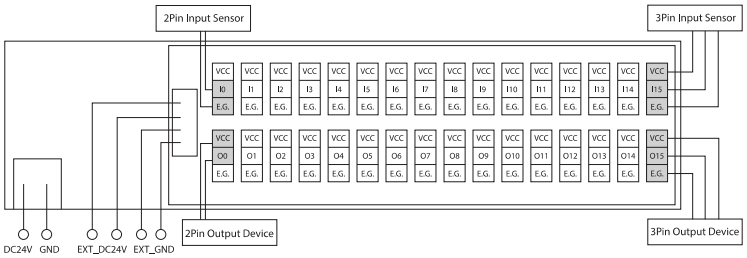

Dimension

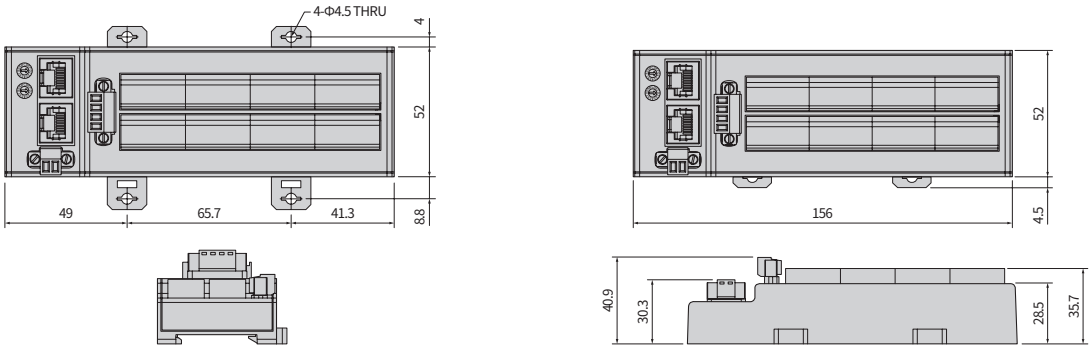

Ezi-Robo® CC-Link IE TSN IGH

Precise Actuator System

- Slider Type Electric Actuator with Stepping Motor & Ball Screw
- High Strength Steel Frame
- Repeatability (±0.005 mm)
- High Resolution Encoder (Max. 20,000 P/R)
- Size Line-up (IGH15: 30 x 15 mm, IGH23: 50.5 x 23 mm, IGH30: 60.5 x 30 mm)
- Compatible with Field Networks (EtherCAT, CC-Link IE TSN, Ethernet, PROFINET, Pulse Input, RS-485)

IGH-15/23

Model		Ezi-Robo-IGH-15-□ Ezi-Robo-IGH-15S-□		Ezi-Robo-IGH-23-□ Ezi-Robo-IGH-23S-□		Ezi-Robo-IGH-23C-□	
Actuator Type	[mm]	Open / Cover		Open / Cover		Cleanroom	
Lead	[mm]	1	2	2	5	2	5
Guide Rail Length	[mm]	100 ~ 200		150 ~ 300		150 ~ 300	
Stroke	[mm]	60 ~ 160		76 ~ 226		76 ~ 226	
Repeatability	[mm]	±0.005		±0.005		±0.005	
Maximum Speed	[mm/s]	50	100	100	250	100	250
Permissible Moment	[N·m]	M_P : 10 M_Y : 11 M_R : 28		M_P : 46 M_Y : 51 M_R : 134		M_P : 29 M_Y : 51 M_R : 61	
Cleanroom Classification		-		Class3, ISO Standard		Class3, ISO Standard	

IGH-30

Model		Ezi-Robo-IGH-30-□ Ezi-Robo-IGH-30S-□		Ezi-Robo-IGH-303C-□	
Actuator Type	[mm]	Open / Cover		Cleanroom	
Lead	[mm]	5	10	5	10
Guide Rail Length	[mm]	150 ~ 500		150 ~ 500	
Stroke	[mm]	60 ~ 410		50 ~ 400	
Repeatability	[mm]	±0.005		±0.005	
Maximum Speed	[mm/s]	250	500	250	500
Permissible Moment	[N·m]	M_P : 101 M_Y : 120 M_R : 260		M_P : 43 M_Y : 107 M_R : 84	
Cleanroom Classification		-		Class3, ISO Standard	

Dimension (IGH-23)

Unit [mm]

Guide Rail Length L1	Overall Length		M1 x P1	M2 x P2	Stroke
	L2	L3			
150	217	304.6	1 x 80	1 x 100	76
200	267	354.6	2 x 80		126
250	317	404.6		2 x 100	176
300	367	454.6	3 x 80		226

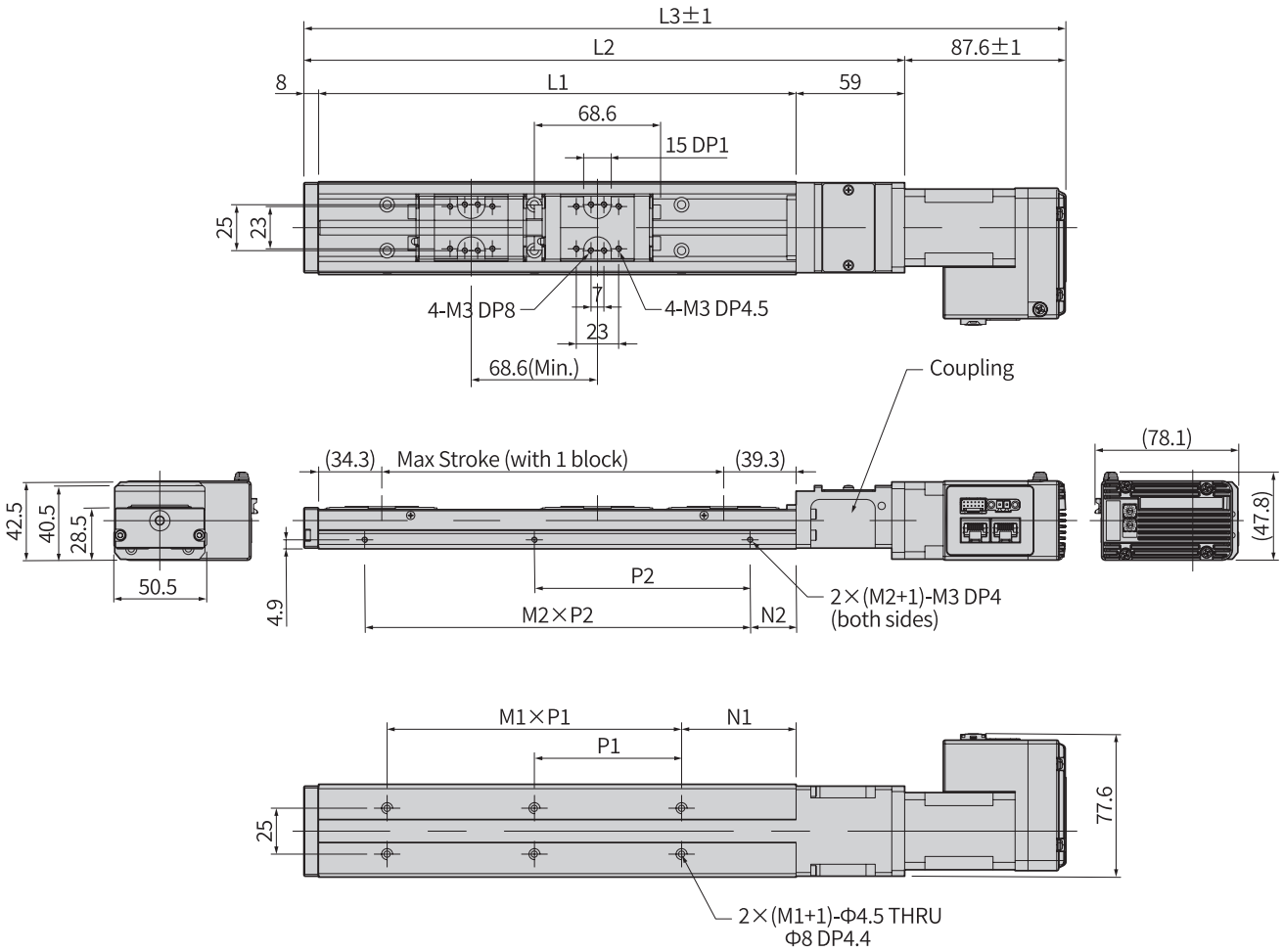

Motor Direction

Left	Down	Right	Up
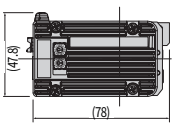	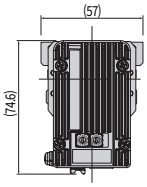	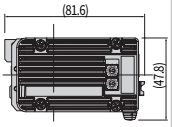	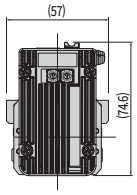

Ezi-Robo® CC-Link IE TSN IGS

Precise Actuator System

- Slider Type Electric Actuator with Stepping Motor & Ball Screw
- Repeatability (±0.005 mm)
- High Resolution Encoder (Max. 20,000 P/R)
- Size Line-up (IGS30: 37 x 29 mm, IGS40: 42 x 38 mm, IGS50: 52 x 45 mm, IGS60: 60 x 45 mm)
- Compatible with Field Networks (EtherCAT, CC-Link IE TSN, Ethernet, PROFINET, Pulse Input, RS-485)

IGS-30/40

Model		Ezi-Robo-IGS-30S-□		Ezi-Robo-IGS-40S-□ Ezi-Robo-IGS-40PL-□				
Lead	[mm]	2		2			5	
Stroke	[mm]	50	100	50	100	150	200	250
Repeatability	[mm]	±0.005		±0.005				
Maximum Speed	[mm/s]	20		100			200	
Permissible Moment	[N·m]	M_P : 25 M_Y : 25 M_R : 47		M_P : 58 M_Y : 58 M_R : 126				
Holding Force		-		560			224	

IGS-50/60

Model		Ezi-Robo-IGS-50S-□ Ezi-Robo-IGS-50PL-□		Ezi-Robo-IGS-60S-□ Ezi-Robo-IGS-60PL-□	
Lead	[mm]	5	10	5	10
Stroke	[mm]	50 ~ 100		50 ~ 100	
Repeatability	[mm]	±0.005		±0.005	
Maximum Speed	[mm/s]	250	500	250	500
Permissible Moment	[N·m]	M_P : 25 M_Y : 25 M_R : 47		M_P : 58 M_Y : 58 M_R : 126	
Holding Force		224	112	224	112

Dimension (IGS-40S)

Unit [mm]

Stroke	L1	L2	A	B	N
50	166	291.6	50	100	6
100	216	341.6	50	150	8
150	266	391.6	50	200	10
200	316	441.6	50	250	12
250	366	491.6	50	300	14

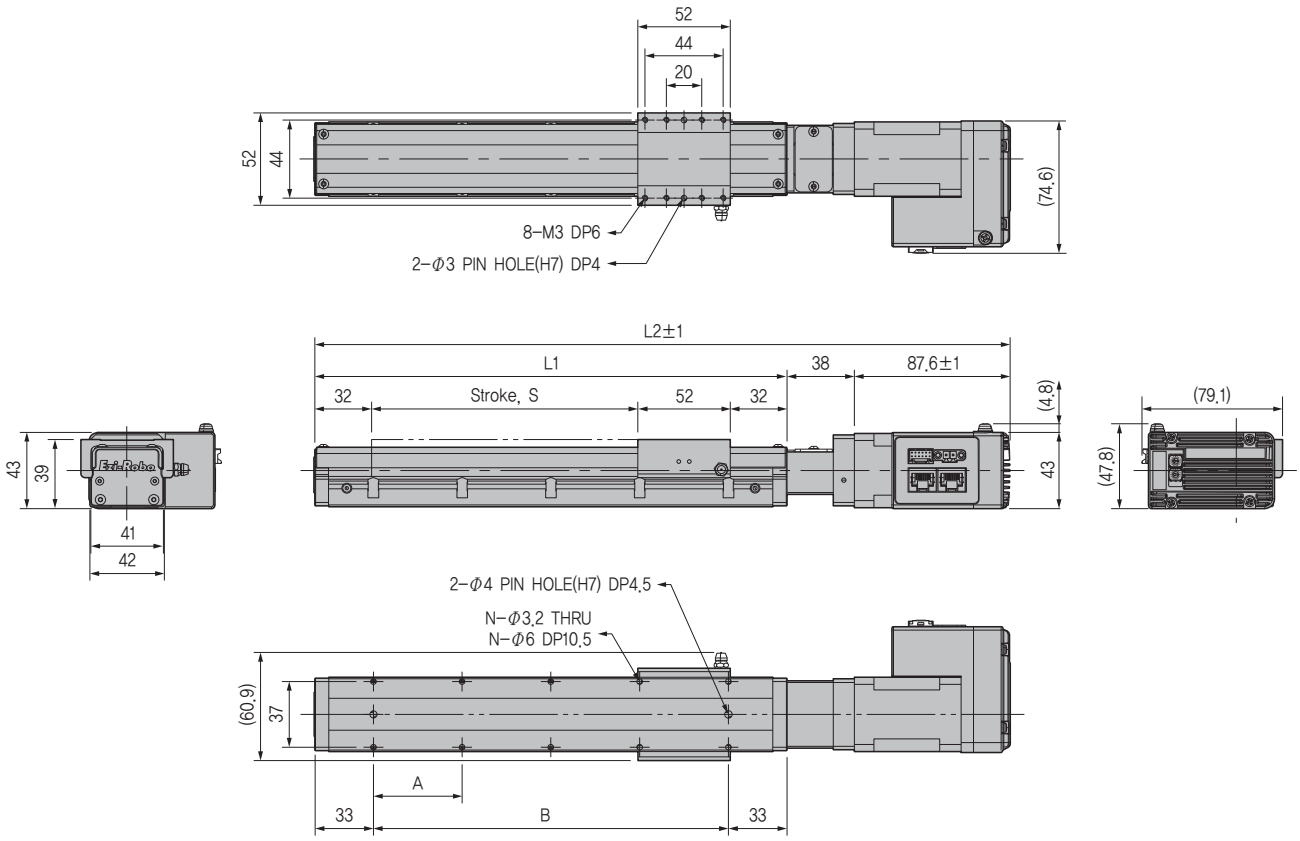

Motor Direction

Left	Down	Right	Up
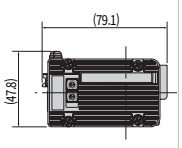	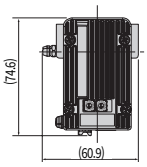	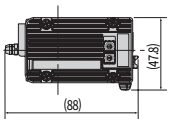	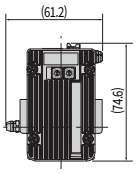

Ezi-Robo® CC-Link IE TSN VZR

Precise Actuator System

- Slim Actuator with Hollow Shaft Motor & Ball Screw Spline
- Vacuum(V) + Linear(Z) + Rotary(R), 3-in-1 Actuator
- Repeatability (Z Axis: ±0.01 mm / R Axis: ±0.1°)
- High Resolution Encoder (Max. 20,000 P/R)
- Size Line-up (28 mm, 42 mm)
- Compatible with Field Networks (EtherCAT, CC-Link IE TSN, Ethernet, PROFINET, Pulse Input)

Specifications

Model			Ezi-Robo-VZR-28-50-P6-28-D-N-□ Ezi-Robo-VZR-28-50-P6-28-D-P-□	Ezi-Robo-VZR-42-50-P10-42-B-N-□ Ezi-Robo-VZR-42-50-P10-42-B-P-□
Lead		[mm]	6	10
Repeatability	Z Axis	[mm]	±0.01	±0.01
	θ Axis	[deg]	±0.1	±0.1
Maximum Speed	Z Axis	[mm/s]	60	100
	θ Axis	[rev/s]	3	3
Maximum Acceleration	Z Axis	[mm/s^2]	0.3	0.5
	θ Axis	[rad/s^2]	150 π	150 π
Permissible Load		[kg]	0.5	1.5
Reference Thrust Force		[N]	7	25
Permissible Moment		[kg·m^2]	0.15×10^{-4}	0.35×10^{-4}
Stroke		[mm]	50	50

Dimension (VZR-42)

Unit [mm]

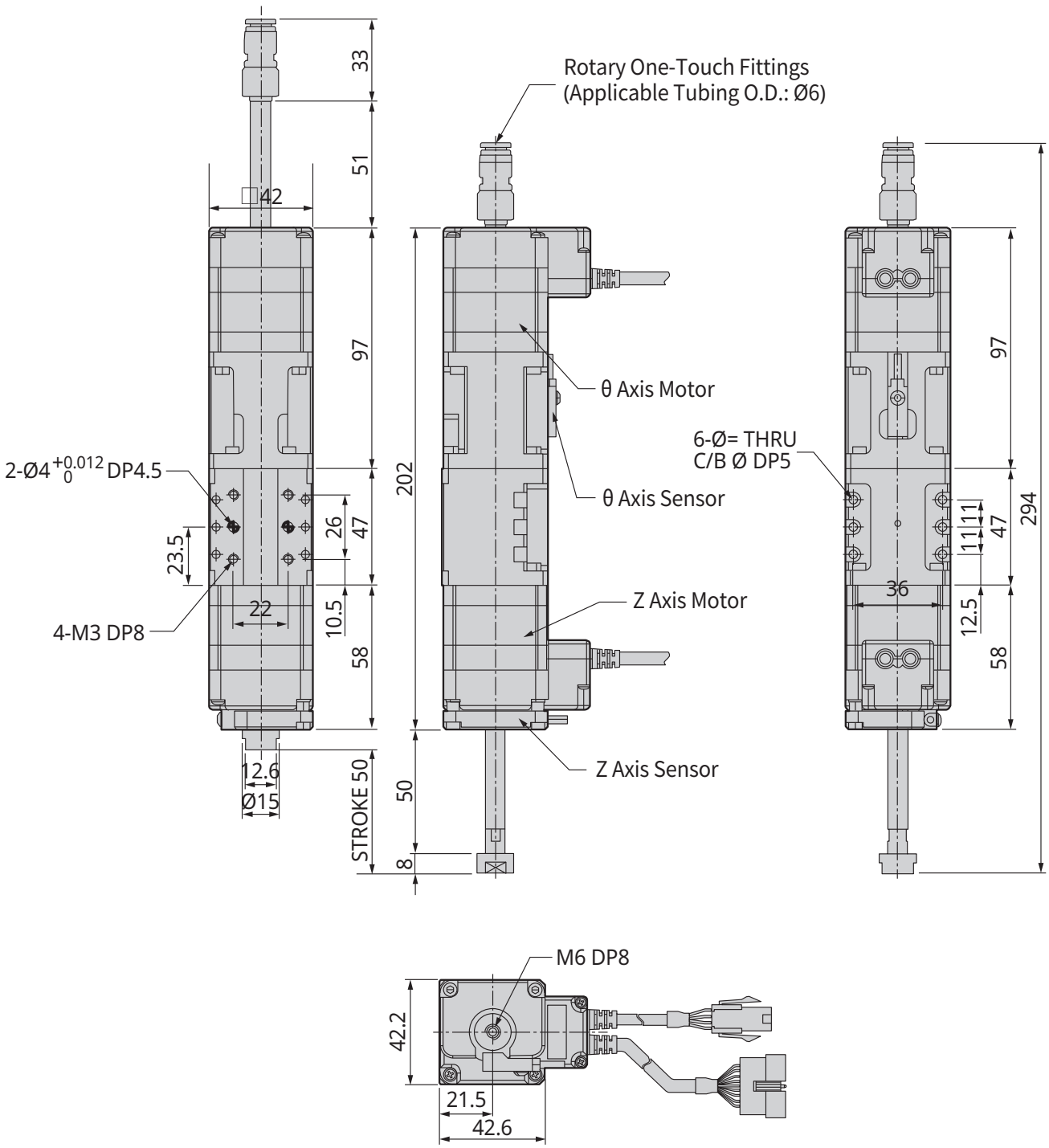

Ezi-Robo® CC-Link IE TSN CLA

Precise Actuator System

- Compact Linear Actuator with Hollow Shaft Motor & Ball Screw
- Repeatability (±0.01 mm), Lost Motion (≤ 0.05 mm)
- High Resolution Encoder (Max. 20,000 P/R)
- Size Line-up (20 mm, 28 mm, 42 mm, 56 mm)
- Compatible with Field Networks (EtherCAT, CC-Link IE TSN, Ethernet, PROFINET, Pulse Input, RS-485)

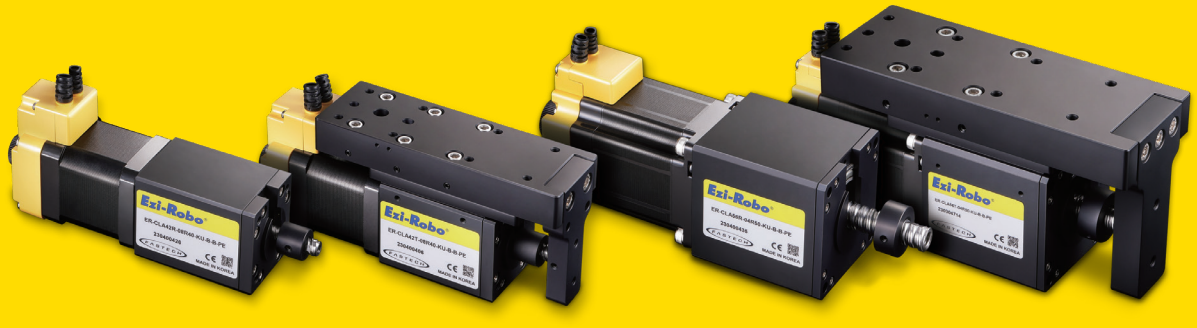

CLAT (Table Type)

Model			Ezi-Robo-CLAT-20-25R1	Ezi-Robo-CLAT-28-30R1	Ezi-Robo-CLAT-42-40R2 Ezi-Robo-CLAT-42-40R8		Ezi-Robo-CLAT-56-50R4
Lead		[mm]	1	1	2	8	4
Repeatability		[mm]	±0.01	±0.01	±0.01	±0.01	±0.01
Lost Motion		[mm]	≤ 0.05	≤ 0.05	≤ 0.05	≤ 0.05	≤ 0.05
Permissible Moment	Static	[N·m]	M_P :0.10 M_Y : 0.05 M_R : 0.15	M_P :0.3 M_Y : 0.24 M_R : 1.5	M_P :1.3 M_Y : 1.0 M_R :2.5		M_P :2.5 M_Y : 2.0 M_R : 5.0
	Dynamic	[N·m]					
Permissible Load	Horizontal	[kg]	1	4	8	5	10
	Vertical	[kg]	0.5	2	4	3	5
Stroke		[mm]	25	30	40	40	50
Maximum Speed		[mm/s]	10	10	20	80	40

CLAR (Rod Type)

Model			Ezi-Robo-CLAR-20-25R1	Ezi-Robo-CLAR-28-30R1	Ezi-Robo-CLAR-42-40R2 Ezi-Robo-CLAR-42-40R8		Ezi-Robo-CLAR-56-50R4
Lead		[mm]	1	1	2	8	4
Repeatability		[mm]	±0.01	±0.01	±0.01	±0.01	±0.01
Lost Motion		[mm]	≤ 0.05	≤ 0.05	≤ 0.05	≤ 0.05	≤ 0.05
Permissible Load	Horizontal	[kg]	0.5	4	8	4	10
	Vertical	[kg]	1	2	4	3	5
Stroke		[mm]	25	30	40	40	50
Maximum Speed		[mm/s]	10	10	20	80	40

Dimension (CLAT-42)

Unit [mm]

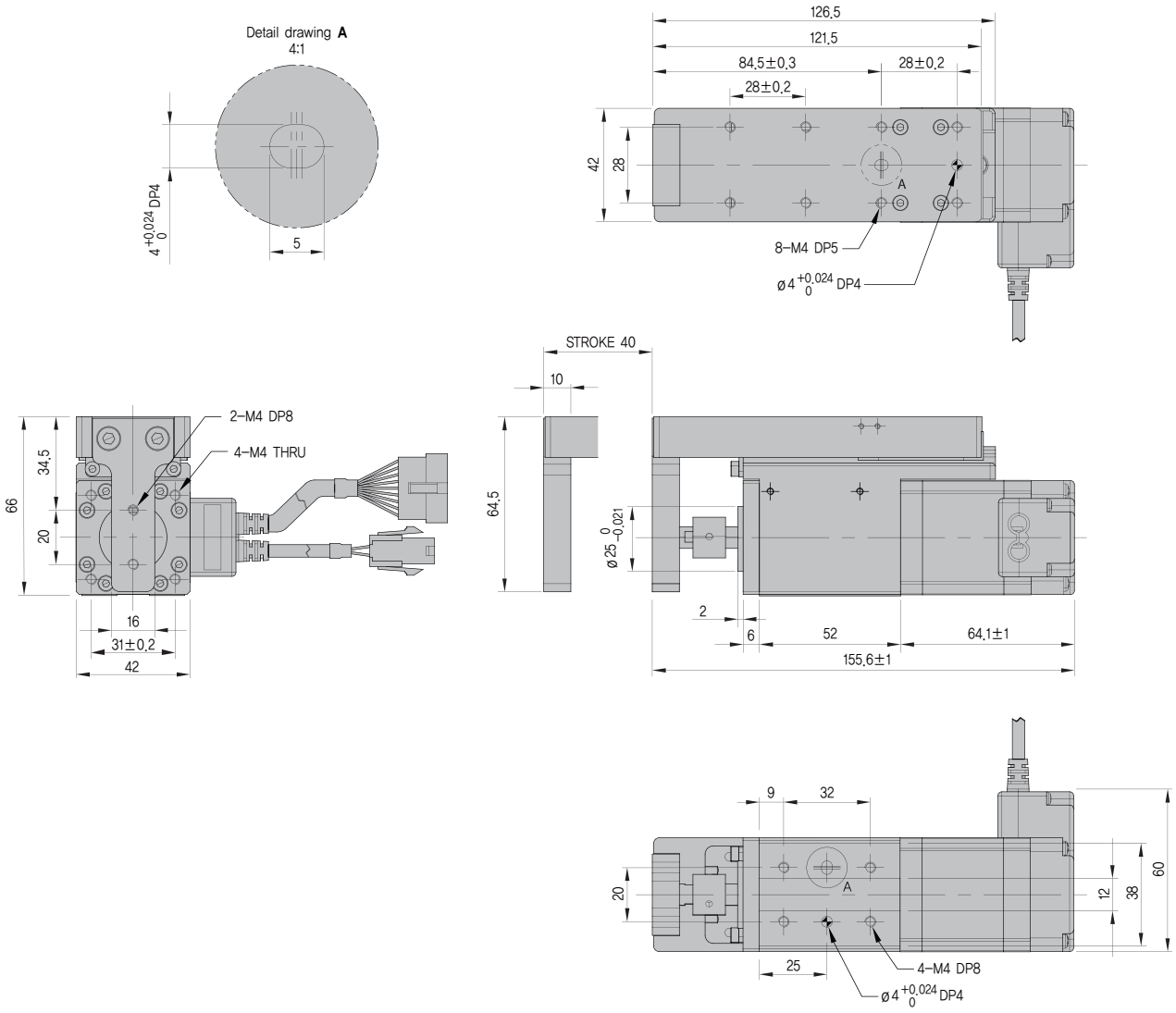

Cable Direction

Left	Down	Right	Up
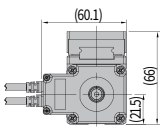	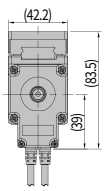	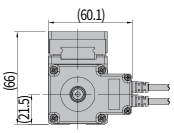	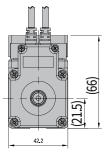

Ezi-Robo® CC-Link IE TSN HG

Precise Actuator System

- Hollow Rotary Index Table with Stepping Motor
- Repeatability (±10 arcsec)
- Hollow Diameter (Max. Ø85 mm)
- Permissible Torque (Max. 170 N·m)
- Axial Load (Max. 4000 N)
- High Resolution Encoder (Max. 20,000 P/R)
- Size Line-up (□60 mm, □100 mm, □130 mm, □170 mm)
- Compatible with Field Networks (EtherCAT, CC-Link IE TSN, Ethernet, PROFINET, Pulse Input)

Specifications

Model		Ezi-Robo -HG60-05-42XL-□	Ezi-Robo-HG100-08-60L-□	Ezi-Robo-HG130S-18-60L-□	Ezi-Robo-HG170S-20-60L-□	Ezi-Robo-HG170S-36-60L-□	Ezi-Robo-HG170S-20-86L-□	Ezi-Robo-HG170S-36-86L-□
Motor		42XL	60L	60L	60L		86L	
Output Table Supporting Bearing		Ball Bearing	Tapered Roller + Ball bearing	Cross Roller Bearing				
Permissible Torque	[N·m]	4.5	12	34	170	107	170	107
Inertia Moment	[kg·m^2]	2,330x10^{-7}	3,898x10^{-6}	3,127x10^{-5}	4,752x10^{-5}	12,351x10^{-5}	7,484x10^{-5}	21,203x10^{-5}
Permissible Speed	[r/min]	300	200	200	150	150	150	150
Gear Ratio		1:5	1:8	1:18	1:20	1:36	1:20	1:36
Holding Torque	[N·m]	2.2	12	25.1	27.8	50.2	96.1	107
Repeatability	[arcsec]	±10(±0.0028°)						
Lost Motion	[arcmin]	2(±0.033°)						
Angular Transmission Accuracy	[arcmin]	4(0.067°)						
Permissible Axial Load	[N]	100	500	2,000	3,900	4,000	3,900	4,000
Permissible Moment Load	[N·m]	2	10	50	152	200	152	200
Runout of Output Table Surface	[mm]	0.03	0.015	0.07	0.07	0.07	0.07	0.07
Runout of Output Table Inner (Outer) Dia.	[mm]	0.03	0.015	0.04	0.04	0.04	0.04	0.04
Parallelism of Output Table	[mm]	0.05	0.03	0.07	0.07	0.07	0.07	0.07
Degree of Protection		IP40						
Mass of Actuator Unit	[kg]	1.6	4.0	6.3	8.7	8.7	11.9	11.9

Dimension (HG170S)

Unit [mm]

RB-HG170S-20-60L-□
RB-HG170S-36-60L-□

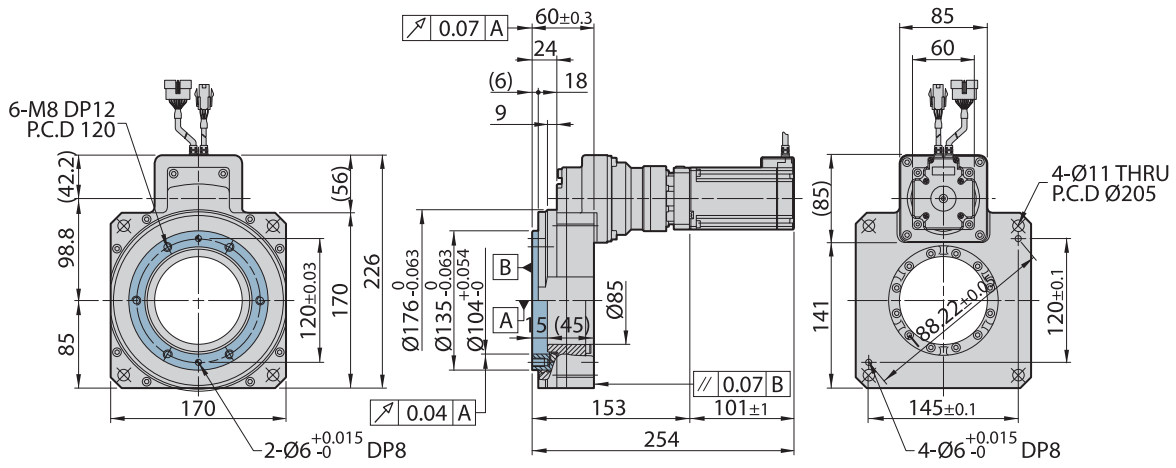

RB-HG170S-20-86L-□
RB-HG170S-36-86L-□

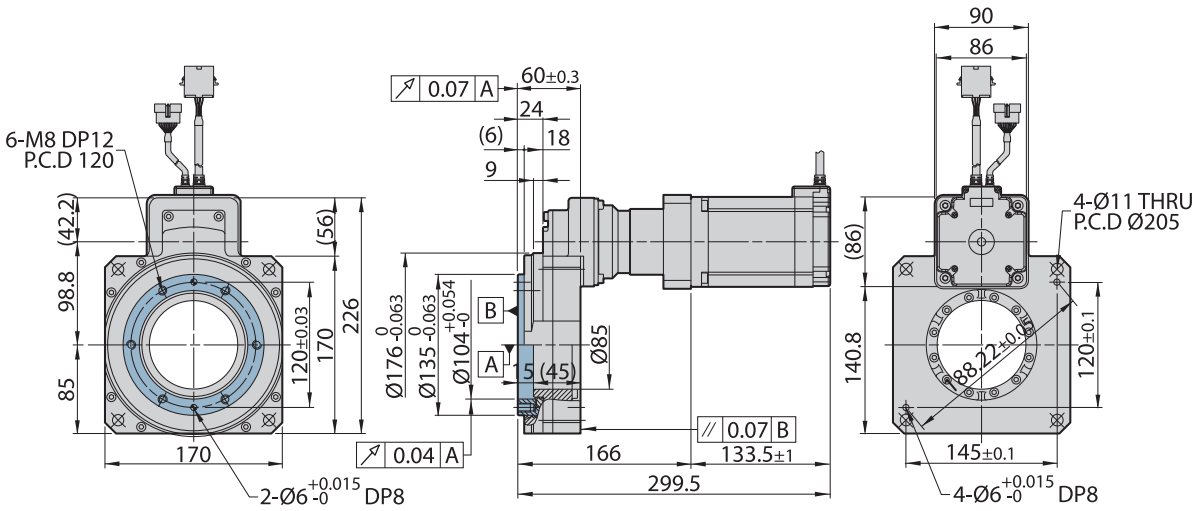

※ □ is a drive type.

Motors for Ezi-SERVO® II Series

Closed Loop Stepping System

Dimensions of Motor [mm]

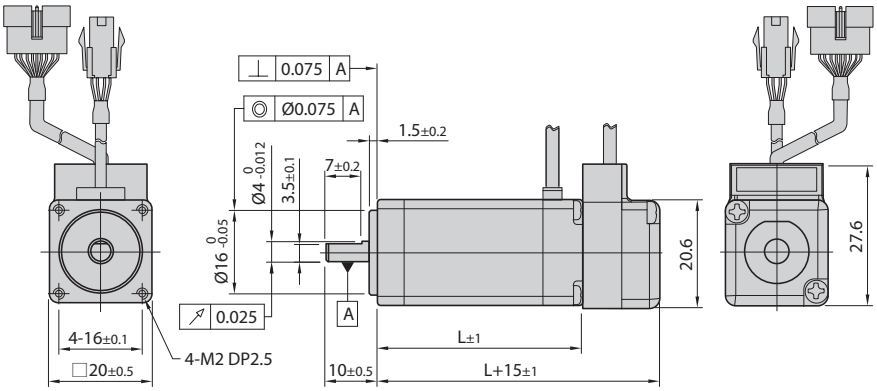

20 mm

Model name	Length(L)
EzM2-20M	28
EzM2-20L	38

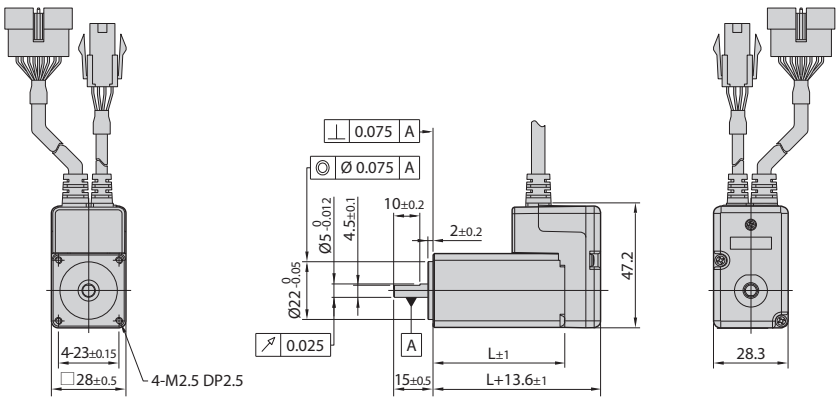

28 mm

(Stopper type)

Model name	Length(L)
EzM2-28SM	32
EzM2-28MM	45
EzM2-28LM	50

※ When ordering 28 mm Stopper type of motor, please add “M” after standard motor model number.

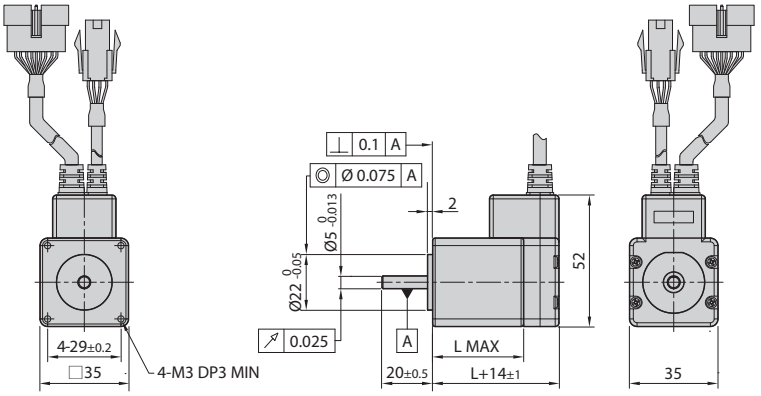

35 mm

(Stopper type)

Model name	Length(L)
EzM2-35MM	32
EzM2-35LM	36

※ When ordering 35 mm Stopper type of motor, please add "M" after standard motor model number.

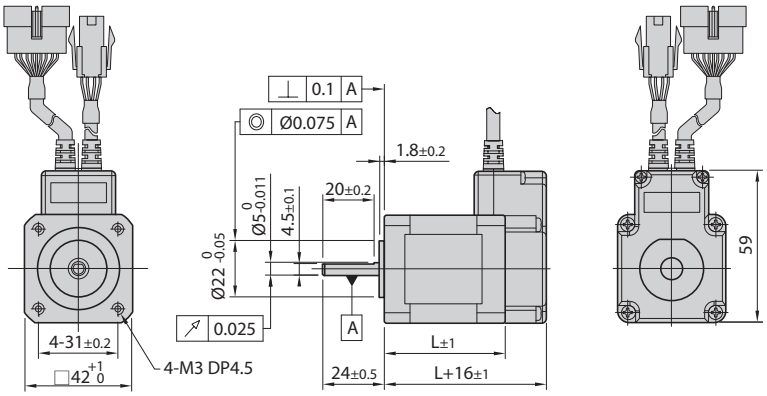

42 mm

Model name	Length(L)
EzM2-42S	34
EzM2-42M	40
EzM2-42L	48
EzM2-42XL	60

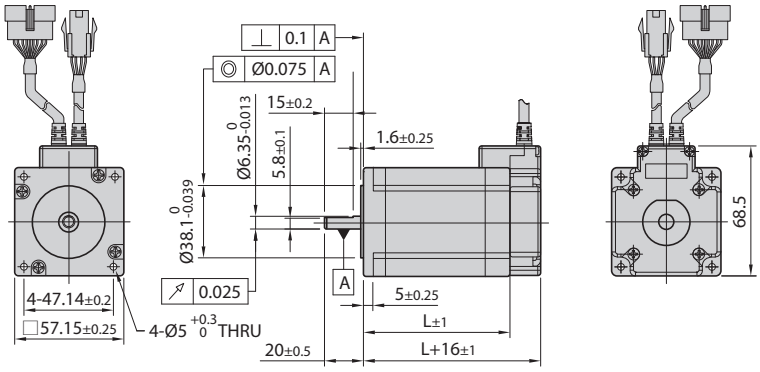

56 mm

Model name	Length(L)
EzM2-56S	46
EzM2-56M	55
EzM2-56L	80

※ There are 2 kinds size of front shaft diameter for EzM2-56 series as Ø6.35 and Ø8.0.

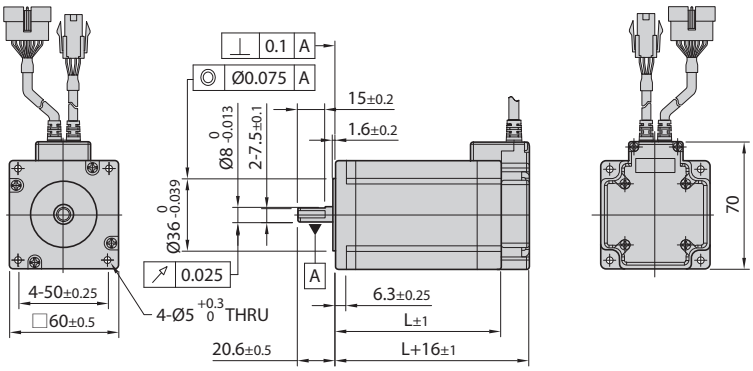

60 mm

Model name	Length(L)
EzM2-60S	47
EzM2-60M	56
EzM2-60L	85

Motors for Ezi-SERVO® II ABS Series

Closed Loop Stepping System

Dimensions of Motor [mm]

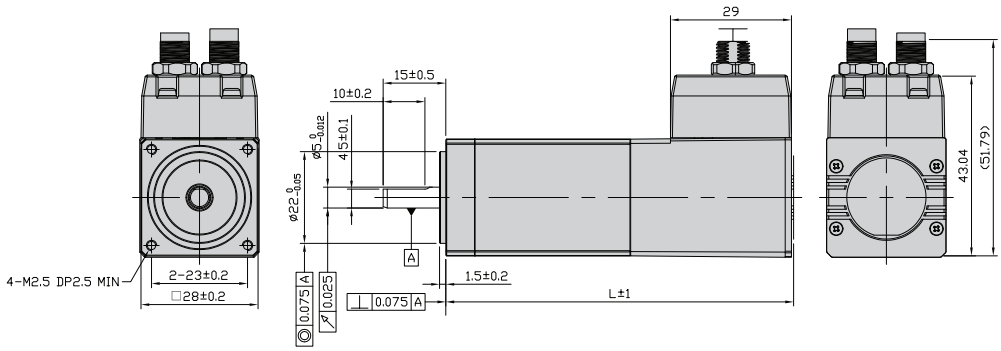

28 mm

Model name	Length(L)
EzM2-28S-AB	63.7
EzM2-28M-AB	76.7
EzM2-28L-AB	83.3

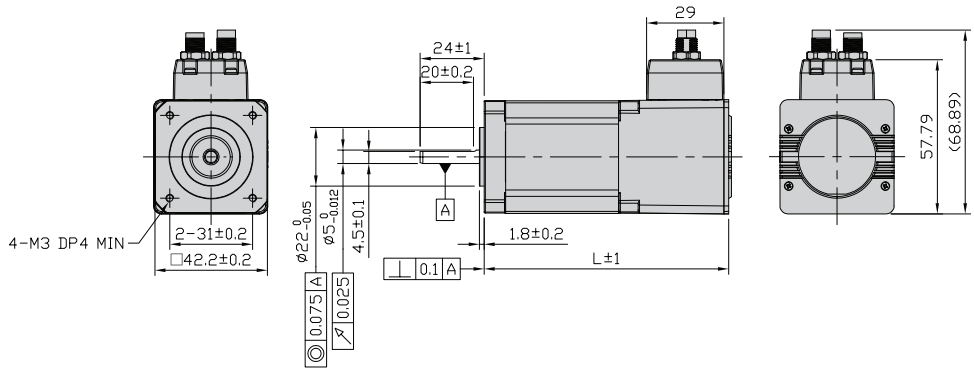

42 mm

Model name	Length(L)
EzM2-42S-AB	65.7
EzM2-42M-AB	71.7
EzM2-42L-AB	79.7
EzM2-42XL-AB	91.7

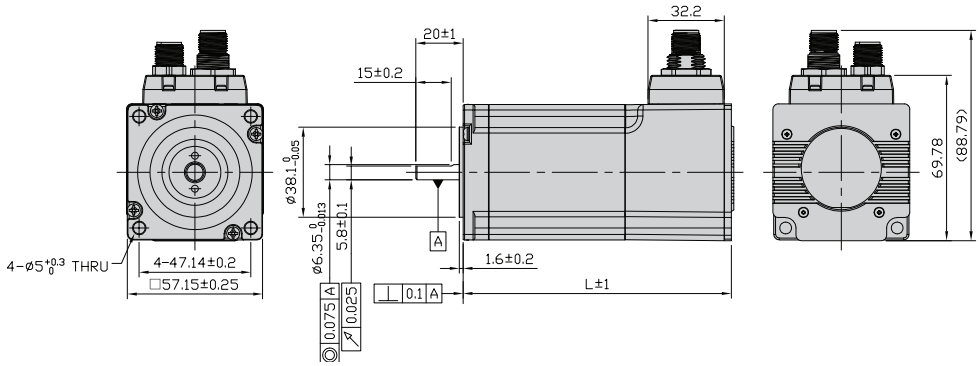

56 mm

Model name	Length(L)
EzM2-56S-AB	78.3
EzM2-56M-AB	88.3
EzM2-56L-AB	113.3

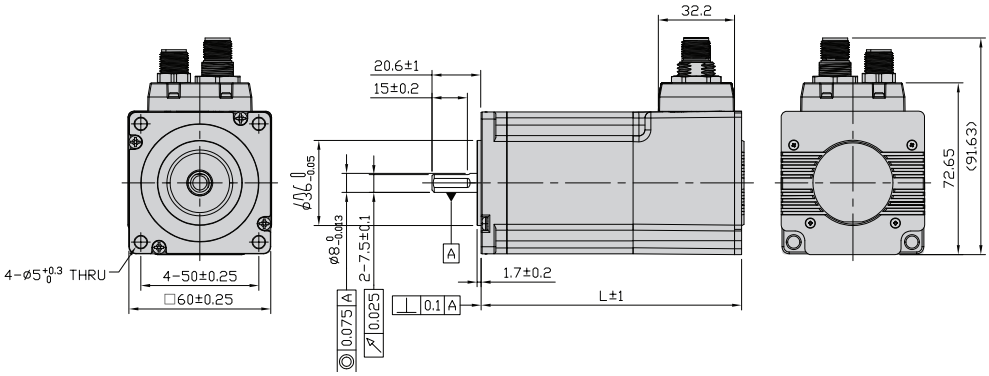

60 mm

Model name	Length(L)
EzM2-60S-AB	80.7
EzM2-60M-AB	89.2
EzM2-60L-AB	110.2

Motors & Gearboxes for Ezi-SPEED® Series

BLDC Motor Speed Control System

Dimensions of Motors [mm]

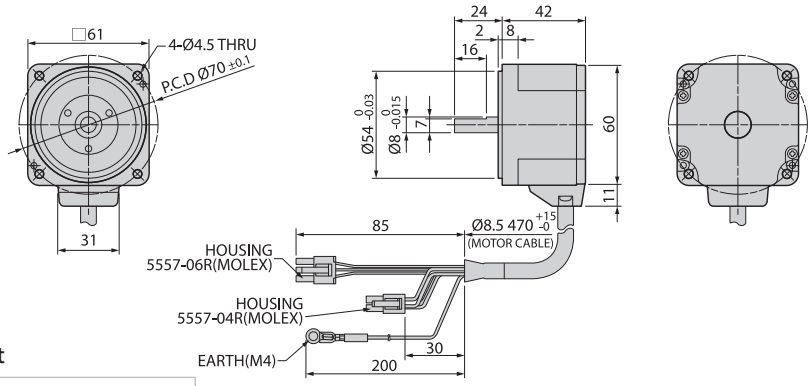

30 W

ESM-60-S-30(AC)
ESMD-60-S-30(DC)

DC power product

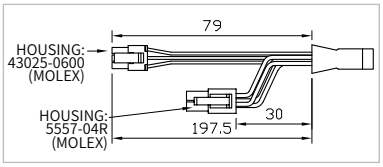

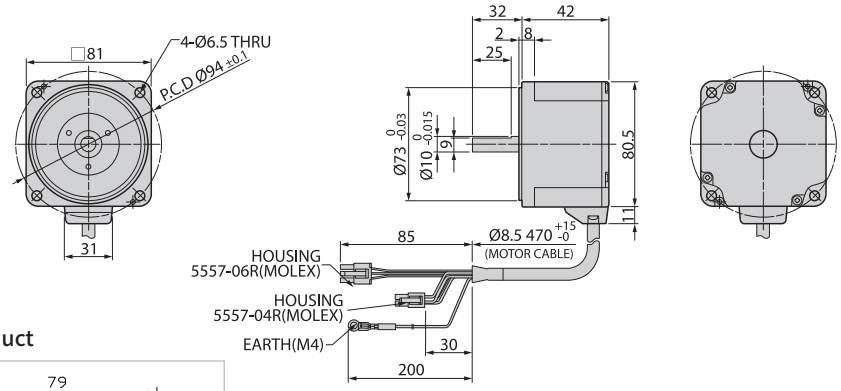

60 W

ESM-80-S-60(AC)
ESMD-80-S-60(DC)

DC power product

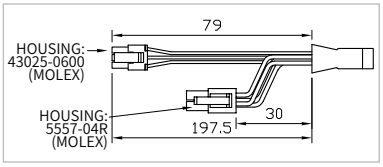

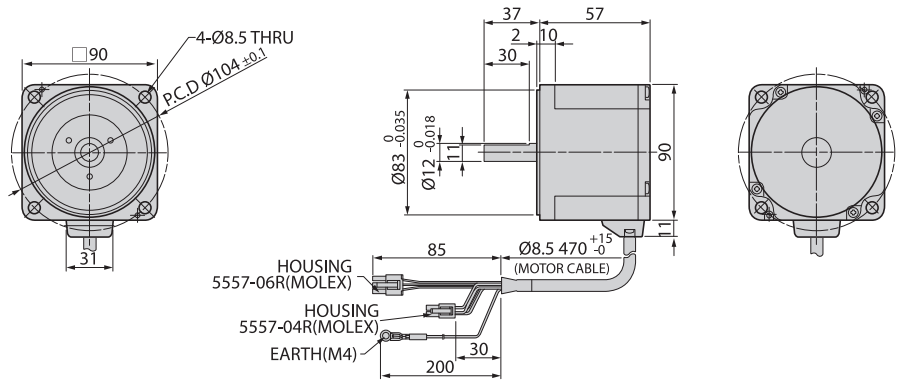

120 W

ESM-90-S-120(AC)
ESMD-90-S-120(DC)

DC power product

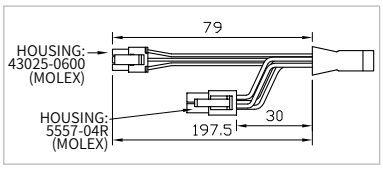

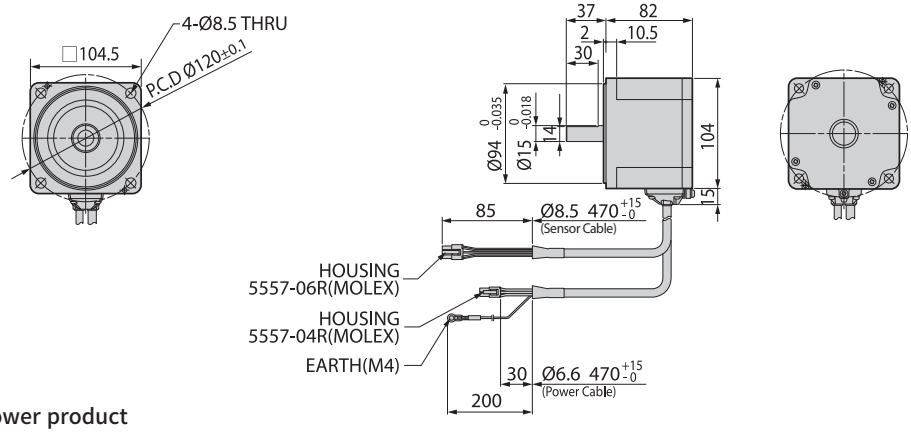

200 W

ESM-104-S-200(AC)
ESMD-104-S-200(DC)

DC power product

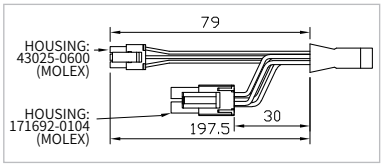

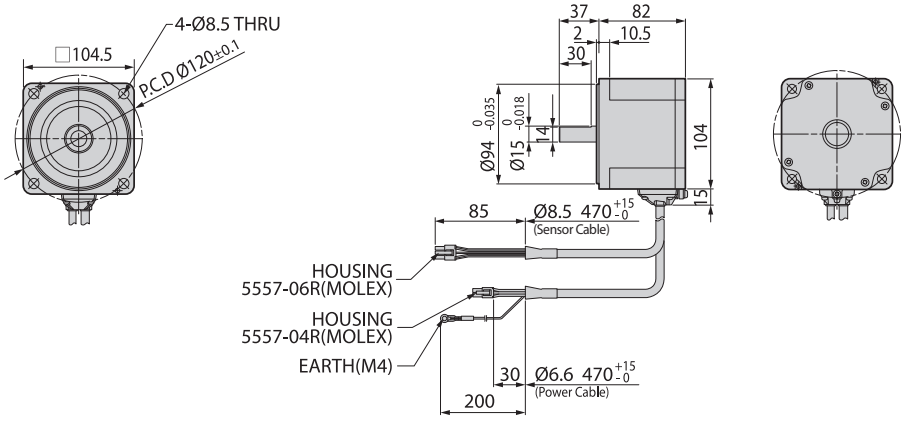

400 W

ESM-104-S-400(AC)

Dimensions of Motors & Parallel Gearboxes [mm]

30 W

Gearbox Part Number	□Gear Ratio	Mounting Bolt	L [mm]
	5, 10, 15, 20	M4×50	34
ESG-60-H-R□-P	30, 50, 100	M4×55	38
	200	M4×60	43

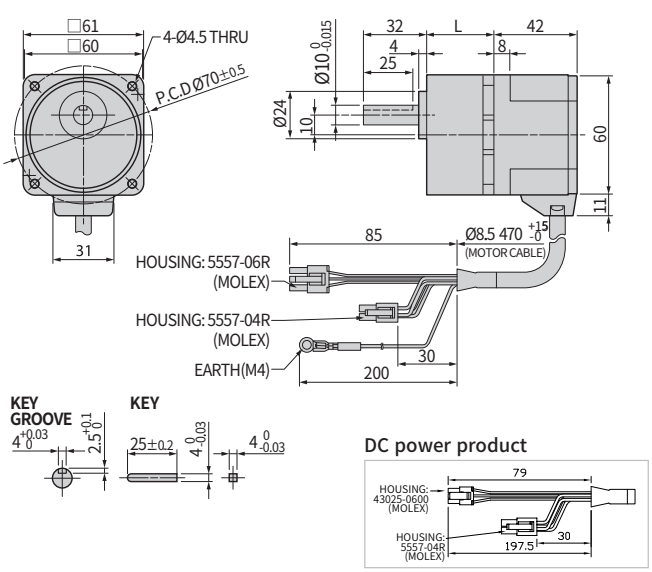

60 W

Gearbox Part Number	□Gear Ratio	Mounting Bolt	L [mm]
	5, 10, 15, 20	M4×65	41
ESG-80-H-R□-P	30, 50, 100	M4×70	46
	200	M4×75	51

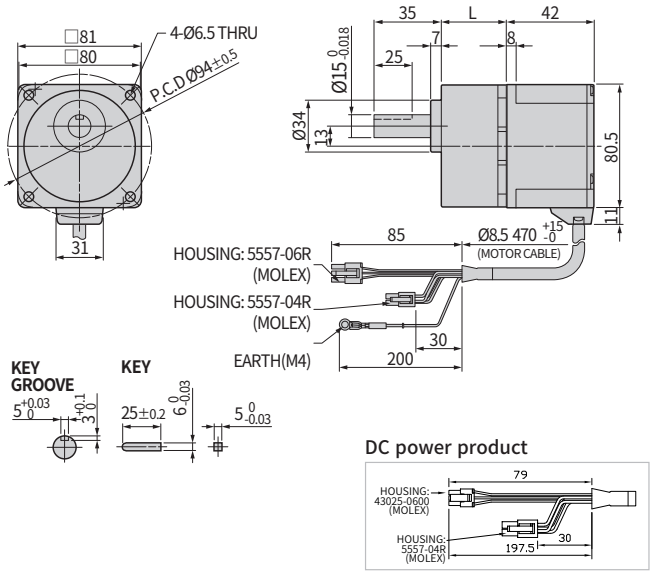

120 W

Gearbox Part Number	□Gear Ratio	Mounting Bolt	L [mm]
	5, 10, 15, 20	M8×75	45
ESG-90-H-R□-P	30, 50, 100	M8×90	58
	200	M8×95	64

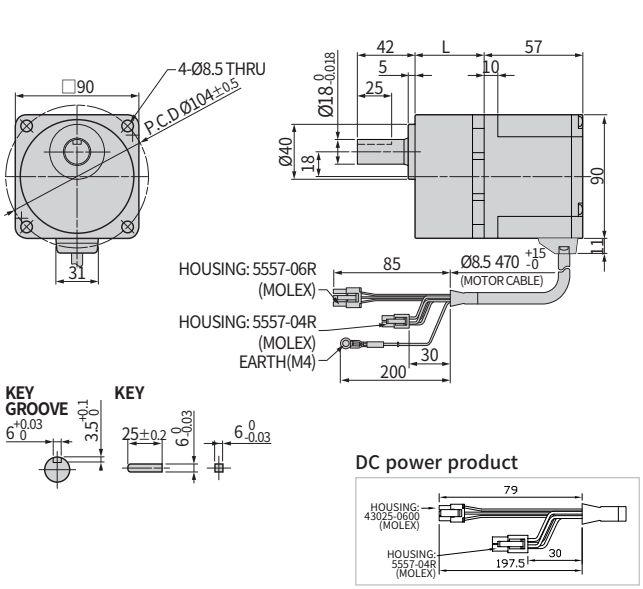

200 W 400 W

Gearbox Part Number	□Gear Ratio	Mounting Bolt	L [mm]
	5, 10, 15, 20	M8×95	60
ESG-104-H-R□-P	30, 50	M8×110	72
	100, 200	M8×120	86

* DC power product : 200 W only

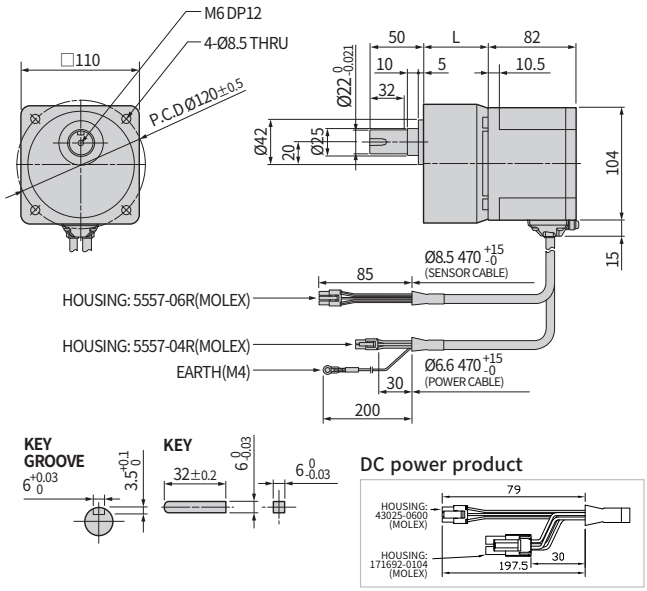

Dimensions of Motors & Hollow Flat Gearboxes [mm]

30 W

Gearbox Part Number	□Gear Ratio	Mounting Bolt
ESG-60-H-R□-H	5, 10, 15, 20, 30, 50, 100, 200	M5×65

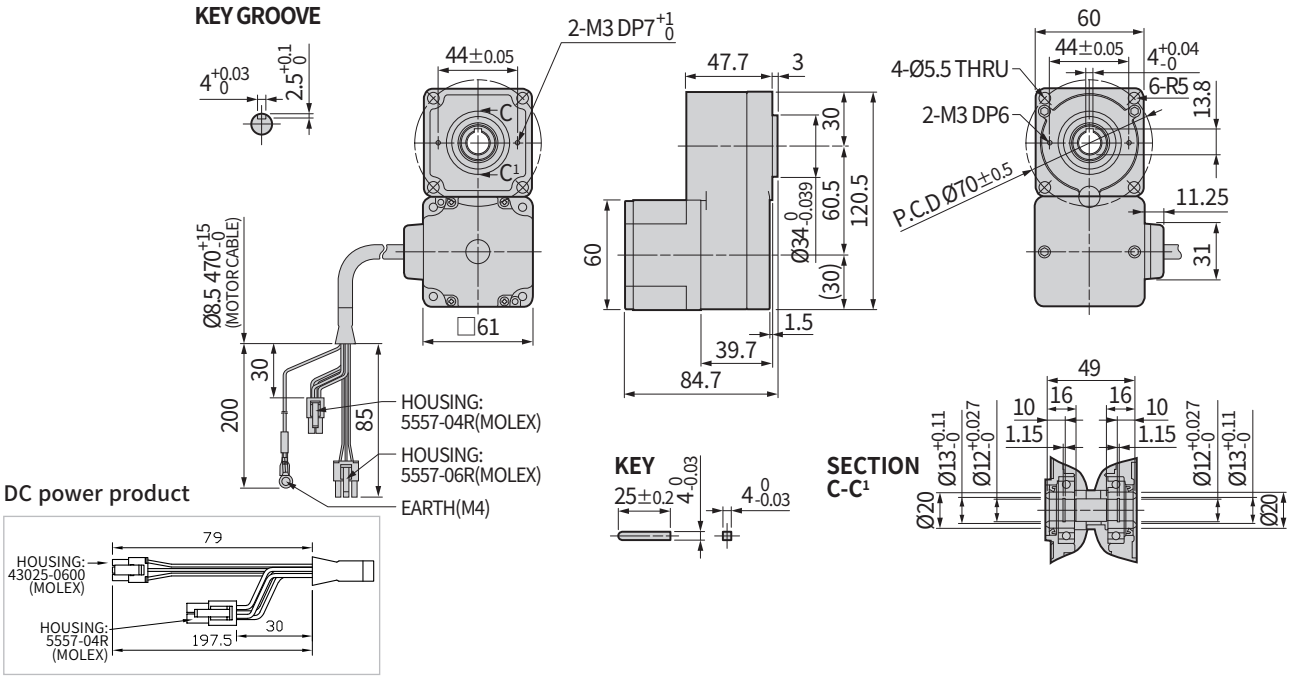

60 W

Gearbox Part Number	□Gear Ratio	Mounting Bolt
ESG-80-H-R□-H	5, 10, 15, 20, 30, 50, 100, 200	M6×70

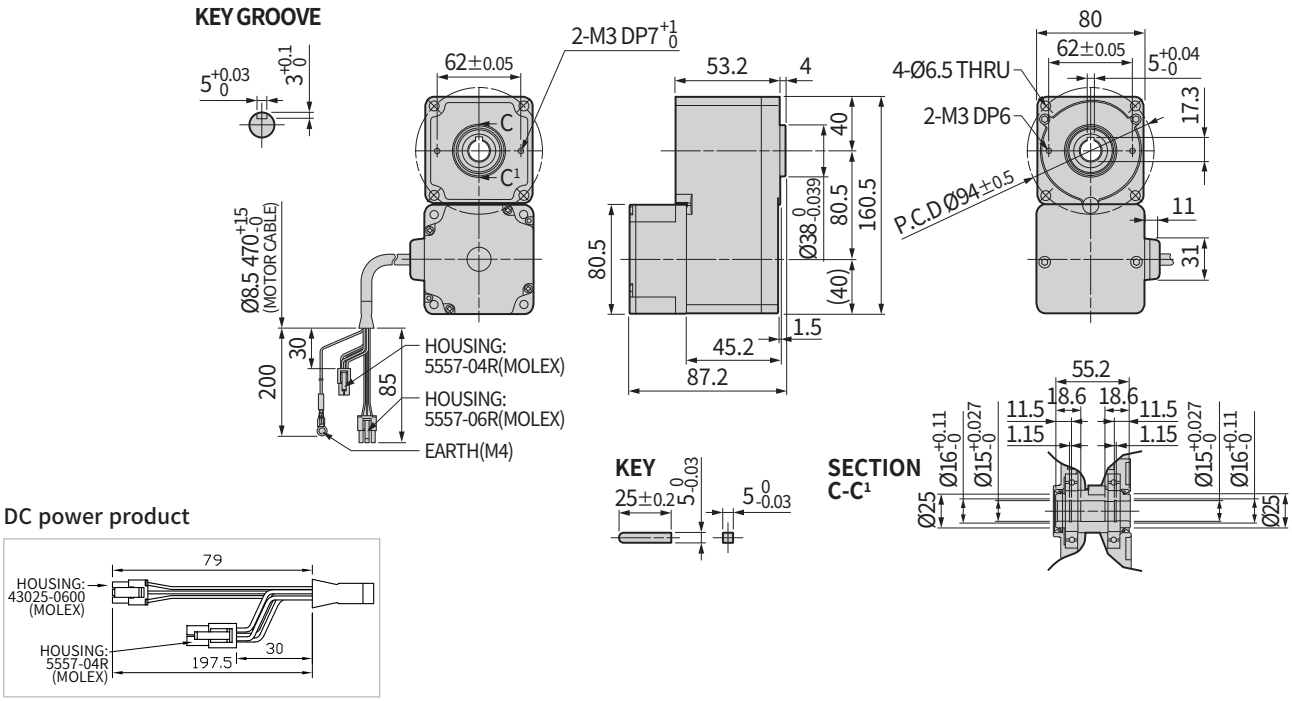

Dimensions of Motors & Hollow Flat Gearboxes [mm]

120 W

Gearbox Part Number	□Gear Ratio	Mounting Bolt
ESG-80-H-R□-H	5, 10, 15, 20, 30, 50, 100, 200	M6×70

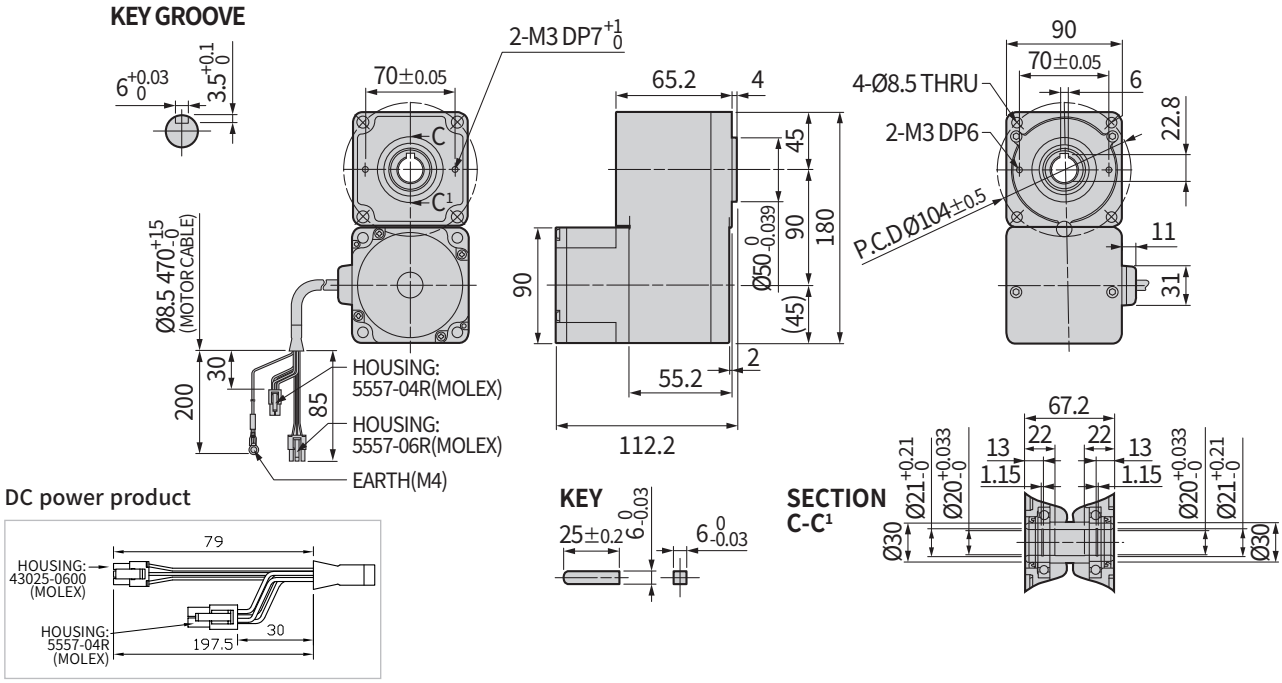

200 W 400 W

Gearbox Part Number	□Gear Ratio	Mounting Bolt
ESG-80-H-R□-H	5, 10, 15, 20, 30, 50, 100, 200	M6×70

* DC power product : 200 W only

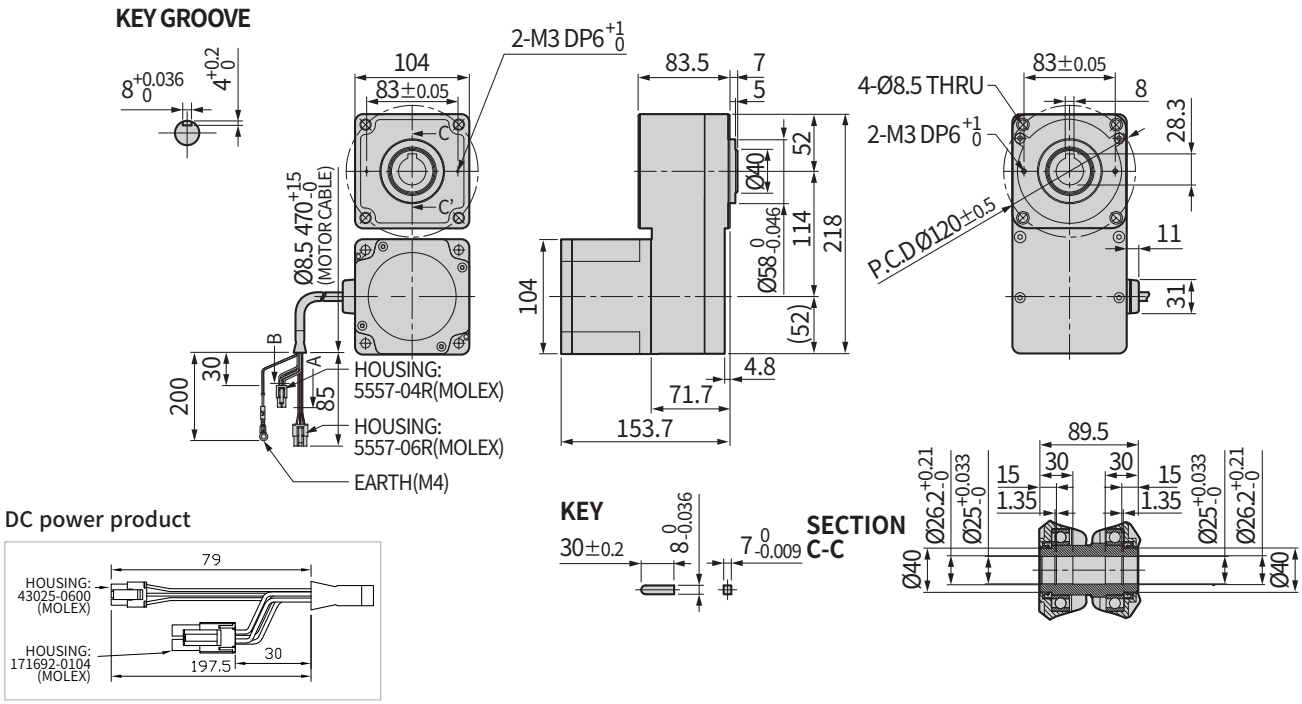

OPTION Brake

Model	Motor / Brake Size		
	42 mm	56 mm	60 mm
Ezi-SERVOII CC-Link IE TSN	O	O	O
Ezi-SERVOII CC-Link IE TSN 4X	O	O	O
Ezi-SERVOII CC-Link IE TSN ALL	O	O	O
Ezi-STEPII CC-Link IE TSN	O	O	O

OPTION Gearbox

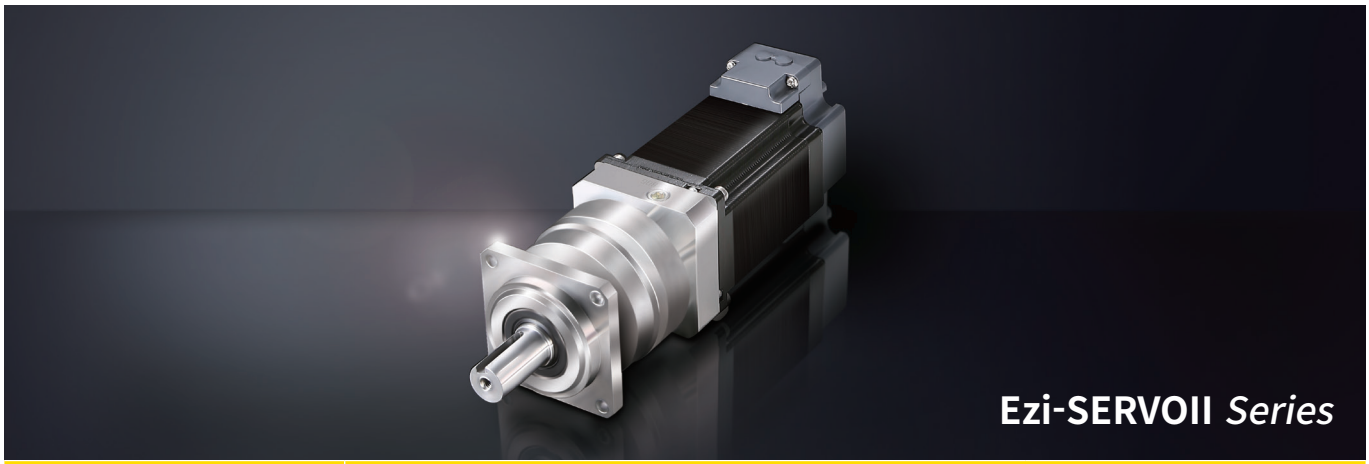

Model	Gearbox Size		
	42 mm	60 mm	
	Motor Size		
	42 mm	56 mm	60 mm
Ezi-SERVOII CC-Link IE TSN	O	O	O
Ezi-SERVOII CC-Link IE TSN 4X	O	O	O
Ezi-SERVOII CC-Link IE TSN ALL	O	O	O

※ Gear Ratio: 3, 5, 8, 10, 15, 25, 40, 50

CCT-LINKTS

บริษัท นานดีอินเตอร์เทรด จำกัด
NANDEE INTER-TRADE CO., LTD.
314,316,318,320,322 ซอยจันทน์32 ถนนจันทน์ แขวงทุ่งวัดดอน เขตสาทร กทม. 10120

: 0-2675-8239
: @nandeeintertrade
: nandeeintertrade
: www.nandee.co.th
: marketing@nandee.co.th
sales@nandee.co.th