Vacuum Cups VS-PG Series

VS-PG2...VS-PG10

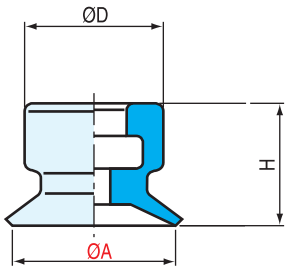

VS-PG15...VS-PG50

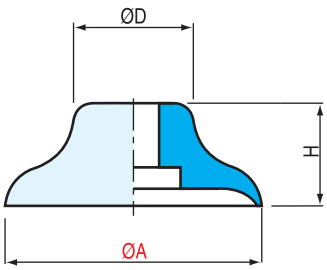

VS-PG60...VS-PG80

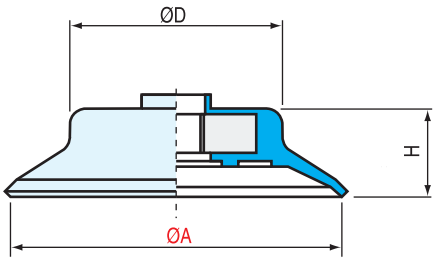

	(N)(1)	(N)(1)	ØA(mm)	H(mm)	ØD(mm)	STN	SI	NBR
VS-PG2	0.5	0.1	2	4	4	-	1.Y03289	1.Y09807
VS-PG3.5	0.7	0.2	3.5	4	4	-	1.Y03290	1.Y09808
VS-PG5	0.9	0.3	5	6.5	7.5	-	1.Y03291	1.Y09809
VS-PG6	1.0	0.4	6	6.5	7.5	1.Y05881	1.Y03292	1.Y09810
VS-PG8	1.1	0.5	8	7	8	1.Y05882	1.Y03293	1.Y09811
VS-PG10	1.6	0.8	10	7.5	8.7	1.Y05883	1.Y03294	1.Y09812
VS-PG15	3.7	1.8	15	8	12	1.Y05884	1.Y03301	1.Y09813
VS-PG20	6.1	3.0	20	10	15	1.Y05885	1.Y03295	1.Y09814
VS-PG25	9.4	4.7	25	14	16	1.Y05886	1.Y03296	1.Y09815
VS-PG30	15.9	7.9	30	12	15	1.Y05887	1.Y03297	1.Y09816
VS-PG35	23.1	11.6	35	14	20.5	-	1.Y03298	1.Y09817
VS-PG40	26.7	13.4	40	14	23.5	1.Y05889	1.Y03299	1.Y09818
VS-PG50	38.3	19.1	50	15	29	1.Y05890	1.Y03300	1.Y09819
VS-PG60	57.8	28.9	60	16	38	1.Y05891	1.Y03302	1.Y09820
VS-PG80	101.1	50.6	80	18	53	1.Y05892	1.Y03303	1.Y09821

(1) Actual force of the suction cup in use with 65% vacuum and including a safety factor of 2 for horizontal handling and a factor of 4 for vertical handling.

Types of assembly

Factory-crimped fitting:

Hollow shaft fitting:

Removable fitting:
(adapter and hollow screw)

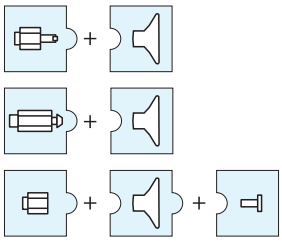

Vacuum Cup Fitting	Vacuum Cups
VM14-M5	VS-PG2~VS-PG3.5
VM13-M5	VS-PG5~VS-PG10
VM11-M5	VS-PG15~VS-PG20
VM-G18M-M5F+VM22-M5	VS-PG25~VS-PG40
VM28-M8+VM-G18M-M8F VM28-M8+VM-G14M-M8F	VS-PG50
VM-G14M-M10M	VS-PG60~VS-PG80

Materials	Shore Hardness	A Flexibility	Abrasion resistance	UV & weather resistance	Oil resistance	Heat resistance (in °C)	
SI: Translucent Silicone	50	+++	-	-	-	-40 to 220	Translucent
STN: Siton®	60	+	++	-	++	0 to 160	Blue
NBR: Nitrile	60	+	+	-	++	0 to 80	Black

Vacuum Cups VS2 Series

VS2-SA5

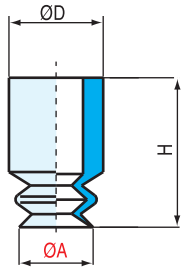

VS2-SA11...VS2-SA25

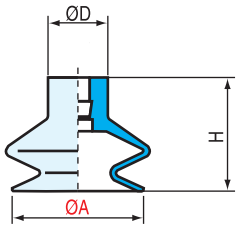

VS2-SA26...VS2-SA43

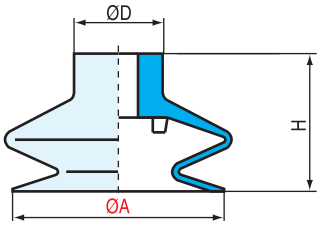

VS2-SA53...VS2-SA63

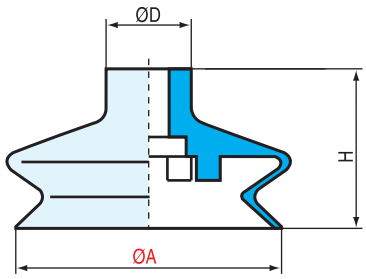

	(N)(1)	(N)(1)	ØA(mm)	H(mm)	ØD(mm)	STN	SIT5	NBR
VS2-SA5	0.5	0.2	5.5	11	7	1.Y05308	1.Y05178	1.Y09822
VS2-SA11	1.7	0.9	11	16	10	1.Y04899	1.Y03085	1.Y09823
VS2-SA14	2.5	1.3	13	16	10	1.Y05309	1.Y03311	1.Y09824
VS2-SA16	2.7	1.3	16	19	10	1.Y04659	1.Y03086	1.Y09825
VS2-SA18	4.4	2.2	18	16.5	10	1.Y05315	1.Y05317	1.Y09826
VS2-SA20	5.6	2.8	19	16	10	1.Y05310	1.Y03088	1.Y09827
VS2-SA22	6.1	3.1	22	19	10	1.Y04658	1.Y03312	1.Y09828
VS2-SA25	7.9	4.0	24	23	10	1.Y04657	1.Y03089	1.Y09829
VS2-SA33	13.9	6.9	33	27.5	18	1.Y04656	1.Y03090	1.Y09830
VS2-SA43	20.2	10.1	43	28	18	1.Y04655	1.Y04636	1.Y09831
VS2-SA53	42.6	21.3	53	34	18	1.Y04654	1.Y03313	1.Y09832
VS2-SA63	59.2	29.6	63	34	18	1.Y04653	1.Y04637	1.Y09833

(1) Actual force of the suction cup in use with 65% vacuum and including a safety factor of 2 for horizontal handling and a factor of 4 for vertical handling.

Types of assembly

Factory-crimped fitting:

Hollow shaft fitting:

Removable fitting:
(adapter and hollow screw)

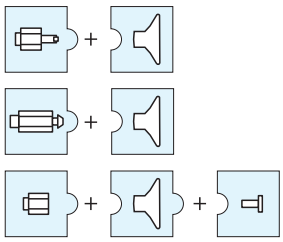

Vacuum Cup Fitting	Vacuum Cups
VM21-M5	VS2-SA5
VM18-M5 VM02-G18	VS2-SA11~VS2-SA25
VM08-M8+VM-G18M-M8F VM08-M8+VM-G14M-M8F VM04-G14 VM24-G18	VS2-SA33~VS2-SA63

Materials	Shore Hardness	A Flexibility	Abrasion resistance	UV & weather resistance	Oil resistance	Heat resistance (in °C)	
STN: Siton®	60	+	++	-	++	0 to 160	Blue
SIT5: Translucent Silicone	50	+++	-	+++	-	-40 to 220	Translucent
NBR: Nitrile	60	+	+	-	++	0 to 80	Black

Vacuum Cups VS3 Series

VS3-S5...VS3-S9

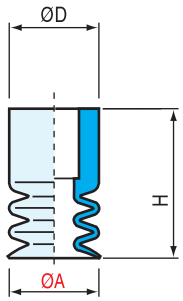

VS3-S12...VS3-S25

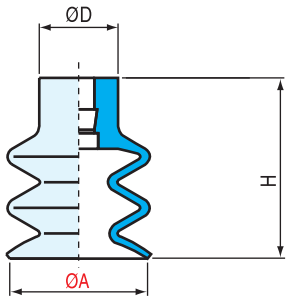

VS3-S26...VS3-S62

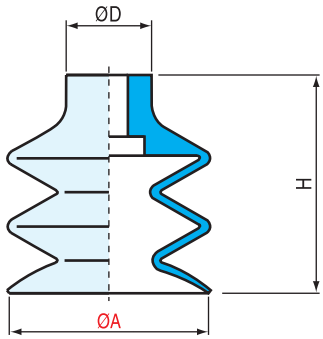

	(N)(1)	ØA(mm)	H(mm)	ØD(mm)	STN	SIT5	NBR
VS3-S5	0.5	5	13.5	7	1.Y05304	1.Y05297	1.Y09834
VS3-S7	0.9	7	13.5	9	1.Y05286	1.Y05636	1.Y09836
VS3-S9	1.1	9	15	9	1.Y05634	1.Y05299	1.Y09837
VS3-S12	2.8	12	21	10	1.Y05630	1.Y05300	1.Y09838
VS3-S14	3.0	14	23	10	1.Y05635	1.Y05301	1.Y09839
VS3-S18	4.4	17.5	23	10	1.Y05305	1.Y05302	1.Y09840
VS3-S20	4.6	20	23	10	1.Y05287	1.Y03314	1.Y09841
VS3-S25	6.5	25	34	10	1.Y05288	1.Y03315	1.Y09842
VS3-S32	12.1	32	37.5	18	1.Y05289	1.Y03316	1.Y09843
VS3-S42	20.9	42	46	18	1.Y05290	1.Y03317	1.Y09844
VS3-S52	28.9	52	49	18	1.Y05291	1.Y03318	1.Y09845
VS3-S62	41.2	62	55	21	1.Y05292	1.Y03319	1.Y09846

(1) Actual force of the suction cup in use with 65% vacuum and including a safety factor of 2 for horizontal handling and a factor of 4 for vertical handling.

Types of assembly

Factory-crimped fitting:

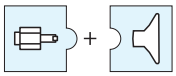

Hollow shaft fitting:

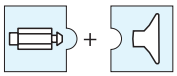

Removable fitting:
(adapter and hollow screw)

Vacuum Cup Fitting	Vacuum Cups
VM21-M5	VS3-S5~VS3-S7
VM18-M5 VM02-G18	VS3-S9~VS3-S25
VM08-M8+VM-G18M-M8F VM08-M8+VM-G14M-M8F VM04-G14 VM24-G18	VS3-S32~VS3-S62

Materials	Shore Hardness	A Flexibility	Abrasion resistance	UV & weather resistance	Oil resistance	Heat resistance (in °C)	
STN: Siton®	60	+	++	-	++	0 to 160	Blue
SIT5: Translucent Silicone	50	+++	-	+++	-	-40 to 220	Translucent
NBR: Nitrile	60	+	+	-	++	0 to 80	Black

Vacuum Cups VS-PO Series

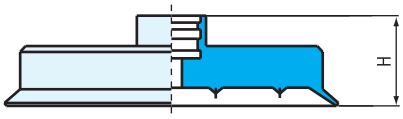

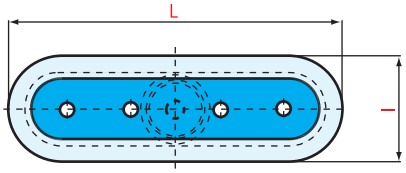

	L(mm)	I(mm)	H(mm)	STN	SI
VS-PO24	4	2	6	1.Y08504	1.Y08506
VS-PO357	7	3.5	6	1.Y08505	1.Y08507
VS-PO515	15	5	12	1.Y05638	1.Y03306
VS-PO618	18	6	12	1.Y05639	1.Y03307
VS-PO824	24	8	12	1.Y05640	1.Y03308
VS-PO1030	30	10	12	1.Y05641	1.Y03309
VS-PO1545	45	15	21	1.Y05642	1.Y03310
VS-PO2060	60	20	21	1.Y05643	1.Y05646
VS-PO2575	75	25	21	1.Y05644	1.Y05647
VS-PO3090	90	30	21	1.Y05645	1.Y05648

Types of assembly

Factory-crimped fitting:

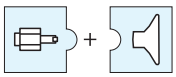

Hollow shaft fitting:

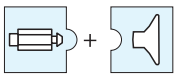

Removable fitting:
(adapter and hollow screw)

Vacuum Cup Fitting	Vacuum Cups
VM25-M3	VS-PO24~VS-PO357
VM12-M5	VS-PO515~VS-PO618
VM16-G18	VS-PO824~VS-PO1030
VM06-G14	VS-PO1545~VS-PO3090

Materials	Shore Hardness	A Flexibility	Abrasion resistance	UV & weather resistance	Oil resistance 抗油污性	Heat resistance (in °C)	
SI: Translucent Silicone	50	+++	-	-	-	-40 to 220	Translucent
STN: Siton®	60	+	++	-	++	0 to 160	Blue

Vacuum Cups VSH Series

VSH-S2...VSH-S10

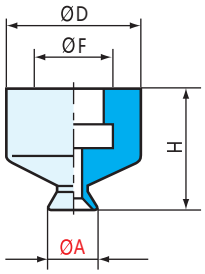

VSH-S12...VSH-S30

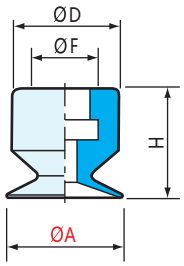

VSH-M4...VSH-M10

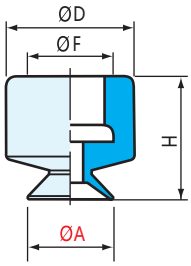

VSH-M12...VSH-M50

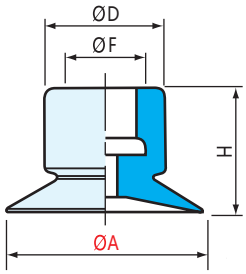

	(N)(1)	(N)(1)	ØA(mm)	H(mm)	ØD(mm)	ØF(mm)	SI
VSH-S2	0.5	0.1	2	13	11	7	1.Y07282
VSH-S4	0.7	0.2	4	15	11	7	1.Y07283
VSH-S6	0.9	0.3	6	11	11	7	1.Y07284
VSH-S8	1.1	0.5	8	11	11	7	1.Y07285
VSH-S10	1.6	0.8	10	11	11	7	1.Y07286
VSH-S12	2.0	1.5	12	11	11	7	1.Y07287
VSH-S15	3.7	1.8	15	13	11	7	1.Y07288
VSH-S20	6.1	3.0	20	13	12	7	1.Y07289
VSH-S25	9.4	4.7	25	13	11	7	1.Y07290
VSH-S30	15.9	7.9	30	12	13	7	1.Y07291
VSH-M4	0.7	0.2	4	14	15	11	1.Y07292
VSH-M6	0.9	0.3	6	15	15	11	1.Y07293
VSH-M8	1.1	0.5	8	15	15	11	1.Y07294
VSH-M10	1.6	0.8	10	15	15	11	1.Y07295
VSH-M12	2.0	1.5	12	15	15	11	1.Y07296
VSH-M15	3.7	1.8	15	15.5	16	11	1.Y07297
VSH-M20	6.1	3.0	20	15.5	16	11	1.Y07298
VSH-M25	9.4	4.7	25	15	15	11	1.Y07299
VSH-M30	15.9	7.9	30	15	16	11	1.Y07300
VSH-M40	26.7	13.4	40	16	17	11	1.Y07301
VSH-M50	38.3	19.1	50	15	20	11	1.Y07302

(1) Actual force of the suction cup in use with 65% vacuum and including a safety factor of 2 for horizontal handling and a factor of 4 for vertical handling.

Types of assembly

Factory-crimped fitting:

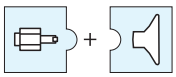

Hollow shaft fitting:

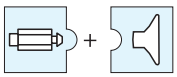

Removable fitting:
(adapter and hollow screw)

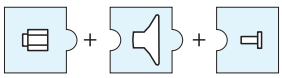

Vacuum Cup Fitting	Vacuum Cups
VM11-M5 VFS (VFS Series Stem) VFST (VFST Series Stem)	VSH-S2~VSH-S30
VM10-G 1/8 VM27-M5 VFM (VFM Series Stem) VFMT (VFMT Series Stem)	VSH-M4~VSH-M50

Materials	Shore Hardness	A Flexibility	Abrasion resistance	UV & weather resistance	Oil resistance	Heat resistance (in °C)	
SI: Translucent Silicone	50	+++	-	-	-	-40 to 220	Translucent

Vacuum Cups VSH2 Series

VSH2-S4...VSH2-S20

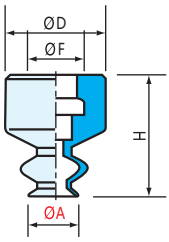

VSH2-S25...VSH2-S30

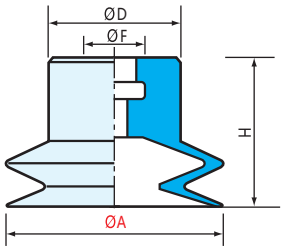

VSH2-M6...VSH2-M25

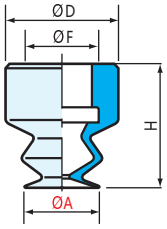

VSH2-M30...VSH2-M50

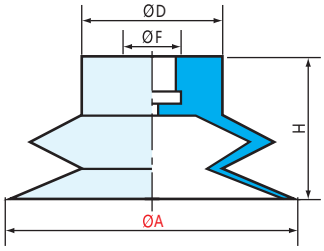

	(N)(1)	(N)(1)	ØA(mm)	H(mm)	ØD(mm)	ØF(mm)	SI
VSH2-S4	0.3	0.1	4	15	12	7	1.Y07303
VSH2-S6	0.5	0.2	6	15	12	7	1.Y07304
VSH2-S8	1.2	0.7	8	15	12	7	1.Y07305
VSH2-S10	1.7	0.9	10	15	12	7	1.Y07306
VSH2-S12	2.5	1.3	12	15	12	7	1.Y07307
VSH2-S15	2.7	1.3	15	18	15	7	1.Y07308
VSH2-S20	5.6	2.8	20	18	15	7	1.Y07309
VSH2-S25	7.9	4.0	25	17.5	15	7	1.Y07310
VSH2-S30	12	6	30	17.5	15	7	1.Y07311
VSH2-M6	0.5	0.2	6	18	15	11	1.Y07312
VSH2-M8	1.2	0.7	8	17	15	11	1.Y07313
VSH2-M10	1.7	0.9	10	17	15	11	1.Y07314
VSH2-M12	2.5	1.3	12	17	15	11	1.Y07315
VSH2-M15	2.7	1.3	15	18	15	11	1.Y07316
VSH2-M20	5.6	2.8	20	18	15	11	1.Y07317
VSH2-M25	7.9	4.0	25	18	15	11	1.Y07318
VSH2-M30	12	6	30	19	18	11	1.Y07319
VSH2-M35	13.9	6.9	35	19	18	11	1.Y07320
VSH2-M40	20.2	10.1	40	22	23	11	1.Y07321
VSH2-M50	40	20	50	24	24	11	1.Y07322

(1) Actual force of the suction cup in use with 65% vacuum and including a safety factor of 2 for horizontal handling and a factor of 4 for vertical handling.

Types of assembly

Factory-crimped fitting:

Hollow shaft fitting:

Removable fitting:
(adapter and hollow screw)

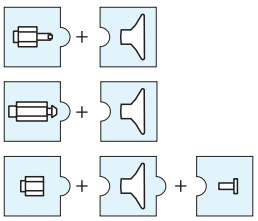

Vacuum Cup Fitting	Vacuum Cups
VM11-M5 VFS (VFS Series Stem) VFST (VFST Series Stem)	VSH2-S4~VSH2-S30
VM10-G 1/8 VM27-M5 VFM (VFM Series Stem) VFMT (VFMT Series Stem)	VSH2-M6~VSH2-M50

Materials	Shore Hardness	A Flexibility	Abrasion resistance	UV & weather resistance	Oil resistance	Heat resistance (in °C)	
SI: Translucent Silicone	50	+++	-	-	-	-40 to 220	Translucent

Vacuum Cups VSH3 Series

VSH3-S6...VSH3-S8

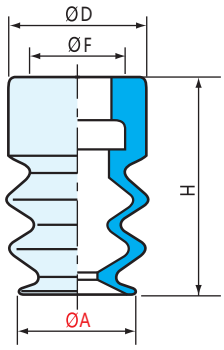

VSH3-S10...VSH3-S15

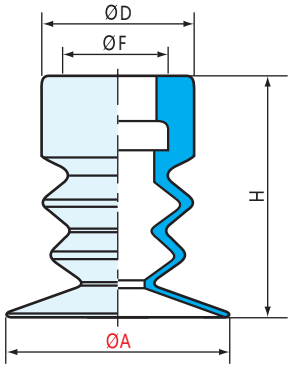

VSH3-M8...VSH3-M30

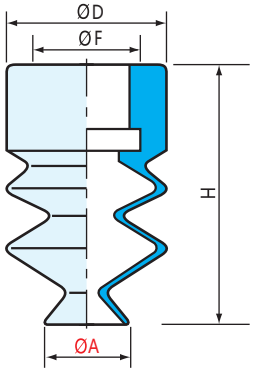

VSH3-M40...VSH3-M50

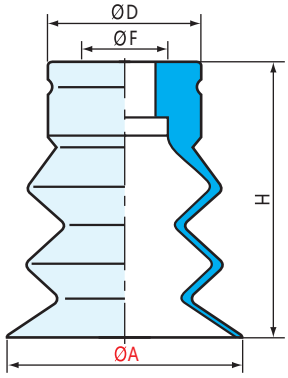

	(N)(1)	ØA(mm)	H(mm)	ØD(mm)	ØF(mm)	SI
VSH3-S6	0.5	6	15	10	7	1.Y07323
VSH3-S8	1.0	8	15	10	7	1.Y07324
VSH3-S10	1.5	10	15	10	7	1.Y07325
VSH3-S12	2.8	12	15	10	7	1.Y07326
VSH3-S15	3.0	15	16	10	7	1.Y07327
VSH3-M8	1.0	8	20	15	11	1.Y07328
VSH3-M10	1.5	10	24	15	11	1.Y07329
VSH3-M12	2.8	12	24	15	11	1.Y07330
VSH3-M15	3.0	15	24	15	11	1.Y07331
VSH3-M20	4.6	20	25	15	11	1.Y07332
VSH3-M25	6.5	25	29	17	11	1.Y07333
VSH3-M30	12.1	30	35	17	11	1.Y07334
VSH3-M40	20.5	40	45	20	11	1.Y07335
VSH3-M50	25	50	43	20	11	1.Y07336

(1) Actual force of the suction cup in use with 65% vacuum and including a safety factor of 2 for horizontal handling and a factor of 4 for vertical handling.

Types of assembly

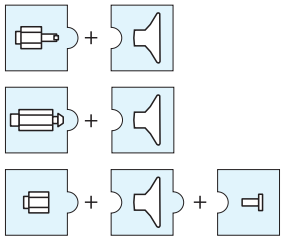

Factory-crimped fitting:
Hollow shaft fitting:

Removable fitting:
(adapter and hollow screw)

Vacuum Cup Fitting	Vacuum Cups
VM11-M5 VFS (VFS Series Stem) VFST (VFST Series Stem)	VSH3-S6~VSH3-S15
VM10-G 1/8 VM27-M5 VFM (VFM Series Stem) VFMT (VFMT Series Stem)	VSH3-M8~VSH3-M50

Materials	Shore Hardness	A Flexibility	Abrasion resistance	UV & weather resistance	Oil resistance	Heat resistance (in °C)	
SI: Translucent Silicone	50	+++	-	-	-	-40 to 220	Translucent

Vacuum Cups VFC Series

Functions: anti-skid, oil-proof and water-proof (mostly used for adsorption of automobile sheet metal, glass, etc.)

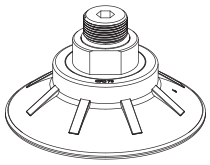

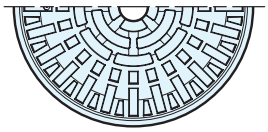

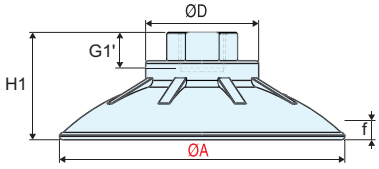

F38G Female fitting G3/8"

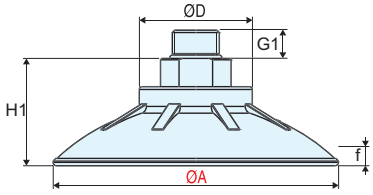

M38G Male fitting G3/8"

	ØA at rest	ØA gripping	(cm³)	(N)(1)	(N)(1)	Rmin	Rmin	Ø bore	H1	f(3)
VFC 35	37	38.5	2.46	50	50	58	50	6.3	25	3
VFC 50	51	54	8.37	100	100	66	52	6.3	30	5.5
VFC 75	76	80	25.03	200	170	100	58	6.3	33	8
VFC 100	101	105.7	57.61	350	270	120	90	6.3	38	10
VFC 125	127	132	119.7	550	480	160	115	6.3	44	14

	G1	G1'	ØD(mm)	(g) F38G	(g) M38G	PN F38G	PN M38G
VFC 35	10	12.6	37	14	18	1.Y08448	1.Y08477
VFC 50	10	12.6	38	25	29	1.Y08449	1.Y08478
VFC 75	10	12.6	41	40	45	1.Y08450	1.Y08503
VFC 100	10	12.6	41	67	72	1.Y08451	1.Y08479
VFC 125	10	12.6	55	119	124	1.Y08452	1.Y08480

Vacuum Cups VOFC Series

Functions: anti-skid, oil-proof and water-proof (mostly used for adsorption of automobile sheet metal, glass, etc.)

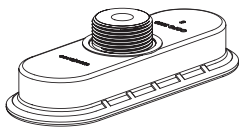

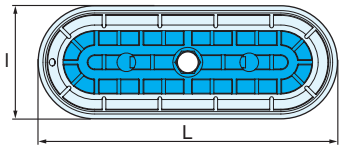

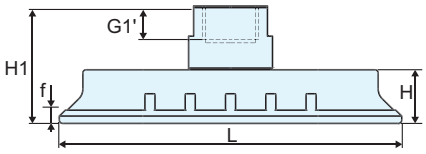

F38G Female fitting G3/8"

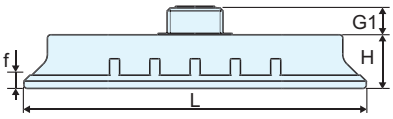

M38G Male fitting G3/8"

	l x L at rest	l x L gripping	(cm³)	(N)(1)	(N)(1)	Rmin	Rmin	Ø bore	H1	H
VOFC 2565	25x65	26.8x67	3.78	70	70	25	25	6	31.5	12.5
VOFC 3080	30x80	31.5x82	6.08	110	90	40	32	6	32	13
VOFC 4080	40x80	42x82	11.03	140	120	60	40	6	34	15
VOFC 50100	50x100	52.5x102.5	22.25	230	240	70	50	6	35	16

	G1	G1'	f(2)	(g) F38G	(g) M38G	PN F38G	PN M38G
VOFC 2565	8	10	3	24	17	1.Y08453	1.Y08481
VOFC 3080	8	10	3	29	22	1.Y08454	1.Y08482
VOFC 4080	8	10	4.5	30	23	1.Y08455	1.Y08483
VOFC 50100	8	10	6	43	36	1.Y08484	1.Y08485

Vacuum Cups VBC Series

Functions: anti-skid, oil-proof and water-proof (mostly used for adsorption of automobile sheet metal, glass, etc.)

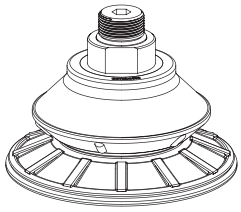

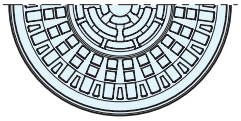

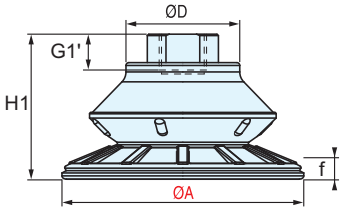

F38G Female fitting G3/8"

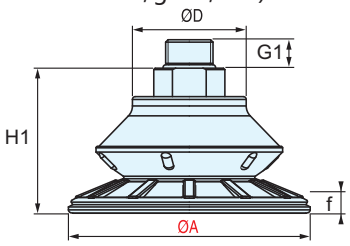

M38G Male fitting G3/8"

	ØA at rest	ØA gripping	(cm³)	(N)(1)	(N)(1)	Rmin	Rmin	Ø bore	H1	f(3)
VBC 22	21.5	22	1.6	17	17	25	30	6.3	32	6
VBC 30(2)	32	34	5	40	40	30	32	6.3	31	8
VBC 45	47	48.7	11.47	70	90	36	45	6.3	36	11
VBC 60	62	64.5	25.31	140	130	44	62	6.3	41	14
VBC 85	85	88	66.54	230	240	65	115	6.3	51	22
VBC 115	115	119	141.47	420	390	84	140	6.3	53	24

	G1	G1'	ØD(mm)	(g) F38G	(g) M38G	PN F38G	PN M38G
VBC 22	10	12.6	37	10	14	1.Y08456	1.Y08486
VBC 30(2)	10	12.6	37	14	19	1.Y08457	1.Y08487
VBC 45	10	12.6	37	22	26	1.Y08458	1.Y08488
VBC 60	10	12.6	39	32	37	1.Y08459	1.Y08489
VBC 85	10	12.6	41	64	69	1.Y08460	1.Y08490
VBC 115	10	12.6	55	103	107	1.Y08461	1.Y08491

Vacuum Cups VOBC Series

Functions: anti-skid, oil-proof and water-proof (mostly used for adsorption of automobile sheet metal, glass, etc.)

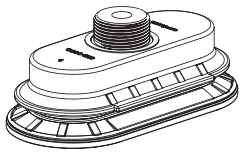

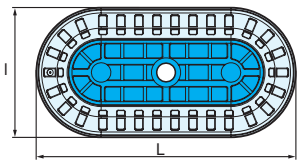

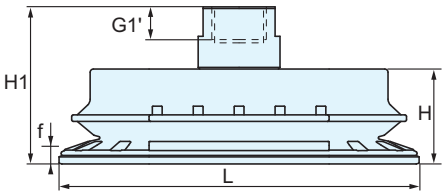

F38G Female fitting G3/8"

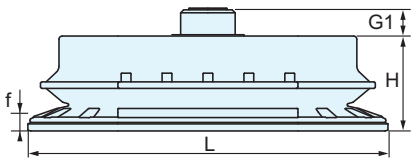

M38G Male fitting G3/8"

	I x L at rest	I x L gripping	(cm³)	(N)(1)	(N)(1)	Rmin	Rmin	Ø bore	H1	H
VOBC 3065	31x65	32.3x67	9.98	60	60	25	30	6	39	20
VOBC 4080	40x80	41.5x82	19.44	110	120	38	37	6	41	22
VOBC 55110	55x110	57x112.5	49.25	170	190	58	57	6	48	29
VOBC 70140	70x140	72x143	93.57	300	300	72	68	6	49	30

	G1	G1'	f(2)	(g) F38G	(g) M38G	PN F38G	PN M38G
VOBC 3065	8	10	7	31	25	1.Y08462	1.Y08492
VOBC 4080	8	10	9	37	31	1.Y08463	1.Y08493
VOBC 55110	8	10	13	68	62	1.Y08464	1.Y08494
VOBC 70140	8	10	16	103	97	1.Y08465	1.Y08495

Vacuum Cup Fitting

Model representation methods

VM 01 - G14

Series

NO.

Thread dimension M5 M8 G1/8 G1/4

Vacuum Cup Fitting			
Dimension	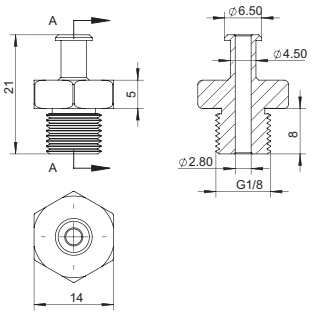	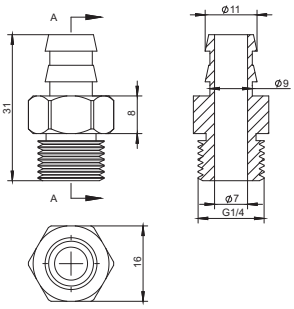	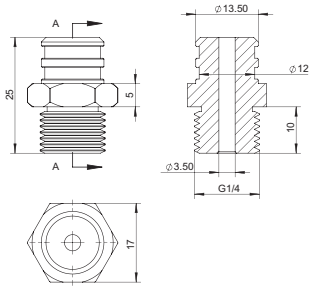
PN	7.Y00703	7.Y00709	7.Y00768
Model	VM02-G18	VM04-G14	VM06-G14
Weight	3.5g	7.0g	9.7g

Vacuum Cup Fitting			
Dimension	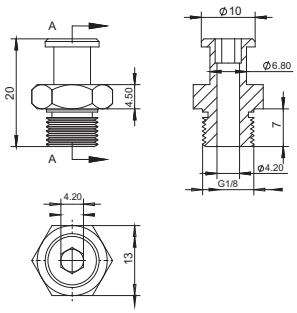	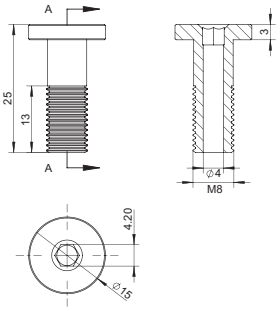	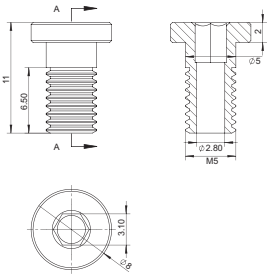
PN	7.Y00767	1.Y05275	1.Y05274
Model	VM07-G18	VM08-M8	VM09-M5
Weight	3.3g	8.3g	1.4g

Vacuum Cup Fitting

Vacuum Cup Fitting			
Dimension	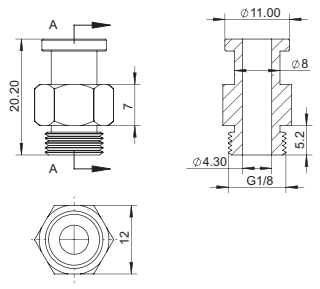	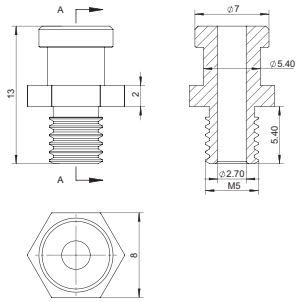	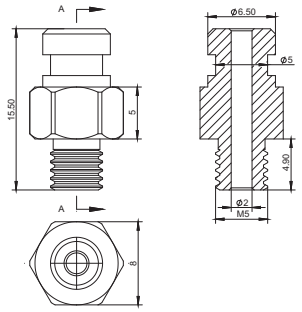
PN	7.Y00902	1.Y05327	7.Y00762
Model	VM10-G18	VM11-M5	VM12-M5
Weight	3.7g	2.0g	1.2g

Vacuum Cup Fitting			
Dimension	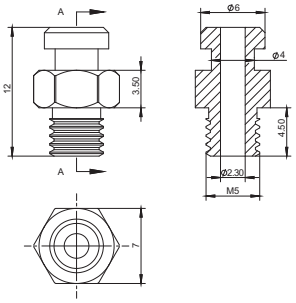	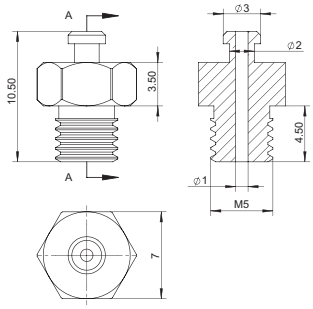	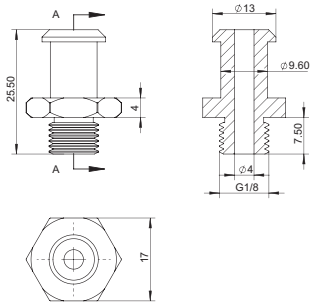
PN	7.Y00761	7.Y00760	7.Y00759
Model	VM13-M5	VM14-M5	VM15-G18
Weight	0.7g	0.5g	17.8g

Vacuum Cup Fitting

Vacuum Cup Fitting			
Dimension	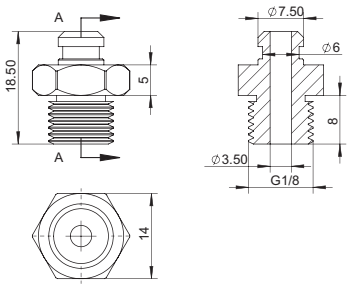	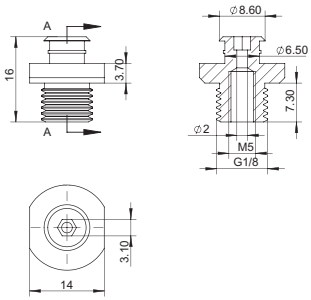	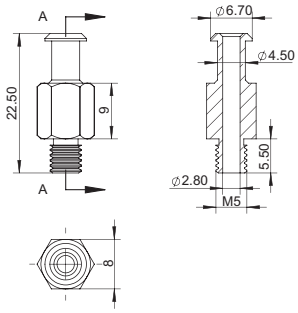
PN	7.Y00758	7.Y00757	1.Y05314
Model	VM16-G18	VM17-G18	VM18-M5
Weight	3.8g	2.9g	4.6g

Vacuum Cup Fitting			
Dimension	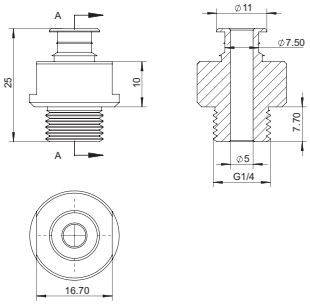	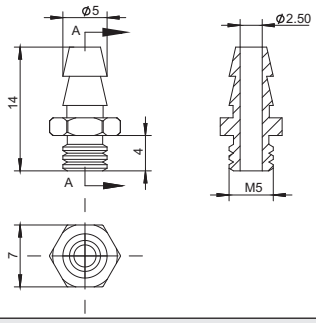	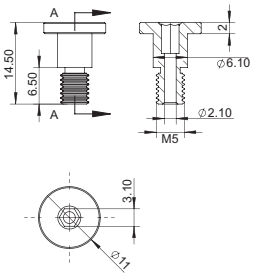
PN	4.Y00058	1.Y01986	1.Y05790
Model	VM20-G14	VM21-M5	VM22-M5
Weight	9.5g	1.8g	2.9g

Vacuum Cup Fitting

Vacuum Cup Fitting			
Dimension	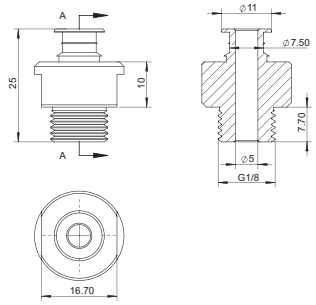	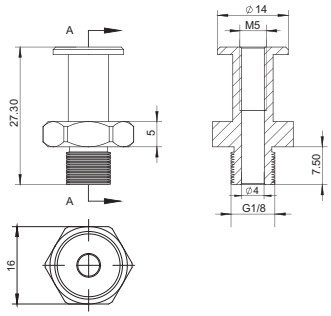	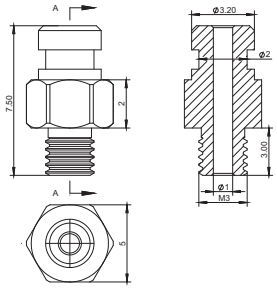
PN	7.Y00900	7.Y00898	7.Y00928
Model	VM23-G18	VM24-G18	VM25-M3
Weight	8.9g	5.5g	0.2g

Vacuum Cup Fitting			
Dimension	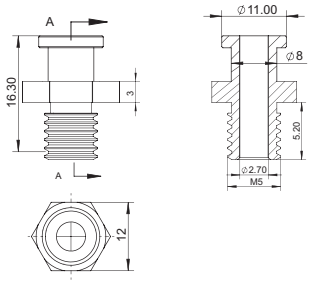	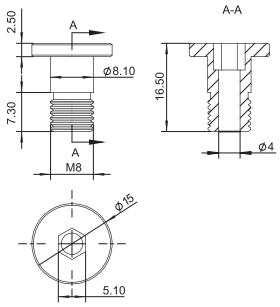	
PN	1.Y01097	7.Y00475	
Model	VM27-M5	VM28-M8	
Weight	6.2g	1.9g	

Vacuum Cup Connector

Model representation methods

VM - G18 M - M8 F

- VM: Series
- G18: Thread dimension G1/8 G1/4
- M: F-Female M-Male
- M8: Thread dimension M5 M8 M10
- F: F-Female M-Male

Vacuum Cup Connector			
Dimension	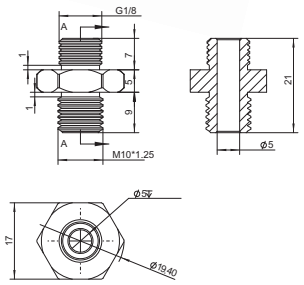	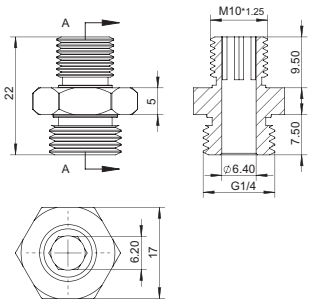	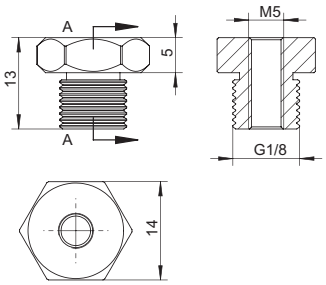
PN	7.Y00808	7.Y00756	7.Y00755
Model	VM-G18M-M10M	VM-G14M-M10M	VM-G18M-M5F
Weight	4.5g	4.7g	2.9g

Vacuum Cup Connector			
Dimension	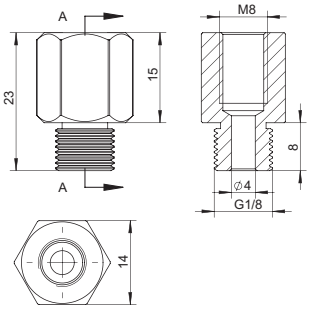	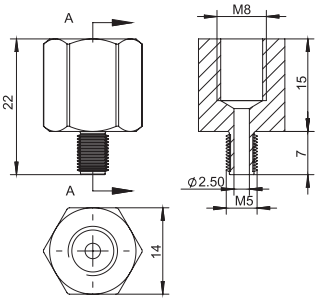	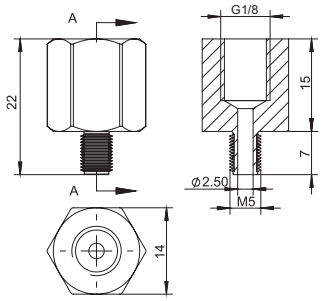
PN	7.Y00754	7.Y00473	7.Y00474
Model	VM-G18M-M8F	VM-M5M-M8F	VM-M5M-G18F
Weight	6.2g	5.6g	4.9g

Vacuum Cup Connector

Model representation methods

VM - G18 M - M8 F

- Series: VM
- Thread dimension G1/8 G1/4: G18
- F-Female, M-Male: M
- Thread dimension M5 M8 M10: M8
- F - Female, M - Male: F

Vacuum Cup Connector			
Dimension	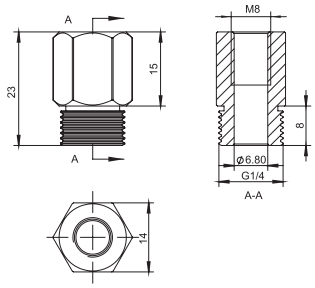		
PN	7.Y00476		
Model	VM-G14M-M8F		
Weight	6.7g		

Vacuum Cup Suspensions

Model representation methods

VFE [T] [1011] - [M5]

- VFE — Series
- T — Non - Cylindrical type; T - T Thread type
- 1011 — Installation diameter+stroke
- M5 — Vacuum Cup Fitting hole for fastening M5 G1/8

VFE

VFR

VFN

VFET

VFRT

VFNT

The suspensions (or buffers, or level compensators) are used to keep the suction cups in position as the robot approaches.
CRG offers a range specifically designed for Plastics applications.
They are typically mounted on EAOTs (End Of Arm Toolings)with Mounting brackets.

Suspensions with smooth body

VFR
VFN
VFE

Suspensions with threaded body

VFRT
VFNT
VFET

Non-rotative suspensions

VFN
VFNT
VFE
VFET

Rotative suspensions

VFR
VFRT

Non-rotative Suspensions

Body and rod in anodized aluminum.
Non-rotative rod with high load capability.
Pressure range: -1 ~ 8 bar.

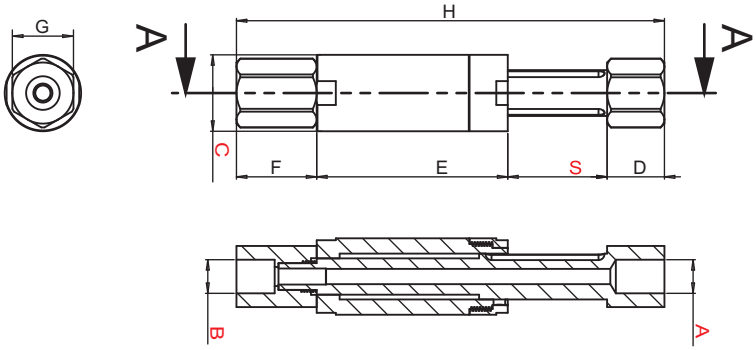

PN	Model	A(mm)	B(mm)	C(mm)	D(mm)	E(mm)	F(mm)	G(mm)	H(mm)	S(mm)	Weight(g)
8.Y00064	VFN1011-M5	M5	M5	Ø10	10	22	17	8	60	11	7g
8.Y00321	VFN1021-M5	M5	M5	Ø10	10	41	17	8	89	21	11g
8.Y00065	VFN1421-G18	G1/8	G1/8	Ø14	12	40	20	12	93	21	24g
8.Y00322	VFN1436-G18	G1/8	G1/8	Ø14	12	60	20	12	128	36	44g
8.Y00066	VFN2026-G18	G1/8	G1/8	Ø20	15	50	21	16	112	26	54g
8.Y00067	VFN2051-G18	G1/8	G1/8	Ø20	15	84	21	16	171	51	80g

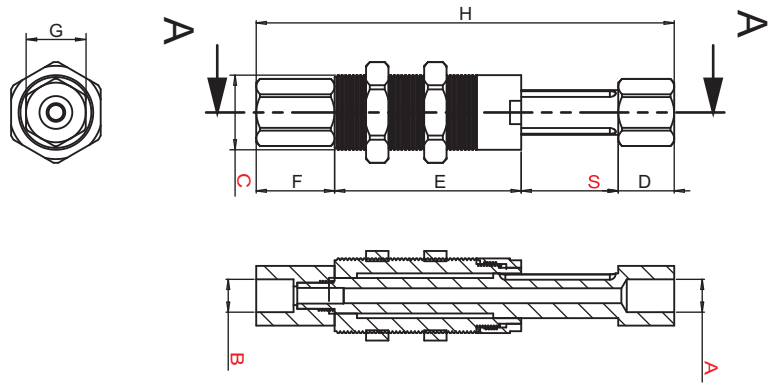

PN	Model	A(mm)	B(mm)	C(mm)	D(mm)	E(mm)	F(mm)	G(mm)	H(mm)	S(mm)	Weight(g)
8.Y00068	VFNT1011-M5	M5	M5	M10*1	10	22	17	8	60	11	12g
8.Y00323	VFNT1021-M5	M5	M5	M10*1	10	41	17	8	89	21	39g
8.Y00204	VFNT1421-G18	G1/8	G1/8	M14*1	12	40	20	12	93	21	51g
8.Y00383	VFNT1621-G18	G1/8	G1/8	M16*1	12	40	20	12	93	21	64g
8.Y00324	VFNT1436-G18	G1/8	G1/8	M14*1	12	60	20	12	128	36	72g
8.Y00384	VFNT1636-G18	G1/8	G1/8	M16*1	12	60	20	12	128	36	76g
8.Y00205	VFNT2026-G18	G1/8	G1/8	M20*1	15	50	21	16	112	26	82g
8.Y00206	VFNT2051-G18	G1/8	G1/8	M20*1	15	84	21	16	171	51	120g

Rotative Suspensions

Body and rod in anodized aluminum.
Rotative rod.
Pressure range: -1 ~8 bar.

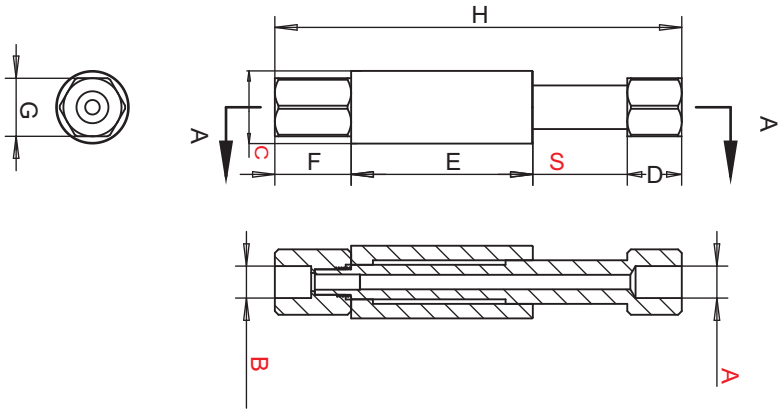

PN	Model	A(mm)	B(mm)	C(mm)	D(mm)	E(mm)	F(mm)	G(mm)	H(mm)	S(mm)	Weight(g)
8.Y00060	VFR1011-M5	M5	M5	Ø10	3	22	17	8	53	11	11g
8.Y00325	VFR1021-M5	M5	M5	Ø10	3	41	17	8	82	21	17g
8.Y00061	VFR1421-G18	G1/8	G1/8	Ø14	12	40	20	12	93	21	23g
8.Y00326	VFR1436-G18	G1/8	G1/8	Ø14	12	60	20	12	128	36	40g
8.Y00062	VFR2026-G18	G1/8	G1/8	Ø20	15	50	21	16	112	26	50g
8.Y00063	VFR2051-G18	G1/8	G1/8	Ø20	15	84	21	16	171	51	77g

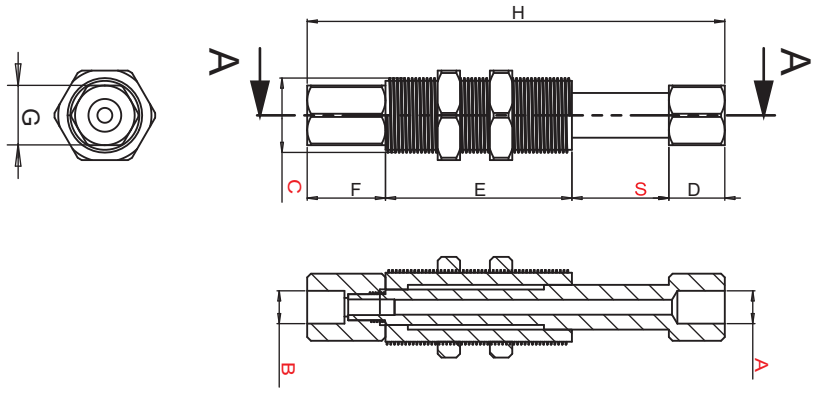

PN	Model	A(mm)	B(mm)	C(mm)	D(mm)	E(mm)	F(mm)	G(mm)	H(mm)	S(mm)	Weight(g)
8.Y00074	VFRT1011-M5	M5	M5	M10*1	3	22	17	8	53	11	14g
8.Y00327	VFRT1021-M5	M5	M5	M10*1	3	41	17	8	82	21	26g
8.Y00075	VFRT1421-G18	G1/8	G1/8	M14*1	12	40	20	12	93	21	32g
8.Y00381	VFRT1621-G18	G1/8	G1/8	M16*1	12	40	20	12	93	21	36g
8.Y00328	VFRT1436-G18	G1/8	G1/8	M14*1	12	60	20	12	128	36	60g
8.Y00382	VFRT1636-G18	G1/8	G1/8	M16*1	12	60	20	12	128	36	65g
8.Y00076	VFRT2026-G18	G1/8	G1/8	M20*1	15	50	21	16	112	26	70g
8.Y00077	VFRT2051-G18	G1/8	G1/8	M20*1	15	84	21	16	171	51	104g

Non-rotative Suspensions With Integral Elbow Arms

It is possible to set continuously the angle between 0° and +/-90°.
External air feeding.
Body and rod in anodized aluminum.
Non-rotative rod with high load capability.
Pressure range: -1 ~ 8 bar.

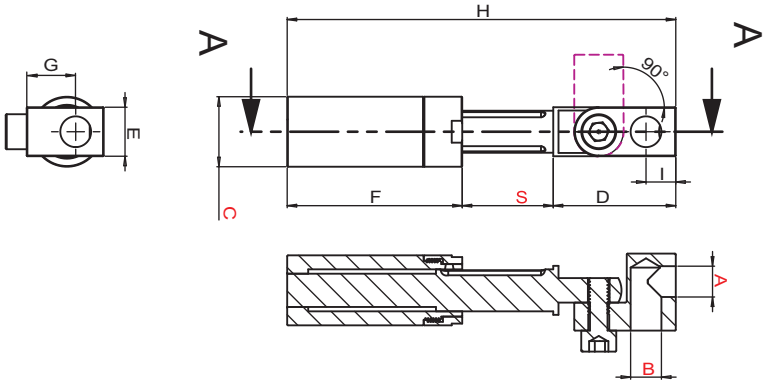

PN	Model	A(mm)	B(mm)	C(mm)	D(mm)	E(mm)	F(mm)	G(mm)	H(mm)	S(mm)	Weight(g)
8.Y00070	VFE1011-M5	M5	M5	Ø10	20	8	22	8	53	11	12g
8.Y00371	VFE1021-M5	M5	M5	Ø10	20	8	41	8	81	21	16g
8.Y00071	VFE1421-G18	G1/8	G1/8	Ø14	32	14	40	14	93	21	45g
8.Y00372	VFE1436-G18	G1/8	G1/8	Ø14	32	14	60	14	128	36	48g
8.Y00072	VFE2026-G18	G1/8	G1/8	Ø20	35	14	50	14	111	26	70g
8.Y00073	VFE2051-G18	G1/8	G1/8	Ø20	35	14	84	14	169.5	51	105g

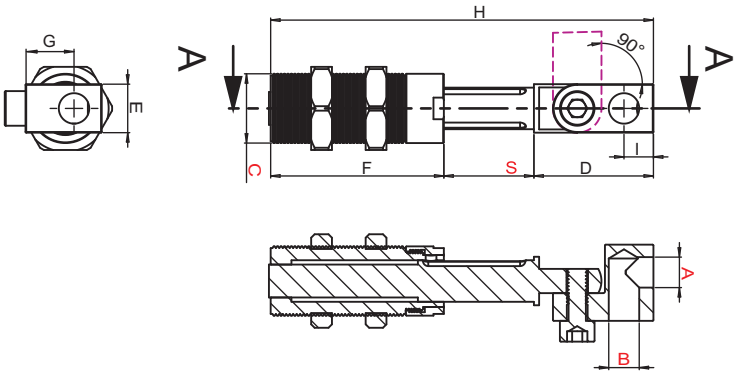

PN	Model	A(mm)	B(mm)	C(mm)	D(mm)	E(mm)	F(mm)	G(mm)	H(mm)	S(mm)	Weight(g)
8.Y00069	VFET1011-M5	M5	M5	M10*1	20	8	22	8	53	11	15g
8.Y00374	VFET1021-M5	M5	M5	M10*1	20	8	41	8	81	21	24g
8.Y00228	VFET1421-G18	G1/8	G1/8	M14*1	32	14	40	14	93	21	57g
8.Y00379	VFET1621-G18	G1/8	G1/8	M16*1	32	14	40	14	93	21	64g
8.Y00375	VFET1436-G18	G1/8	G1/8	M14*1	32	14	60	14	128	36	80g
8.Y00380	VFET1636-G18	G1/8	G1/8	M16*1	32	14	60	14	128	36	85g
8.Y00229	VFET2026-G18	G1/8	G1/8	M20*1	35	14	50	14	111	26	88g
8.Y00230	VFET2051-G18	G1/8	G1/8	M20*1	35	14	84	14	169.5	51	125g

Non-rotating suspension for fixed piping

The product is made of anodic aluminium.
Built-in anti-rotation plastic piston.
Built-in telescopic function of spring reset,
tail vacuum intake fixed design.

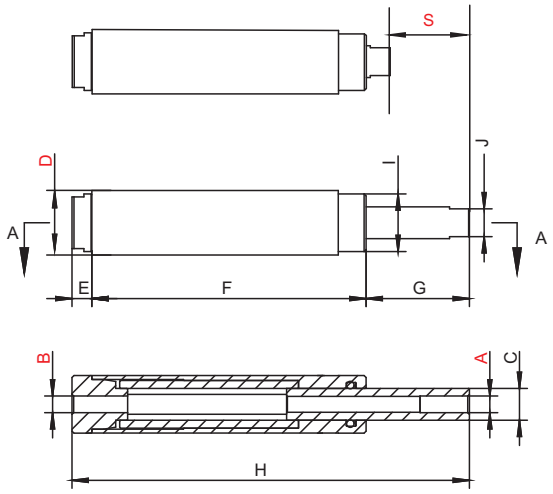

PN	Model	A	B	C	D	E	F	G	H	I	J	S	Weight(g)
8.Y00313	VFC2030-G18	G1/8	G1/8	Φ13	Φ20	8	85	40	133	Φ18	12	30	60

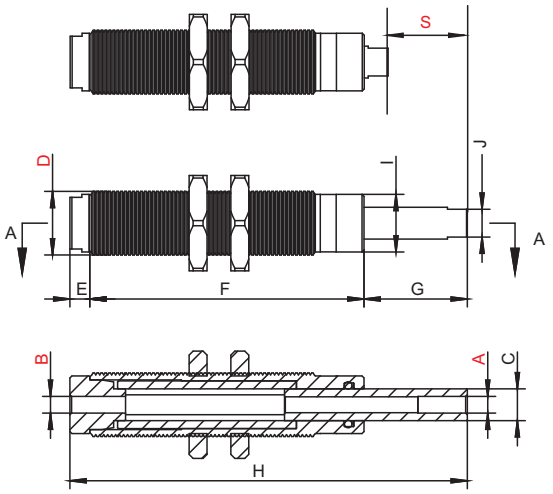

PN	Model	A	B	C	D	E	F	G	H	I	J	S	Weight(g)
8.Y00277	VFCT1620-M5	M5	M5	Φ8	M16X1.0	5	69	26	100	Φ14.5	7	20	42.7
8.Y00314	VFCT2030-G18	G1/8	G1/8	Φ13	M20X1.0	8	85	40	133	Φ18	12	30	80

The Adsorption Of Pneumatic Fittings

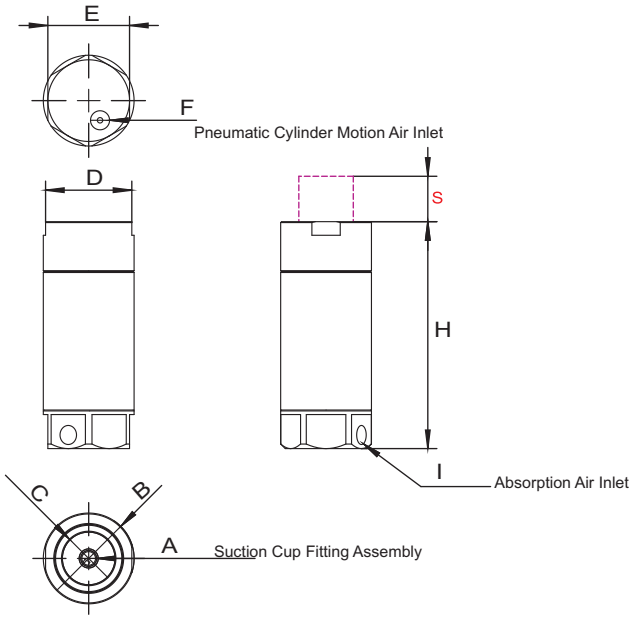

PN	Model	A(mm)	B(mm)	C(mm)	D(mm)	E(mm)	F(mm)	H(mm)	I(mm)	S(mm)	Weight(g)
8.Y00207	VFG20-10	M5	Φ20	Φ12	19	18	M5	50	M5	10	35g
8.Y00337	VFG20-20	M5	Φ20	Φ12	19	18	M5	65	M5	20	45g
8.Y00338	VFG30-20	G1/8	Φ30	Φ20	27	27	G1/8	72	G1/8	20	70g

Suction Stems

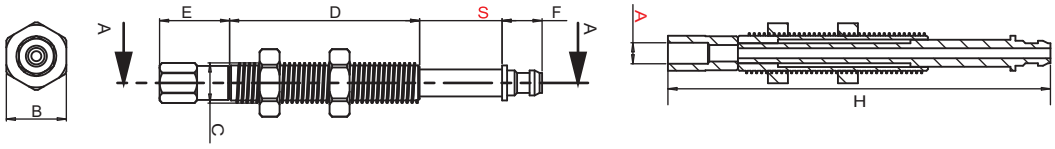

PN	Model	A(mm)	B(mm)	C(mm)	D(mm)	E(mm)	F(mm)	H(mm)	S(mm)	Weight(g)
1.Y05764	VFRT-7M5	M5	12	M8*1	21.5	14	8	51	7	15g
1.Y05765	VFRT-15M5	M5	12	M8*1	38	14	8	80	20	21g
1.Y05766	VFRT-30M5	M5	12	M8*1	38	14	8	90	30	22g

Vacuum Cups VFRT Series

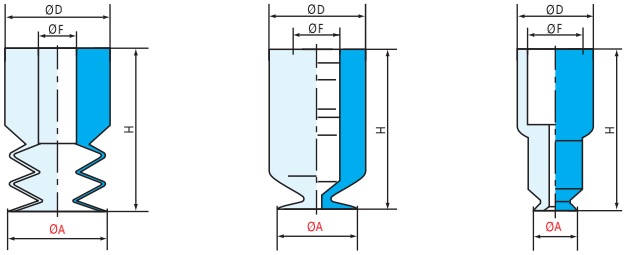

	ØA(mm)	H(mm)	ØD(mm)	ØF(mm)	SI(透明)
VSR-S2	2	12	7	5	1.Y00435
VSR-S4	4	14	7	5	1.Y00436
VSR-S6	6	12	7	5	1.Y03350
VSR-S8	8	12	7	5	1.Y00442
VSR3-S5	5	14	7	4	1.Y04179
VSR3-S7	7	14	7	4	1.Y04444

Suction Stems

Model representation methods

VFRS - 20 M10 - M5

Series — VFRS

Stroke — 20

Installation size — M10 M17

Vacuum Cup Fitting hole for fastening — M5 G1/8

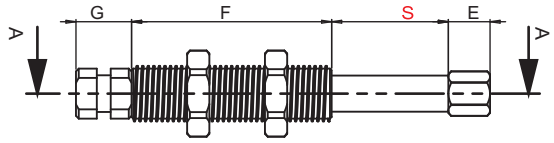

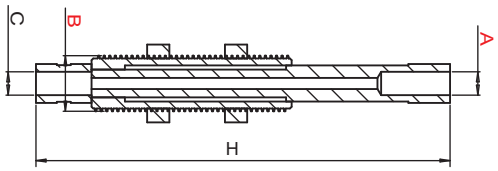

PN	Model	A(mm)	B(mm)	C(mm)	D(mm)	E(mm)	F(mm)	G(mm)	H(mm)	S(mm)	Weight(g)
4.Y00026	VFRS-20M10-M5	M5	M10*1	M5	14	7	36	10	73.5	20	27g
4.Y00023	VFRS-20M16-G18	G1/8	M16*1	G1/8	21	4	36	15	77	20	76g

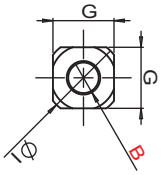

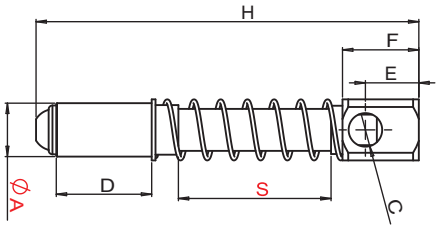

PN	Model	A(mm)	B(mm)	C(mm)	D(mm)	E(mm)	F(mm)	G(mm)	H(mm)	I(mm)	S(mm)	Weight(g)
1.Y01452	VFM-4014-G18	Ø14	G1/8	G1/8	25	14	20	16	100	Ø20	40	48g
1.Y01451	VFM-2020-G14	Ø20	G1/4	G1/8	48	15	26	22	113	Ø27	20	136g

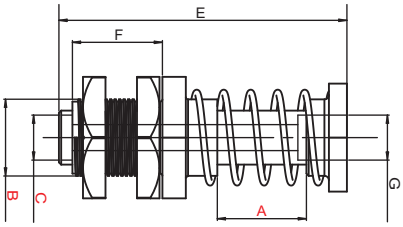

PN	Model	A(mm)	B(mm)	C(mm)	D(mm)	E(mm)	F(mm)	G(mm)	Weight(g)
1.Y01453	VFL-20M17-G18	20	M17*1	G1/8	27	64	20	G1/8	119g

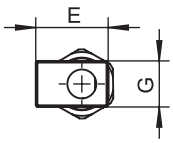

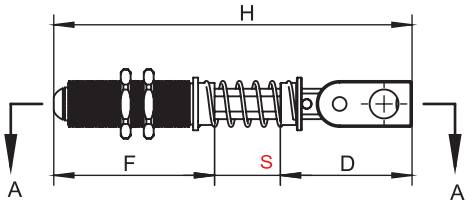

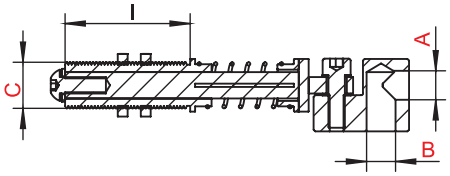

PN	Model	A(mm)	B(mm)	C(mm)	D(mm)	E(mm)	F(mm)	G(mm)	H(mm)	I(mm)	S(mm)	Weight(g)
8.Y00319	VFMT-20M14-G18	G1/8	G1/8	M14X1.0	40	22	49	14	109	38	20	97g
8.Y00320	VFMT-40M14-G18	G1/8	G1/8	M14X1.0	40	22	64	14	144	50	40	123g

Suction Stems

Model representation methods

VFS [T] - [30] [M10]

- VFS — Series
- T — Non - Cylindrical type; T - Thread type
- 30 — Stroke
- M10 — M Thread type

VFST

VFS

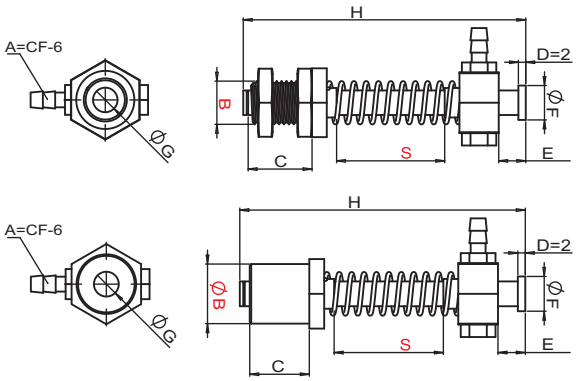

PN	Model	B(mm)	C(mm)	E(mm)	F(mm)	G(mm)	H(mm)	S(mm)	Weight(g)
1.Y04942	VFST-5M10	M10*1	18	5.5	Ø7	Ø3.4	40.5	5	14g
1.Y00533	VFST-10M10	M10*1	18	5.5	Ø7	Ø3.4	45.5	10	15g
1.Y00531	VFST-20M10	M10*1	18	5.5	Ø7	Ø3.4	55.5	20	15g
1.Y01566	VFST-30M10	M10*1	18	5.5	Ø7	Ø3.4	65.5	30	16g
1.Y05260	VFS-0508	Ø8	18	5.5	Ø7	Ø3.4	40.5	5	9g
1.Y05756	VFS-0512	Ø12	18	5.5	Ø7	Ø3.4	40.5	5	13g
1.Y05261	VFS-1008	Ø8	18	5.5	Ø7	Ø3.4	45.5	10	9g
8.Y00007	VFS-1012	Ø12	18	5.5	Ø7	Ø3.4	45.5	10	14g
1.Y05262	VFS-2008	Ø8	18	5.5	Ø7	Ø3.4	55.5	20	10g
8.Y00008	VFS-2012	Ø12	18	5.5	Ø7	Ø3.4	55.5	20	14g
1.Y05757	VFS-3008	Ø8	18	5.5	Ø7	Ø3.4	65.5	30	11g
1.Y05758	VFS-3012	Ø12	18	5.5	Ø7	Ø3.4	65.5	30	15g
1.Y00527	VFMT-5M12	M12*1	18	9	Ø11	Ø4.6	44	5	20g
1.Y00522	VFMT-10M12	M12*1	18	9	Ø11	Ø4.6	49	10	21g
1.Y00523	VFMT-20M12	M12*1	18	9	Ø11	Ø4.6	59	20	22g
1.Y00521	VFMT-30M12	M12*1	18	9	Ø11	Ø4.6	69	30	24g
1.Y05759	VFM-0512	Ø12	18	9	Ø11	Ø4.6	44	5	15g
1.Y05760	VFM-0520	Ø20	18	9	Ø11	Ø4.6	44	5	29g
1.Y03068	VFM-1012	Ø12	18	9	Ø11	Ø4.6	49	10	16g
1.Y05761	VFM-1020	Ø20	18	9	Ø11	Ø4.6	49	10	29g
1.Y04279	VFM-2012	Ø12	18	9	Ø11	Ø4.6	59	20	18g
1.Y05762	VFM-2020	Ø20	18	9	Ø11	Ø4.6	59	20	31g
1.Y03069	VFM-3012	Ø12	18	9	Ø11	Ø4.6	69	30	19g
1.Y05763	VFM-3020	Ø20	18	9	Ø11	Ø4.6	69	30	32g

NEW

Single pipe valve VUVG-LK,24VDC, Inner leader H2 Junction box with0.5m cable

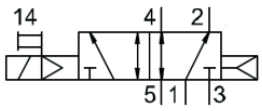

M52 Two-position five-way single electronic control air reset

accessory
seal a pack of ten

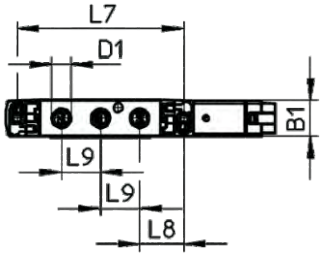

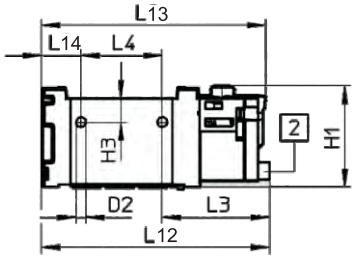

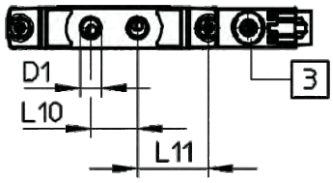

2 horizontal electrical inferface 3 manual button

PN	Model	B1	D2	H1	H3	L3	L4	L7	L8	L9	L10	L11	L12	L13	L14	(l/min)
1.Y06040	VUVG-LK14-M52-AT-G18-1H2L-S	14.4	3.3	34.8	3.2	40.1	37	66.5	18.4	14.9	17	24.8	95.6	94.4	17.7	660

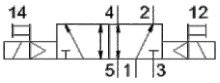

B52 Two-position double electronic controll

accessory
seal a pack of ten

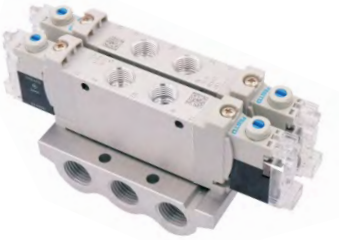

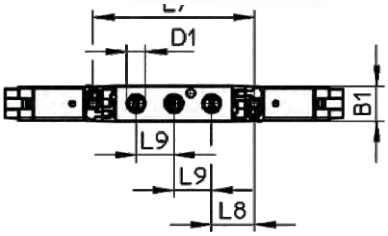

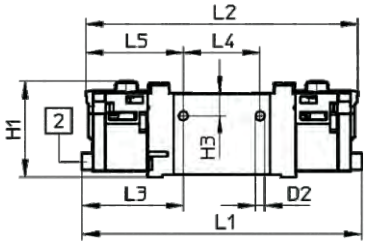

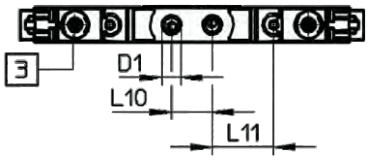

2 horizontal electrical inferface 3 manual button

PN	Model	B1	D2	H1	H3	L1	L2	L3	L4	L5	L7	L8	L9	L10	L11	(l/min)
1.Y06288	VUVG-LK14-B52-T-G18-1H2L-W1-S	14.4	3.3	34.8	3.2	118.9	116.4	40.1	37	39.7	66.5	18.4	14.9	17	24.8	660

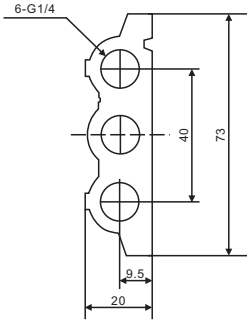

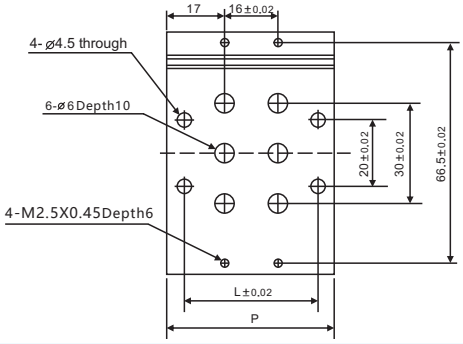

PN	1.Y06289	1.Y06290	1.Y06291	1.Y06292	1.Y06293	1.Y06294	1.Y06042	1.Y07453	1.Y06295
Model	VUVG1/8-LK-2F	VUVG1/8-LK-3F	VUVG1/8-LK-4F	VUVG1/8-LK-5F	VUVG1/8-LK-6F	VUVG1/8-LK-7F	VUVG1/8-LK-8F	VUVG1/8-LK-9F	VUVG1/8-LK-10F
Row	2	3	4	5	6	7	8	9	10
L	40	56	72	88	104	120	136	152	168
P	50	66	82	98	114	130	146	162	178

PN	1.Y09872	1.Y09873	1.Y09874	1.Y09875	1.Y09876	1.Y09877	1.Y09878	1.Y09879	1.Y09880	1.Y09881
Model	VUVG1/8-LK-11F	VUVG1/8-LK-12F	VUVG1/8-LK-13F	VUVG1/8-LK-14F	VUVG1/8-LK-15F	VUVG1/8-LK-16F	VUVG1/8-LK-17F	VUVG1/8-LK-18F	VUVG1/8-LK-19F	VUVG1/8-LK-20F
Row	11	12	13	14	15	16	17	18	19	20
L	184	200	216	232	248	264	280	296	312	328
P	194	210	226	242	258	274	290	306	322	338

Vacuum Module VPN-20 Series

Basic data

Item	Content
Body size [mm]	80×20×87
Working temperature [℃]	-5~50
Net weight [g]	228
Power consumption	24VDC,1.3W

PN	1.Y05963
Model	VPN-20

- The use of multistage vacuum generator has the characteristics of high vacuum and low consumption.
- Miniature solenoid valve is adopted to control vacuum establishment and vacuum removal.
- 20mm width design for multi vacuum combination, convenient warranty, smaller size.

Technical data

Item		High vacuum type		
Working gas pressure	[Mpa]	0.35	0.4	0.5
Maximum vacuum	[-kpa]	84	88	88
Maximum vacuum flow	[L/min]	39.6	40.2	40.2
Air consumption	[L/min]	28.4	31.8	34.2

Vacuum Module VPN-20 Series

Dimension description

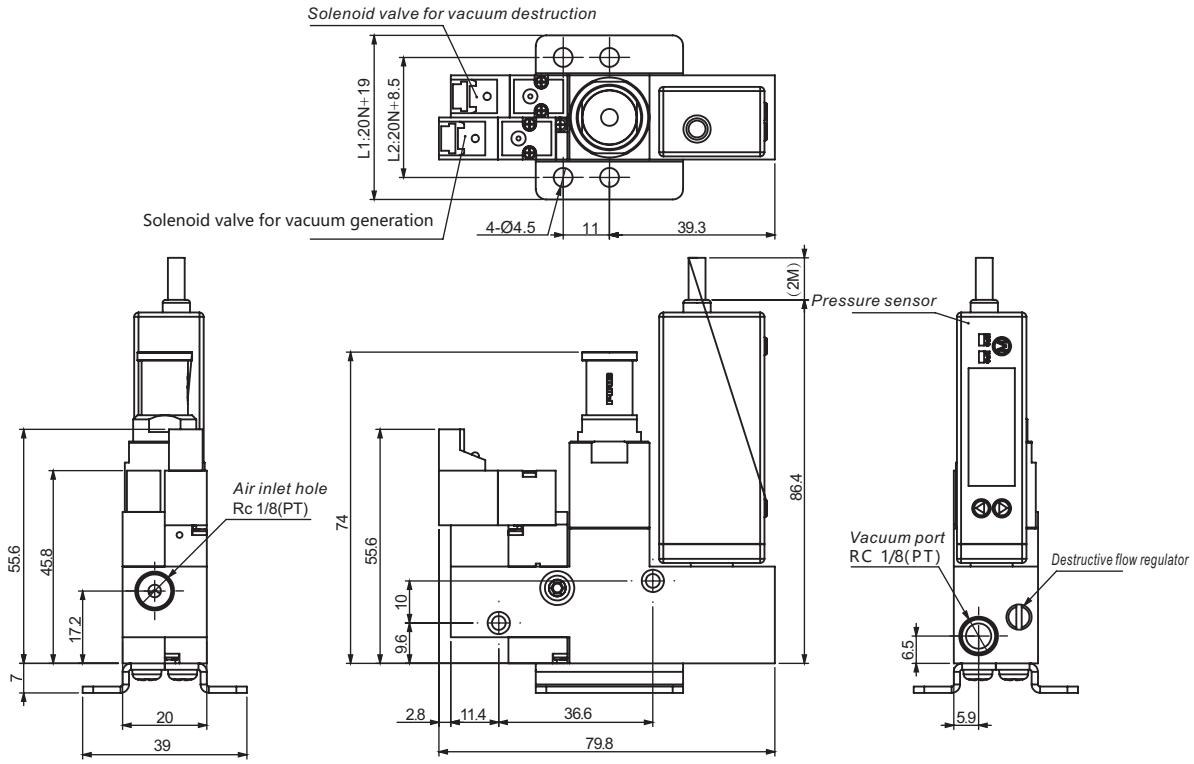

N	1	2	3	4	5	6	7	8	9	10
L1	39.0	59.0	79.0	99.0	119.0	139.0	159.0	179.0	199.0	219.0
L2	28.5	48.5	68.5	88.5	108.5	128.5	148.5	168.5	188.5	200.5

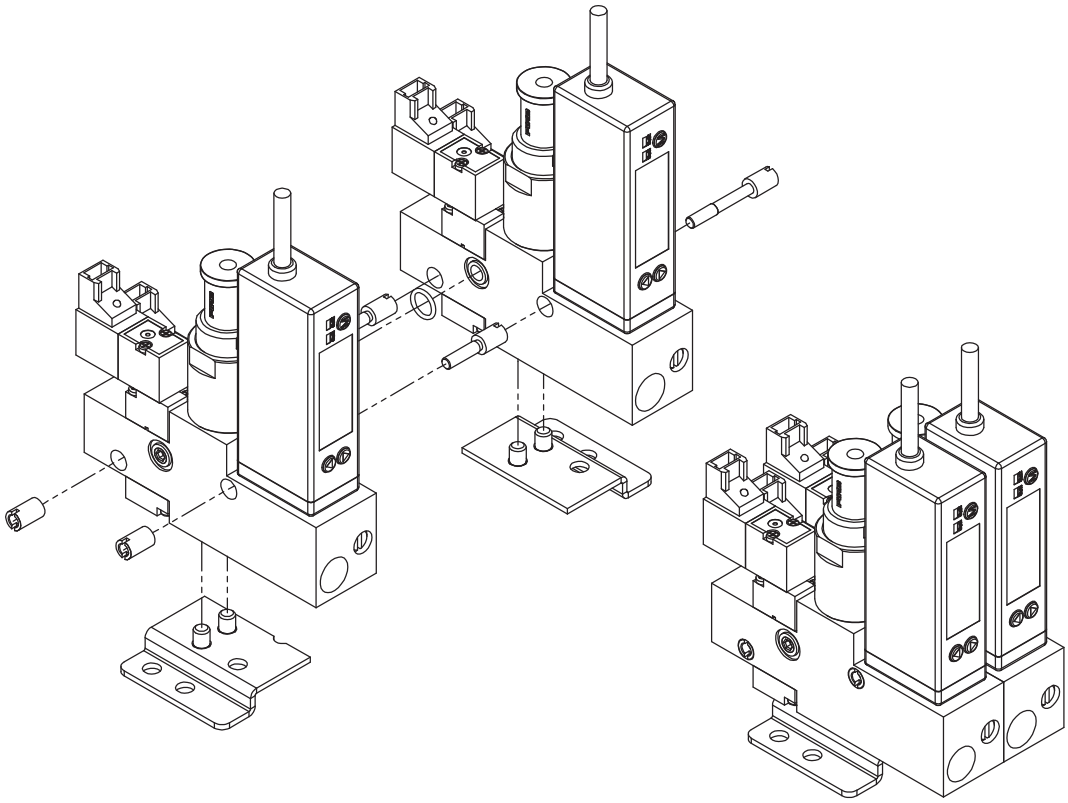

Vacuum Module VPD Series

Advantages

Integrated electric vacuum and blow-off control Can be adapted to all branches
Optimized performance for handling all types of objects
Reduced wiring and easy-to-use
Modular design thanks to the different options Light and compact
No clogging thanks to the through type silencer
Silent operation

Characteristics

(PN)	(Model)	Ø Nozzle(mm)	Air consumed (Nl/min)	Max. vacuum(%)			Air drawn in(Nl/min		
				X	T	N	X	T	N
1.Y05964	VPD-12	1.2	67	40	75	90	150	63	45
1.Y05965	VPD-15	1.5	100	50	75	90	180	95	70
1.Y05966	VPD-20	2	180	50	75	90	250	160	125

As standard, versions N and T are delivered with silencer S and version X withsilencer K. Only exception, the VPD 30 is fitted with silencer K.

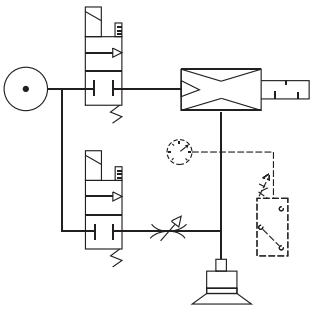

Specifications

Supply	Non-lubricated filtered air, 2 to 6 bar
Optimum pressure	4 bar
Voltage	24V DC
Power	0.7 W
Material	POM - 2017A – Cu Zn – PA6 15% FG
Temperature	0 to 60°C / 32 to 140°F
Number of valve operations	10 million
Operating frequency	Maximum 2 Hz
Function	N.C. (N.O. on request)

Dimensions

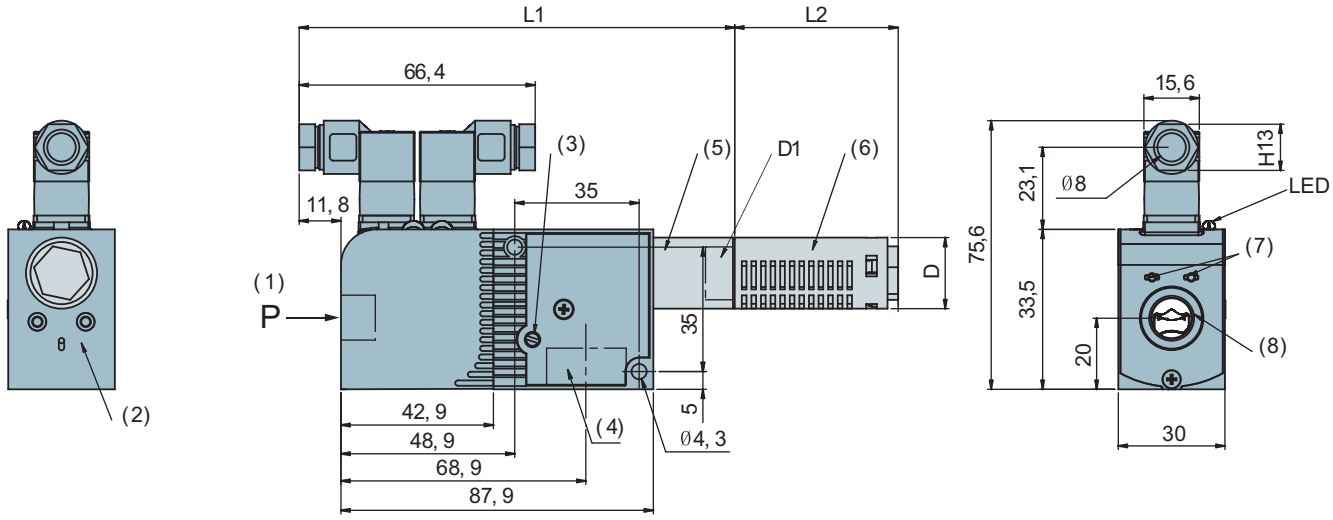

(1) 4 bar compressed air tank
(2) Vacuum switch option mounting zone
(3) Blow-off adjustment
(4) Vacuum 1/2 Gas
(5) Exhaust
(6) Silencer model S or K
(7) Manual controls
(8) 1/4 Gas

PN	Model	L1 (mm)		L2 (mm)			D (mm)		D1 (gas)	
		X	N/T	S(N/T)	K(N/T)	K(X)	X	N/T	X	N/T
1.Y05964	VPD-12	118	123	46	68	121	30	20	1/2	1/4
1.Y05965	VPD-15	118	133	46	68	121	30	20	1/2	1/4
1.Y05966	VPD-20	118	118	62	121	121	30	30	1/2	1/2

Smart communication

The adjacent illustration presents the display panel which enables:
-Initial settings
-Any adjustments
-Production monitoring
-Maintenance
In particular, the "no ASC" alert, helpsto start maintenance operations in order to return to "ASC" operation, which is especially energy saving.

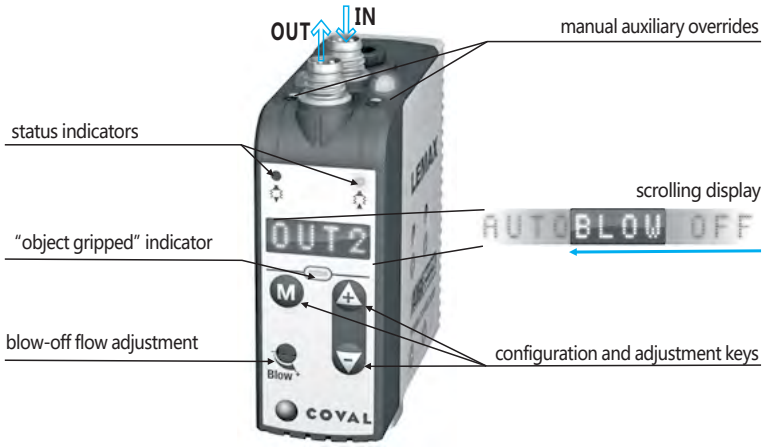

Selection guide

Stand-alone or island modules?

Stand-alone modules are suitable for the most common applications: one module controls one or more suction pads which all operate according to the same sequence. When several suction pads are operating according to different sequences, multiple modules are required, which can be:

- several autonomous modules, OR
- a group of these modules with an internal common pressure unit.

The illustrations opposite guide the selection:
-autonomous modules are coupled with integrated pressure regulators (see p. 9/8)
- in a group, the integrated regulator is eliminated: to maintain the advantage of economical and silent operation, it is recommended to reduce the group's common pressure supply pressure to 4 bar.

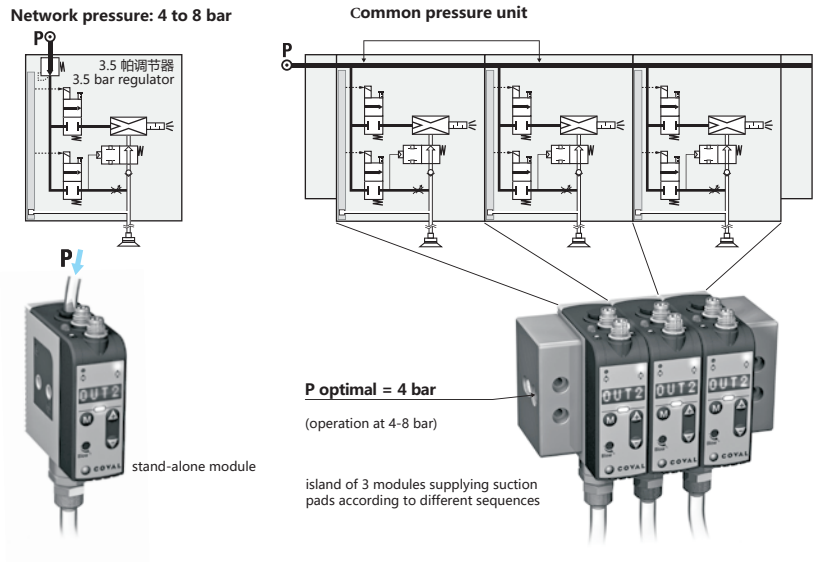

PN	Model
1.Y05969	LEMAX90X14S
1.Y05970	LCPX90X14SL15PQ1

Power determined by the venturi nozzle diameter
The table shows the power levels generated by each of the nozzle diameters available: when the module is operating "ASC" off, a larger nozzle draws and consumes more compressed air.
On the other hand, during "ASC" operation, a large nozzle quickly reaches the vacuum threshold generating power shut-off.
In conclusion:

Selecting the nozzle diameter					
Ø nozzle	Venturi characteristics during"ASC" off operation		"ASC" operation gripping at 65% vacuum vacuum shutoff at 75% Time for a volume of 1L		
	airdrawn in	air consumed	grip time (65% vacuum)	time to75% vacuum	air consumed
1.4mm	70 Nl/min	90 Nl/min	0.99 s	1.38 s	2.2 Nl

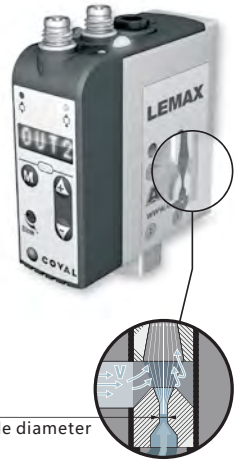

- A large nozzle enables quicker gripping without consuming more during "ASC" operation.
- A small nozzle does not consume less when operating with "ASC" off.

LEMAX

LCPX

Dimensions Mounting options

Stand-alone modules

Side mounting

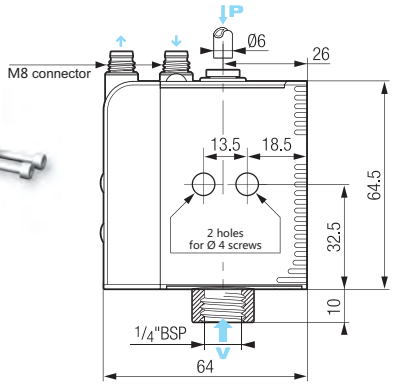

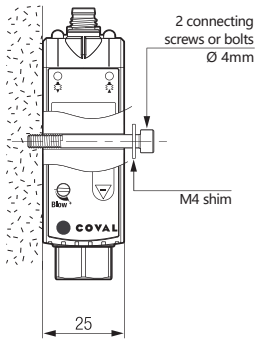

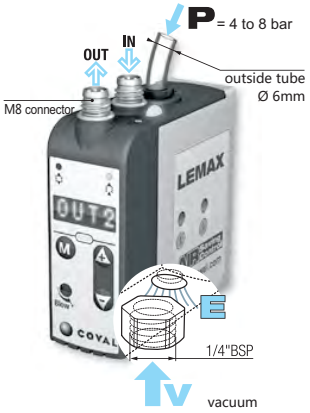

Front mounting

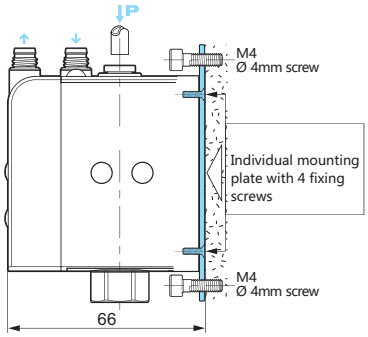

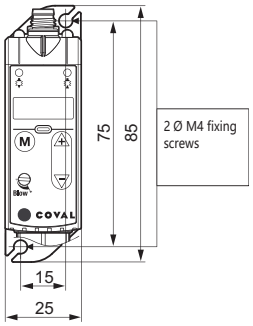

For front mounting, order the necessary kit, in addition to the module:

Front mounting kit:
1 plate + 4 screws

Mounting on DIN rail

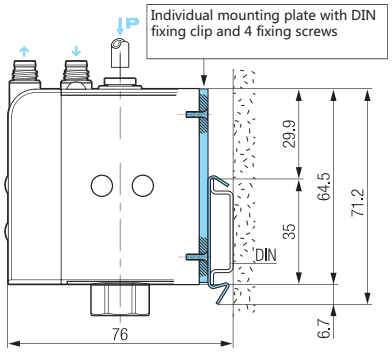

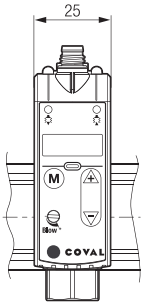

A module can be clipped onto a DIN rail.
For this purpose, the module must first be equipped with an individual DIN installation plate, ordered separately:

DIN rail mounting kit: 1
plate/clip + 4 screws

2- Islands

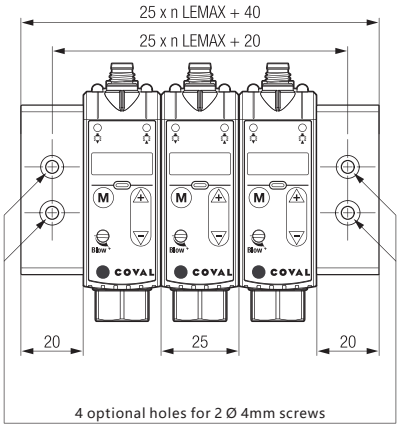

Front mounting

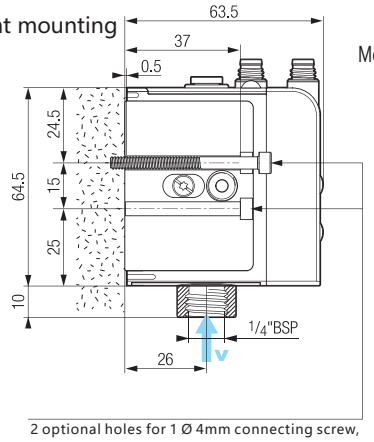

Mounting on DIN rail

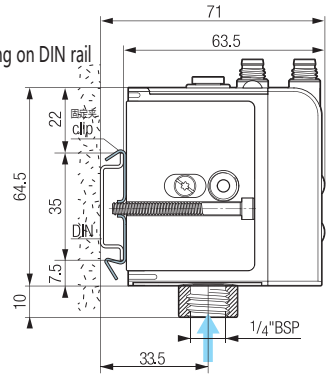

DIN rail mounting kit:2
clips + 2 screws