Large-flow Multi Vacuum Gripper

VLG Series

PISCO KOREA

Woods

VLG Series Application
(SPONGE TYPE)

Aluminum extrusion

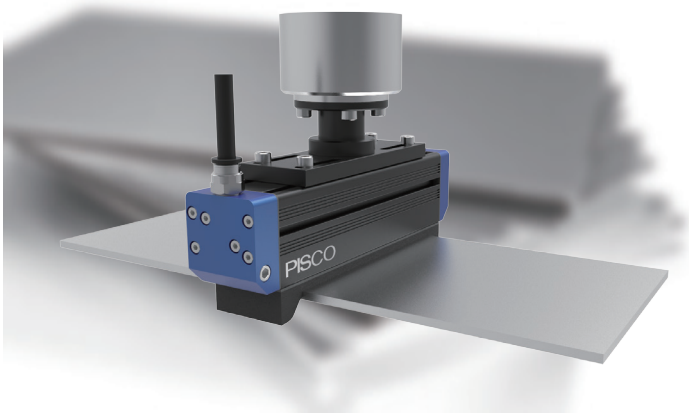

Steel plate

Can

VLG Series Application
(PAD TYPE)

Logistics&Packing

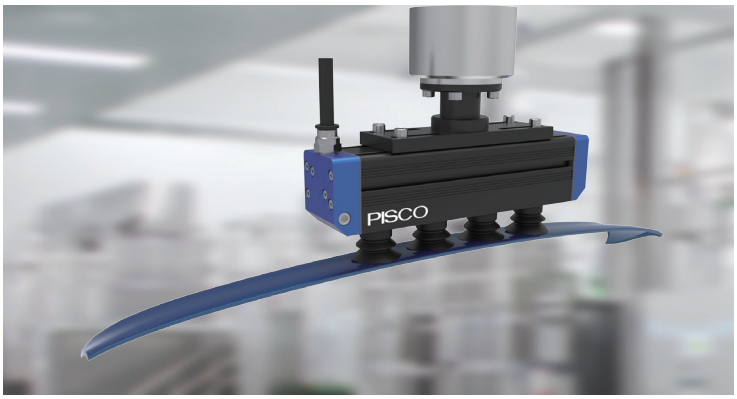

Molded parts

Packing

Others

Vacuum Gripper feature

- Large flow multi nozzle
- Multi nozzle structure ensures high vacuum and large flow, and achieves suction flow rate about twice as much as consumption flow rate
- Unaffected by work size and diameter and material surface
- Body size and stroke can be selected
- Sponge type and pad type can be selected according to the work

Sponge pad type

- Fast and easy replacement without any traces of attachment
- Suitable for rough, uneven surface work
- Work with uneven adsorption position porous or gap

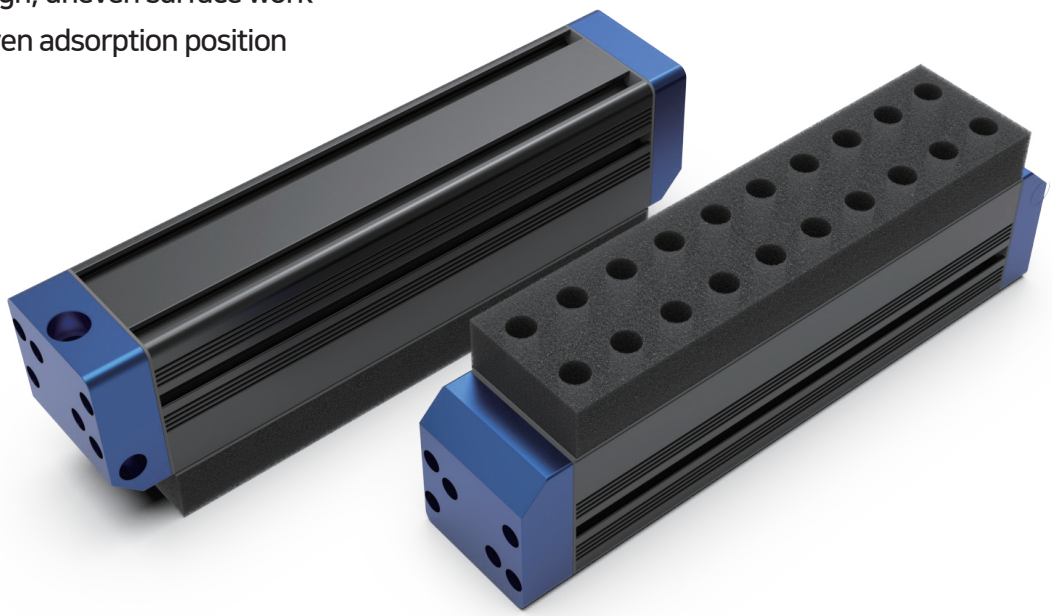

How to replace sponge pad

1. Remove existing sponge pad.
   # If necessary, remove any adhesives and residues.

2. Check that the hole is not clogged
   # If blocked, remove it.

3. Remove adhesive surface paper and attach it to new sponge pad body hole

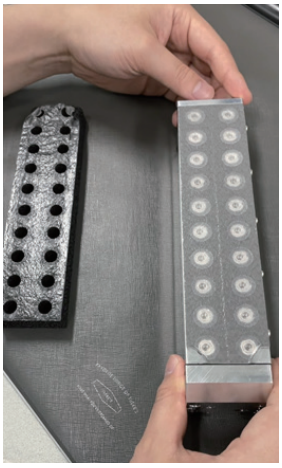

Vacuum gripper feature

Vacuum pad type

- Ø15, Ø20, Ø25, Ø30, Ø40 selectable
- Individual pads can be replaced
- Suitable for soft surface work (box , plastic bag)
- Used in food, packaging etc

Vacuum pad type

Vacuum pad shape					
	Bellow type				Food packaging type
Material	NBR	Electrical conductive NBR	Silicone	Electrical conductive silicone	Silicone
Size	Ø15, Ø20, Ø25, Ø30, Ø40				Ø30, Ø40

Vacuum gripper specification

specification	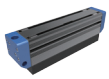		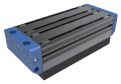	
	Single 50x200	Single Double 50x500	Dual 100x200	Dual Double 100x500
	Nozzle 1ea	Nozzle 2ea		Nozzle 4ea
Pressure	-94kPa	-94kPa		-94kPa
Flow suction	290 ℓ /min	550 ℓ /min		890 ℓ /min
Flow consumption	110 ℓ /min	220 ℓ /min		440 ℓ /min
Fluid	Air			
Pressure range	0.3~0.7MPa			
Supply pressure	0.5MPa			
Temperature range	5~50℃ (Not freezing)			
Nozzle size	Ø1.6mm			

SINGLE
ONE NOZZLE

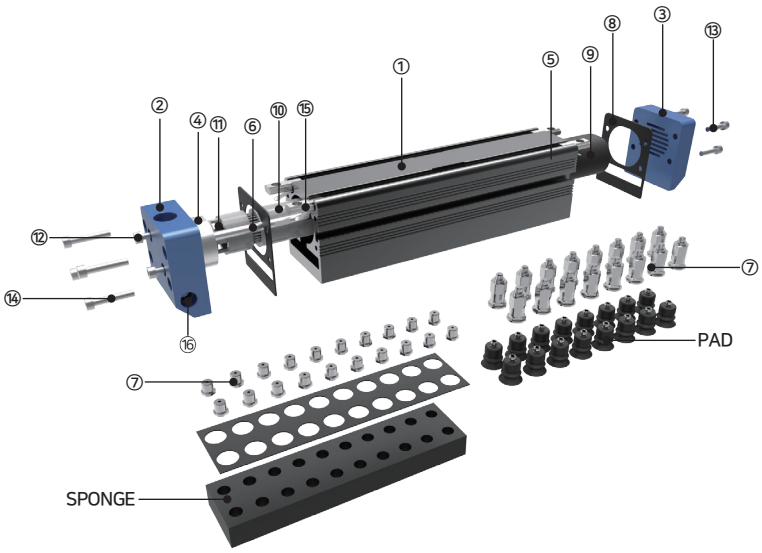

Single type nozzle 1EA
Description and Recommended Strokes

No	Type	Material	No	Type	Material
1	Body-50x200	AL	9	Silencer Element	PU
2	P-Port Block-50S	AL	10	VLMH16-NS-KOR	-
3	EX-Port Block-50s	AL	11	O-Ring-S28(Ø27.5x2)	NBR
4	Nozzle-P-Guide	AL	12	M4x15 Bolt	STS
5	Nozzle-EX-Guide	AL	13	M4x20 Bolt	STS
6	Nozzle Guide Bolt-M4	AL	14	M4x25 Bolt	STS
7	Check Valve 1Set	STS	15	M6 Insert Nut(30)	Steel
8	Seal-Sponge	PORON	16	Plug PT 1/8(Seal)	STS

SINGLE
TWO NOZZLES

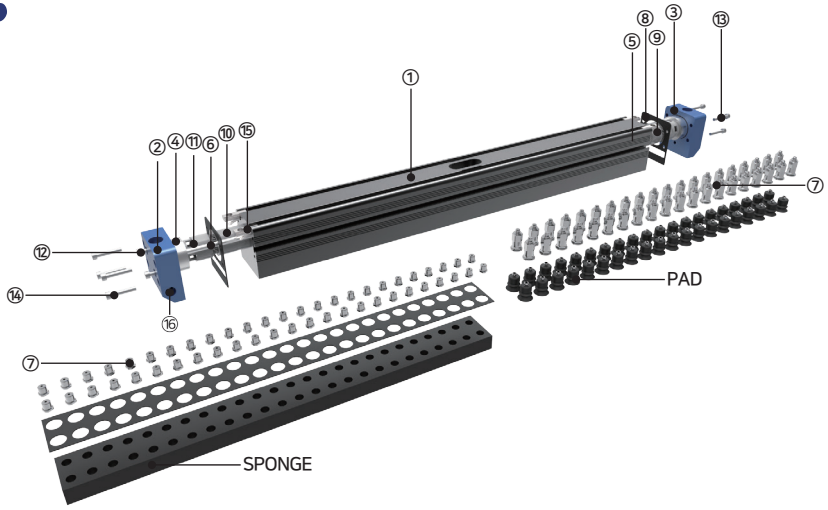

Single type nozzle 2EA
Description and Recommended Strokes

DUAL
TWO NOZZLES

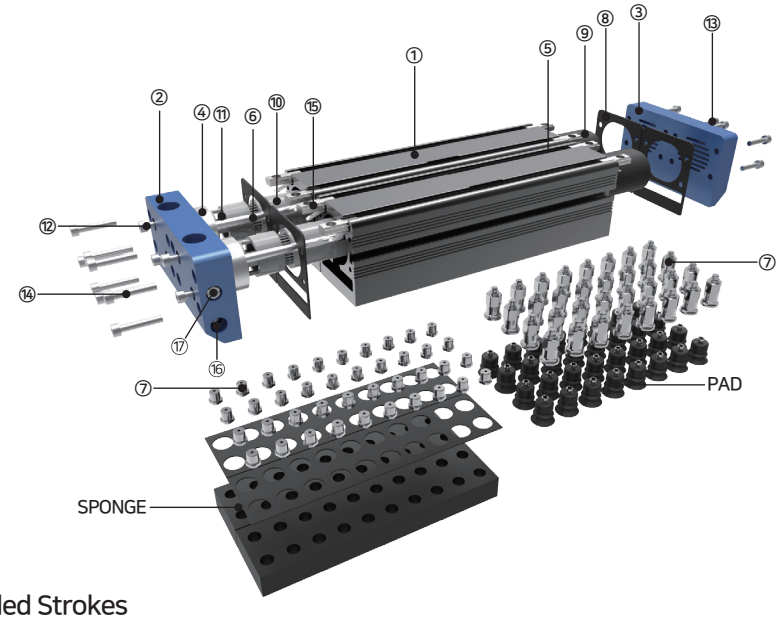

Dual type nozzle 2EA
Description and Recommended Strokes

No	Name	Material	No	Name	Material
1	Body-50x200	AL	10	VLMH16-NS-KOR	-
2	P-Port Block-50S	AL	11	O-Ring-S28(Ø27.5x2)	NBR
3	EX-Port Block-50s	AL	12	M4x15 Bolt	STS
4	Nozzle-P-Guide	AL	13	M4x20 Bolt	STS
5	Nozzle-EX-Guide	AL	14	M4x25 Bolt	STS
6	Nozzle Guide Bolt-M4	AL	15	M6 Insert Nut(30)	STEEL
7	Check Valve 1Set	STS	16	Plug PT 1/8(Seal)	STS
8	Seal-Sponge	PORON	17	LP-M5	BRASS
9	Silencer Element	PU			

DUAL
FOUR NOZZLES

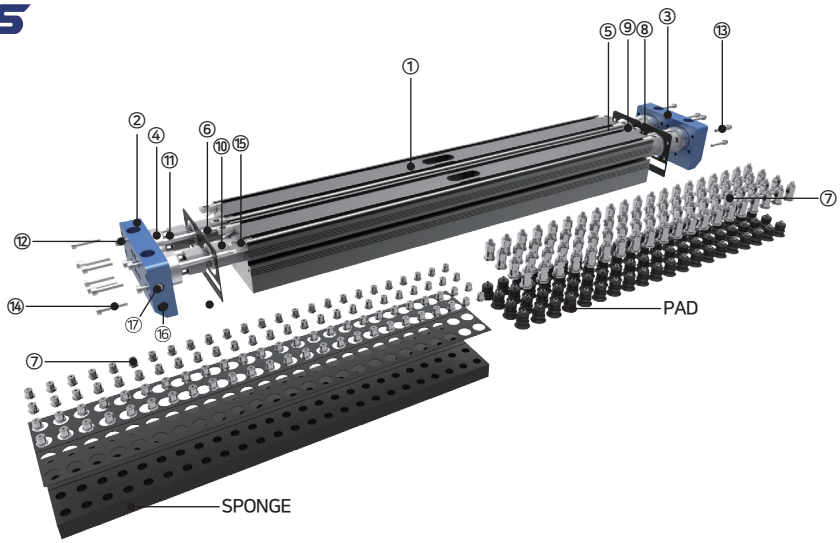

Dual type nozzle 4EA
Description and Recommended Strokes

How to order

VLG 20S - S2L - EP20S - CV - 161 - V4N

- VLG: Vacuum gripper
- 20S: ① size
- S2L: ② Pad & Sponge quantity
- EP20S: ③ Pad & Sponge Spec
- CV: ④ Check valve spec
- 161: ⑤ Vacuum generator spec
- V4N: ⑥ Sensor spec

① Size

ST(mm)	200	300	400	500	600	700	800
Single(50)	20S	30S	40S	50S	60S	70S	80S
Dual(100)	20D	30D	40D	50D	60D	70D	80D

② Pad & Sponge quantity ※Based on single 50 Type

Type	Number	Diameter (mm)	Quantity	Pitch (mm)	Pad Q'ty						
					ST200	ST300	ST400	ST500	ST600	ST700	ST800
PAD	P2L	Ø15	2	20	20	30	40	50	60	70	80
		Ø20	2	25	16	24	32	40	48	56	64
		Ø25	2	30	12	19	25	32	39	45	52
	P1L	Ø30	1	40	5	7	10	12	15	17	20
		Ø40	1	50	4	6	8	10	12	14	16
SPONGE	S2L	Ø10	2	20	20	30	40	50	60	70	80

② Pad & Sponge quantity ※Based on Dual 100 Type

Type	Number	Diameter (mm)	Quantity	Pitch (mm)	Pad Q'ty						
					ST200	ST300	ST400	ST500	ST600	ST700	ST800
PAD	P4L	Ø15	4	20	40	60	80	100	120	140	160
		Ø20	4	25	32	48	64	80	96	112	128
		Ø25	4	30	24	38	50	64	78	90	104
	P2L	Ø30	2	40	10	14	20	24	30	34	40
		Ø40	2	50	8	12	16	20	24	28	32
SPONGE	S4L	Ø10	4	20	40	60	80	100	120	140	160

③ Pad & Sponge Specifications

Type	Number	Material	Spec
PAD	15	-	Ø15mm Pad type single body
	15BN	NBR	Ø15mm, Bellows type
	15BS	Silicon	
	20	-	Ø20mm Pad type single body
	20BN	NBR	Ø20mm, Bellows type
	20BS	Silicon	
	25	-	Ø25mm Pad type single body
	25BN	NBR	Ø25mm, Bellows type
	25BS	Silicon	
	30	-	Ø30mm Pad type single body
	30BN	NBR	Ø30mm, Bellows type
	30BS	Silicon	
	40	-	Ø40mm Pad type single body
	40BN	NBR	Ø40mm, Bellows type
	40BS	Silicon	
SPONGE	EP20S	EPDM	Foam type , Width 20mm

④ Holder Specifications

Number	Type	Remark
Empty	None	-
ECV	Rupture valve	PAD Type
CV	Check valve	SPONGE Type

⑤ Vacuum generator specifations

Number	Nozzle Q'ty	Inhalation flow (L/min)	Consumption flow (L/min)	Size
161	1	350	150	20S~40S
162	2	600	300	50S~80S 20D~40D
164	4	820	470	50D~80D

⑥ Sensor specifications

Number	Specification	Type
V4N	Digital gauge NPN SW2 points + analog	VUS-32R-NV
V4P	Digital gauge PNP SW2 points + analog	VUS-32R-PV

Model designation of sponge pad

VLG 200 - EP20S

Vacuum gripper

① Size

② Sponge speicifation

① Size

ST(mm)	200	300	400	500	600	700	800
Code	200	300	400	500	600	700	800

② Sponge speicifation

Type	Code	Material	Specification
SPONGE	EP20S	EPDM	Foam type , Thickness 20mm

Model designation of vacuum pad

VP 15 B N

Vacuum pad

① Size ② Type ③ Material

① Size

Code	15	20	25	30	40
Diameter(mm)	Ø15	Ø20	Ø25	Ø30	Ø40

② Shape

Code	B
Type	Bellows

③ Material

Code	N	S
Material	Nitrill	Silicon

Model designation of vacuum pad + bolt

VP 15 B N - M4

Vacuum pad

① Size ② Type ③ Material ④ Connection configuration

① Size

Code	15	20	25	30	40
Diameter(mm)	Ø15	Ø20	Ø25	Ø30	Ø40

② Type

Code	B
Type	Bellows

③ Material

Code	N	S
Material	Nitrill	Silicon

④ Connection configuration

Code	M4	M6			
Size	M4x0.7	M6x1			
Applicable pad	Ø15	Ø20	Ø25	Ø30	Ø40

Model designation of vacuum pad for packaging

VP 30 PB S 2 3

Vacuum pad

① Size ② Type ③ Material ④ Durometer of lip ⑤ Folds of bellows cup

① Size

Code	30	40
Diameter(mm)	Ø30	Ø40

② Shape

Code	PB
Type	Packaging

③ Material

Code	S
Material	Silicon

④ Durometer of lip

Code	N	S
Durometer	20°	30°
Color	Red	Blue

⑤ Folds of bellows cup

Code	3	5
Folds	3	5

Model designation for oversuction preventing adapter

VP	30	PB	-	FS
Vacuum pad	① Size	② Type		③ Oversuction preventing adapter

① Size

Code	30	40
Diameter(mm)	Ø30	Ø40

② Shape

Code	PB
Type	Packaging

③ Oversuction preventing adapter

Code	FS	MS	FF	MF
Material	Spherical type	Stainless steel mesh attached spherical	Flat type	Stainless steel mesh attached flat type

Model designation of vacuum pad for packaging + bolt

VP	E	-	PB15	-	M6
Vacuum pad	① Holder type		② Connecting code		③ Connection configuration

① Holder type

Code	E
Type	Direct mount type

② Connecting code

Code	PB15	
Applicable pad	Ø30	Ø40

③ Connection configuration

Code	M6
Size	M6x1

Model designation of vacuum pad for packaging set

VP	E	30	PB	S	2	3	M6	-	FS
Vacuum pad	① Holder type	② Pad size	③ Pad type	④ Material	⑤ Durometer of lip	⑥ Folds of bellows cup	⑦ Connection size		⑧ Oversuction preventing adapter

① Holder type

Code	E
Type	Direct mount type

② Pad size

Code	30	40
Diameter(mm)	Ø30	Ø40

③ Pad type

Code	PB
Type	Packaging

④ Material

Code	S
Material	Silicon

⑤ Durometer of lip

Code	N	S
Durometer	20°	30°
Color	Red	Blue

⑥ Folds of bellows cup

Code	3	5
Folds	3	5

⑦ Connection size

Code	M6
Size	M6x1

⑧ Oversuction preventing adapter

Code	FS	MS	FF	MF
Material	Spherical type	Stainless steel mesh attached spherical	Flat type	Stainless steel mesh attached flat type

Dimension(mm)

VLG□S-S2L-EP20S-□-161

※ Sponge Type
Single st200~400

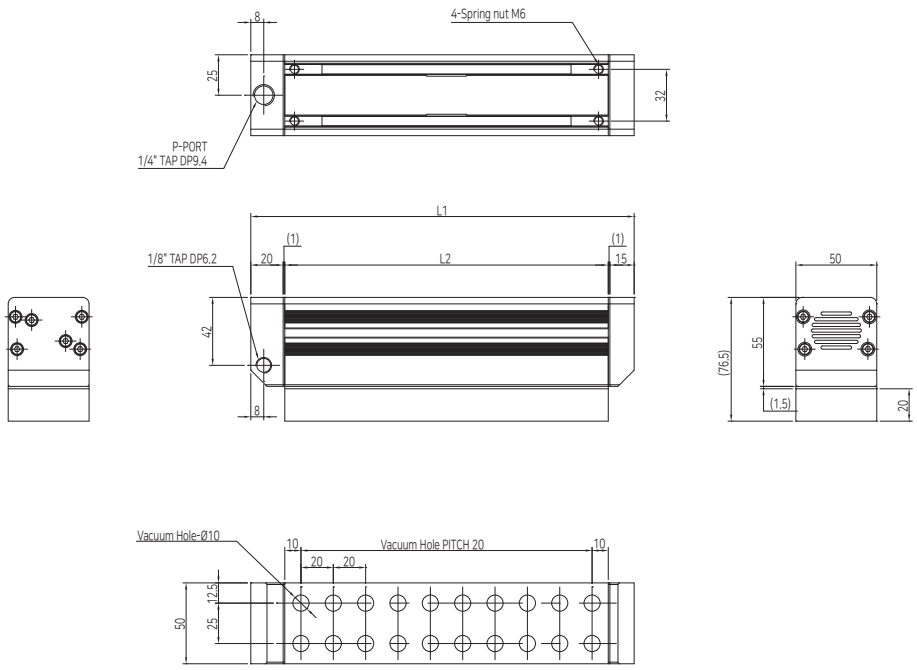

Code	L1	L2	Vacuum Hole(Ø10)	Weight (kg)
VLG20S-S2L-EP20S-161	237	200	20	1.0
VLG20S-S2L-EP20S-CV-161	237	200	20	1.1
VLG30S-S2L-EP20S-161	337	300	30	1.3
VLG30S-S2L-EP20S-CV-161	337	300	30	1.4
VLG40S-S2L-EP20S-161	437	400	40	1.7
VLG40S-S2L-EP20S-CV-161	437	400	40	1.8

Dimension(mm)

VLG□D-S2L-EP20S-□-162

※ Sponge Type
Single st500~800

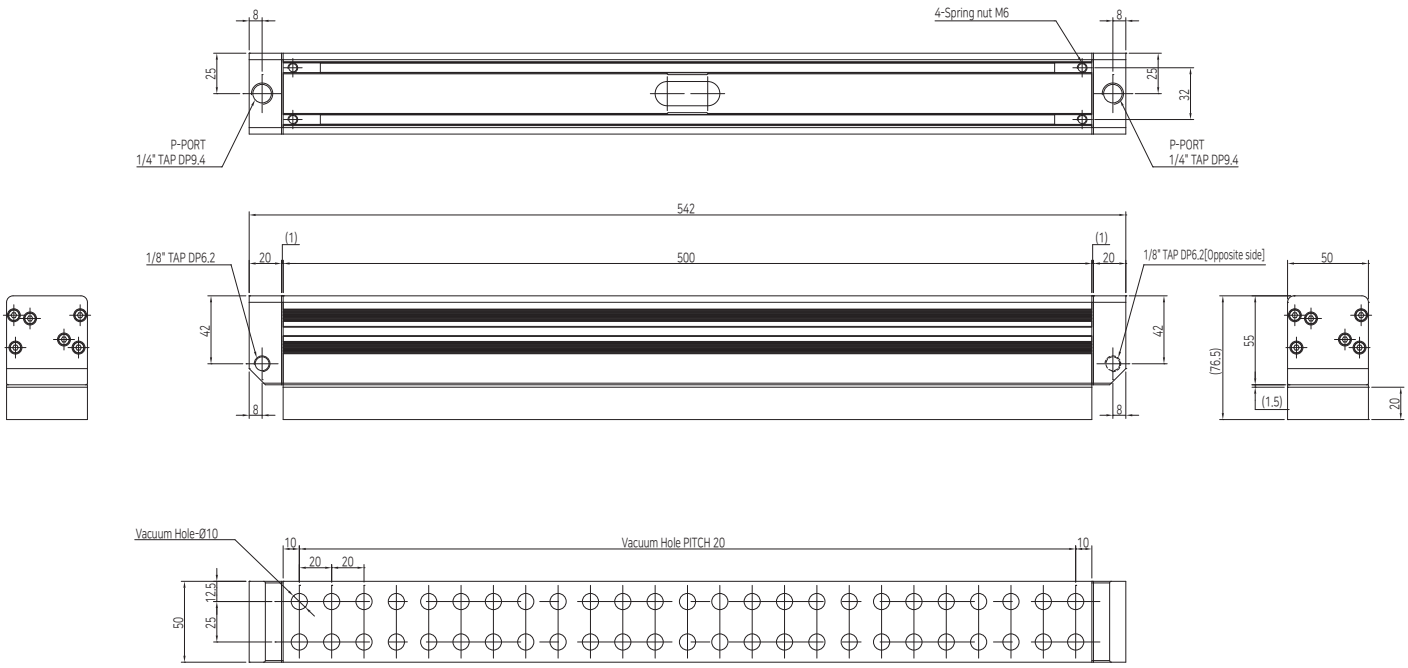

Code	L1	L2	Vacuum Hole(Ø10)	Weight (kg)
VLG50S-S2L-EP20S-162	542	500	50	2.1
VLG50S-S2L-EP20S-CV-162	542	500	50	2.3
VLG60S-S2L-EP20S-162	642	600	60	2.5
VLG60S-S2L-EP20S-CV-162	642	600	60	2.6
VLG70S-S2L-EP20S-162	742	700	70	2.8
VLG70S-S2L-EP20S-CV-162	742	700	70	3.0
VLG80S-S2L-EP20S-162	842	800	80	3.1
VLG80S-S2L-EP20S-CV-162	842	800	80	3.3

Dimension(mm)

VLG□D-S4L-EP20S-□-162

※ Sponge Type
Dual st200~400

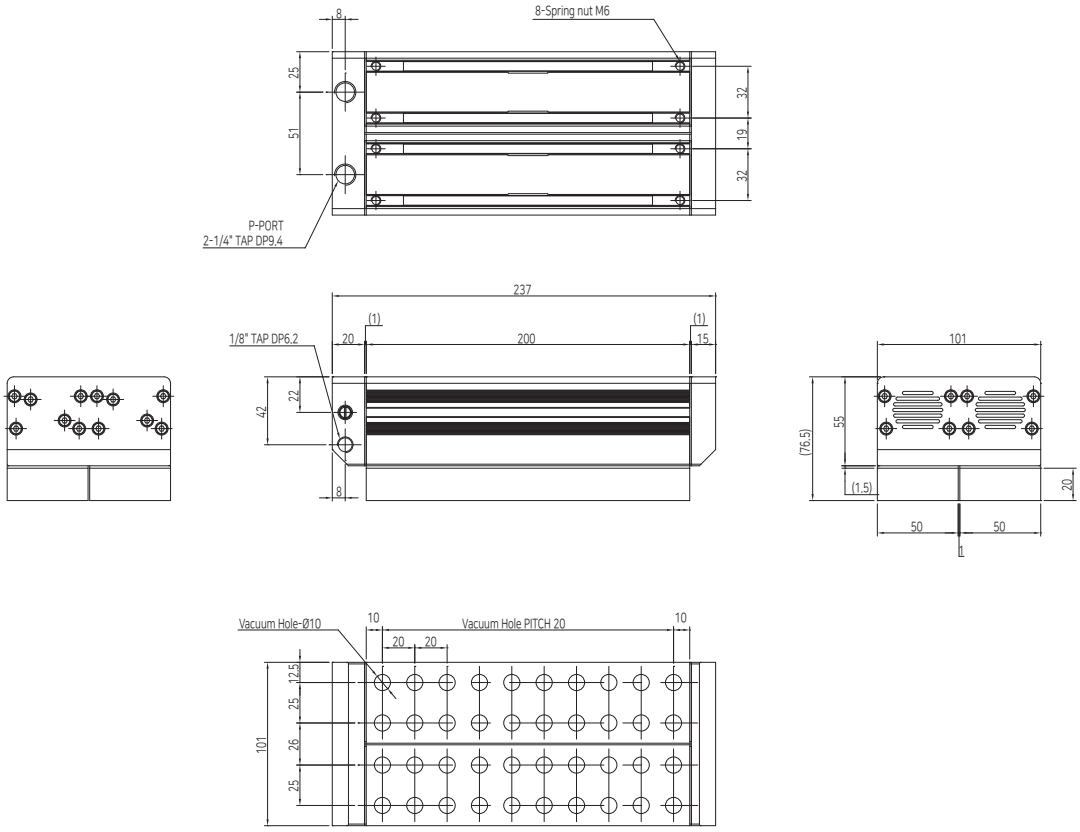

Code	L1	L2	Vacuum Hole(Ø10)	Weight (kg)
VLG20D-S4L-EP20S-162	237	200	20	2.0
VLG20D-S4L-EP20S-CV-162	237	200	20	2.1
VLG30D-S4L-EP20S-162	337	300	30	2.7
VLG30D-S4L-EP20S-CV-162	337	300	30	2.8
VLG40D-S4L-EP20S-162	437	400	40	3.4
VLG40D-S4L-EP20S-CV-162	437	400	40	3.5

Dimension(mm)

VLG□D-S4L-EP20S-□-164

※ Sponge Type
Dual st500~800

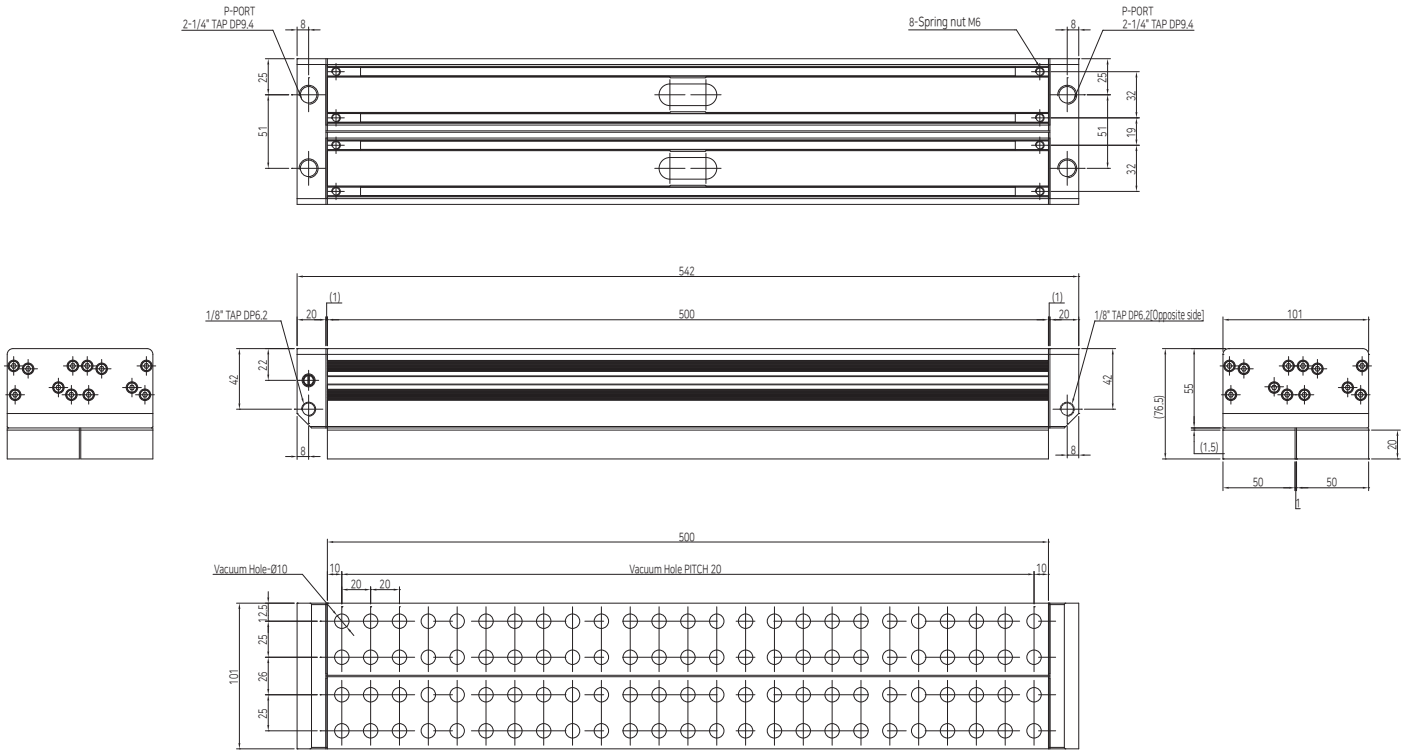

Code	L1	L2	Vacuum Hole(Ø10)	Weight (kg)
VLG50D-S4L-EP20S-164	542	500	50	4.3
VLG50D-S4L-EP20S-CV-164	542	500	50	4.5
VLG60D-S4L-EP20S-164	642	600	60	5.1
VLG60D-S4L-EP20S-CV-164	642	600	60	5.2
VLG70D-S4L-EP20S-164	742	700	70	5.8
VLG70D-S4L-EP20S-CV-164	742	700	70	5.9
VLG80D-S4L-EP20S-164	842	800	80	6.5
VLG80D-S4L-EP20S-CV-164	842	800	80	6.6

Dimension(mm)

VLG□S-P2L-15B( )-□-161

※ Pad Type
Single st200~400

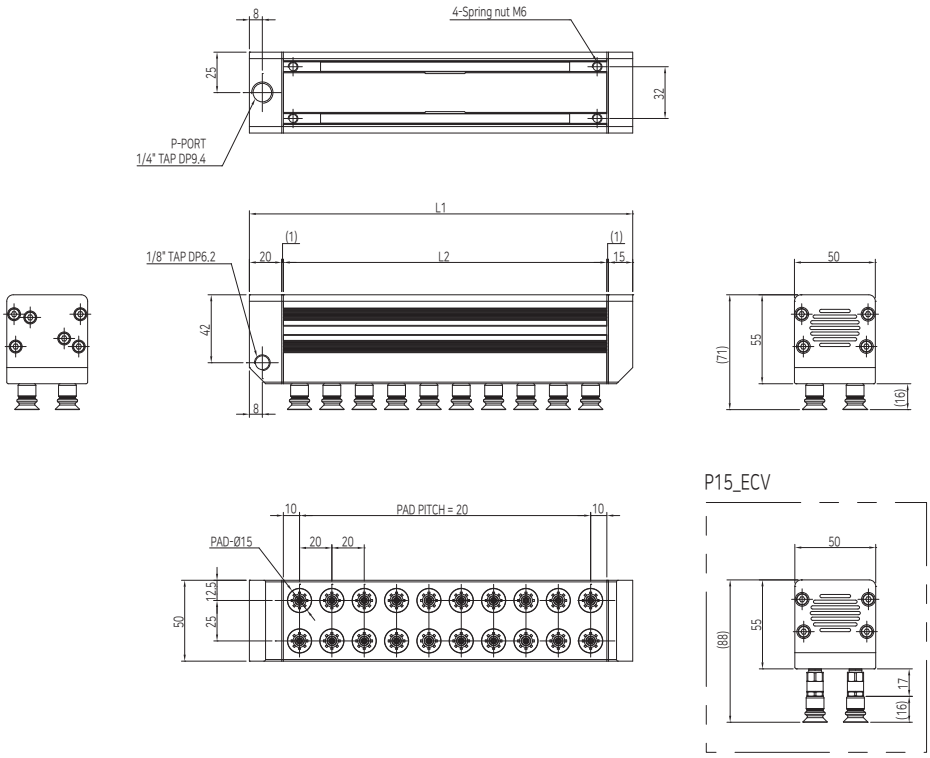

Code	L1	L2	Pad (Ø15)	Weight (kg)
VLG20S-P2L-15B( )-161	237	200	20	1.0
VLG20S-P2L-15B( )-ECV-161	237	200	20	1.2
VLG30S-P2L-15B( )-161	337	300	30	1.3
VLG30S-P2L-15B( )-ECV-161	337	300	30	1.6
VLG40S-P2L-15B( )-161	437	400	40	1.7
VLG50S-P2L-15B( )-ECV-161	437	400	40	2.0

Dimension(mm)

VLG□S-P2L-15B( )-□-162

※ Pad Type
Single st500~800

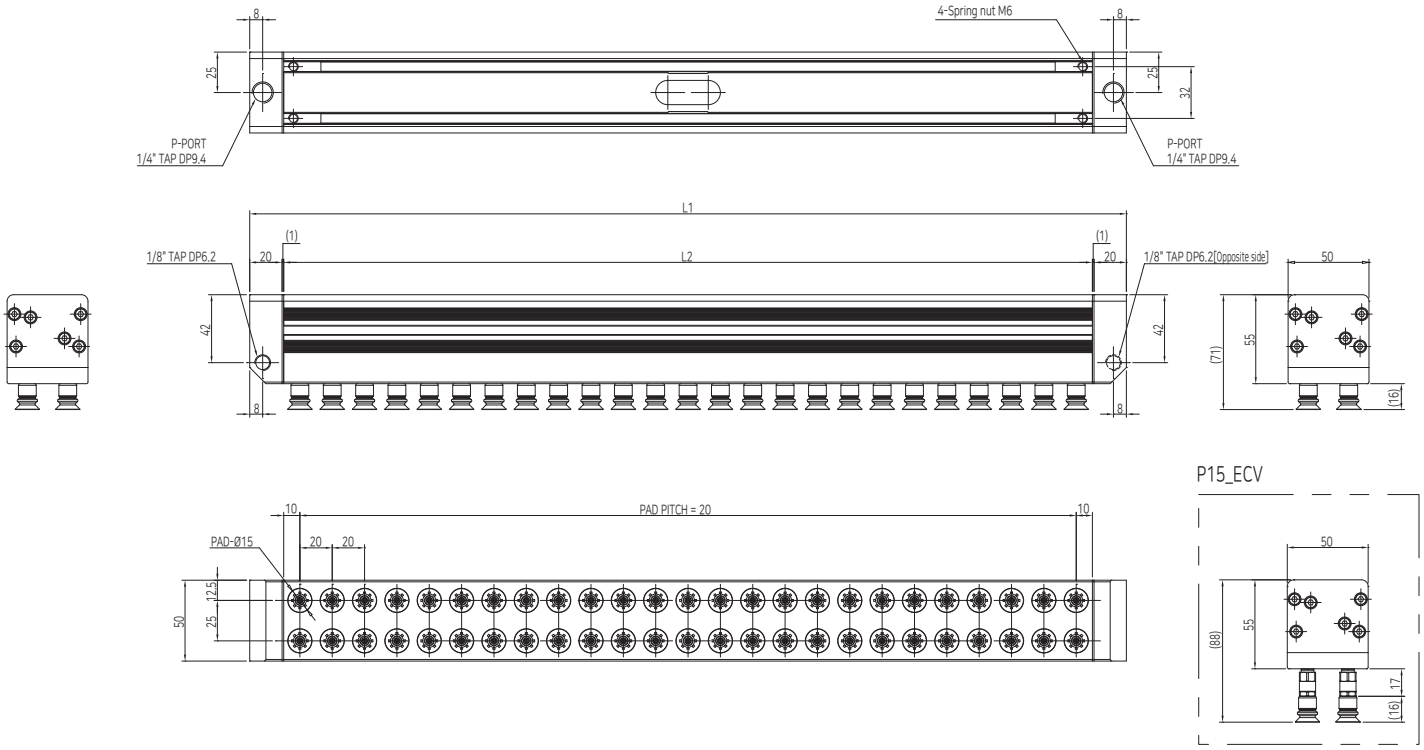

Code	L1	L2	Pad (Ø15)	Weight (kg)
VLG50S-P2L-15B( )-162	542	500	50	2.2
VLG50S-P2L-15B( )-ECV-162	542	500	50	2.6
VLG60S-P2L-15B( )-162	642	600	60	2.5
VLG60S-P2L-15B( )-ECV-162	642	600	60	3.0
VLG70S-P2L-15B( )-162	742	700	70	2.9
VLG70S-P2L-15B( )-ECV-162	742	700	70	3.4
VLG80S-P2L-15B( )-162	842	800	80	3.2
VLG80S-P2L-15B( )-ECV-162	842	800	80	3.8

Dimension(mm)

VLG□D-P4L-15B( )-□-162

※ Pad Type
Dual st200~400

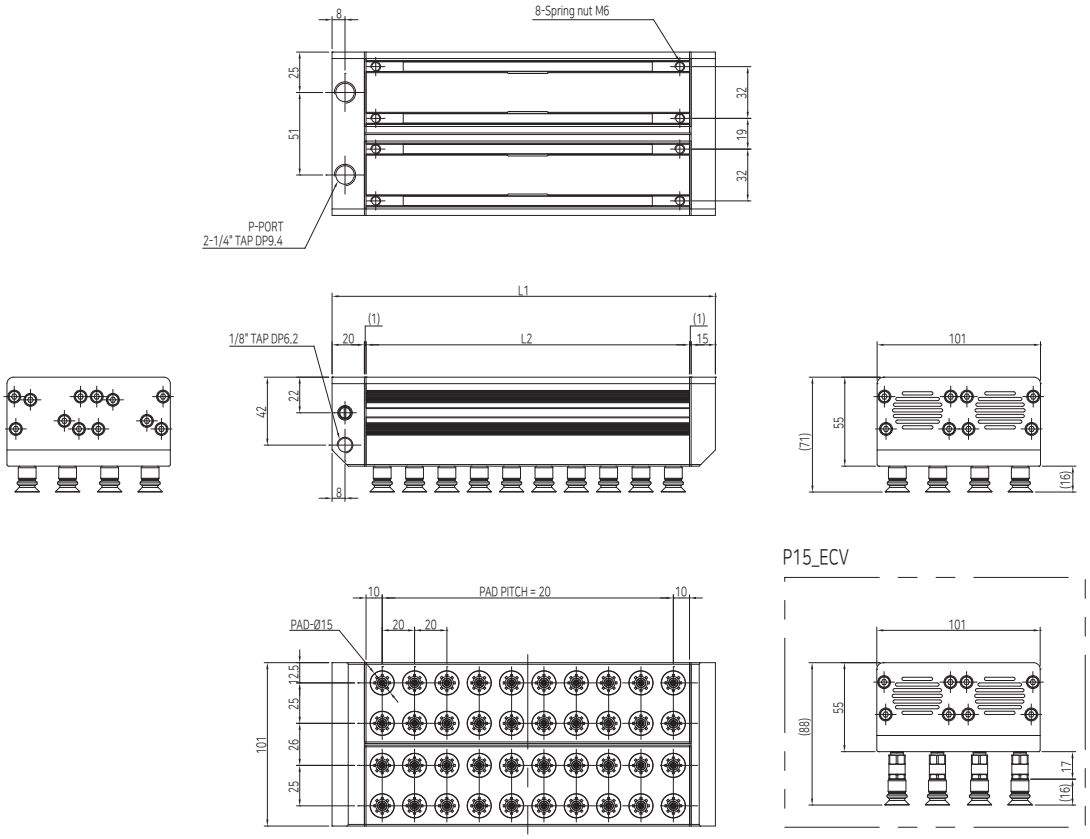

Code	L1	L2	Pad (Ø15)	Weight (kg)
VLG20D-P4L-15B( )-162	237	200	40	2.0
VLG20D-P4L-15B( )-ECV-162	237	200	40	2.4
VLG30D-P4L-15B( )-162	337	300	60	2.7
VLG30D-P4L-15B( )-ECV-162	337	300	60	3.1
VLG40D-P4L-15B( )-162	437	400	80	3.4
VLG40D-P4L-15B( )-ECV-162	437	400	80	4.0

Dimension(mm)

VLG□D-P4L-15B( )-□-164

※ Pad Type
Dual st500~800

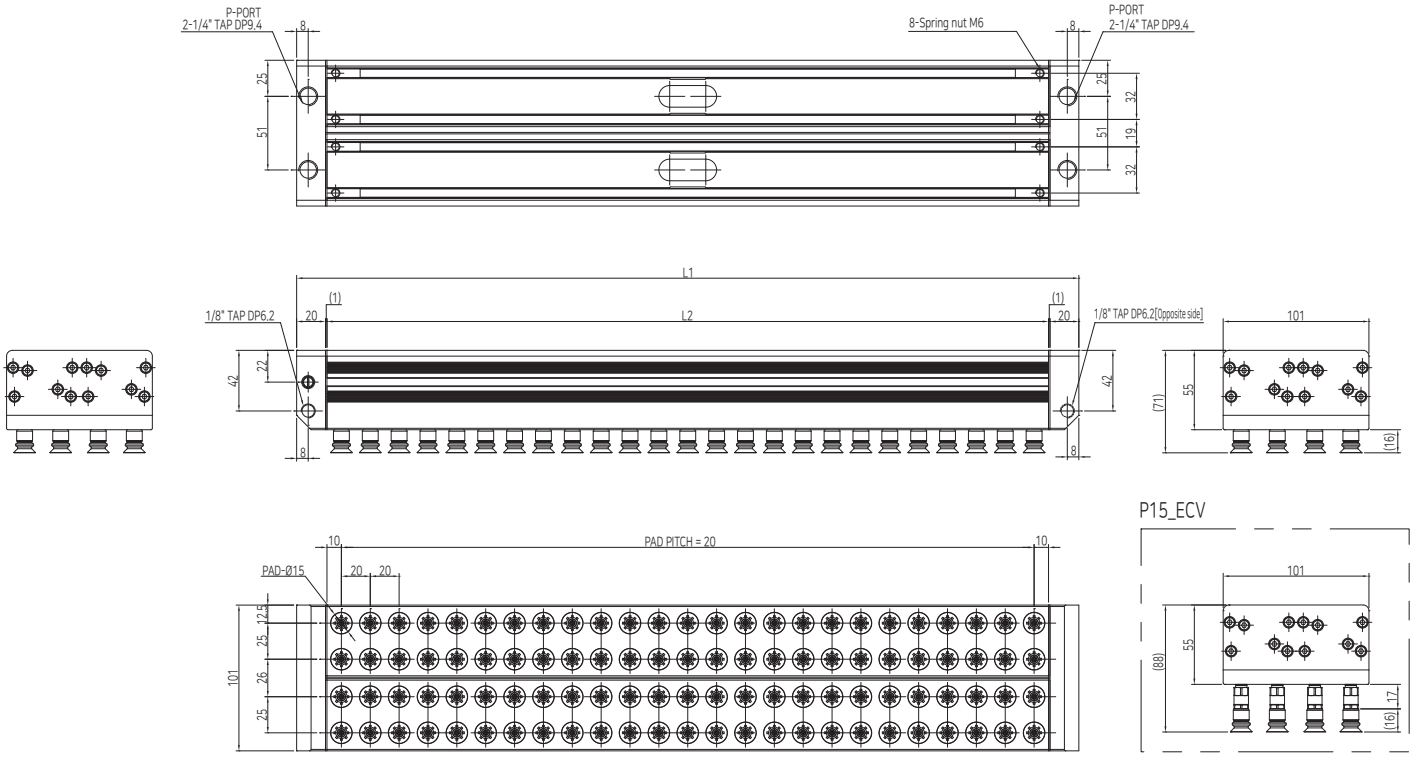

Code	L1	L2	Pad (Ø15)	Weight (kg)
VLG50D-P4L-15B( )-164	542	500	100	4.4
VLG50D-P4L-15B( )-ECV-164	542	500	100	5.1
VLG60D-P4L-15B( )-164	642	600	120	5.0
VLG60D-P4L-15B( )-ECV-164	642	600	120	6.0
VLG70D-P4L-15B( )-164	742	700	140	5.7
VLG70D-P4L-15B( )-ECV-164	742	700	140	6.8
VLG80D-P4L-15B( )-164	842	800	160	6.4
VLG80D-P4L-15B( )-ECV-164	842	800	160	7.6

Dimension(mm)

VLG□S-P2L-20B( )-□-161

※ Pad Type
Single st200~400

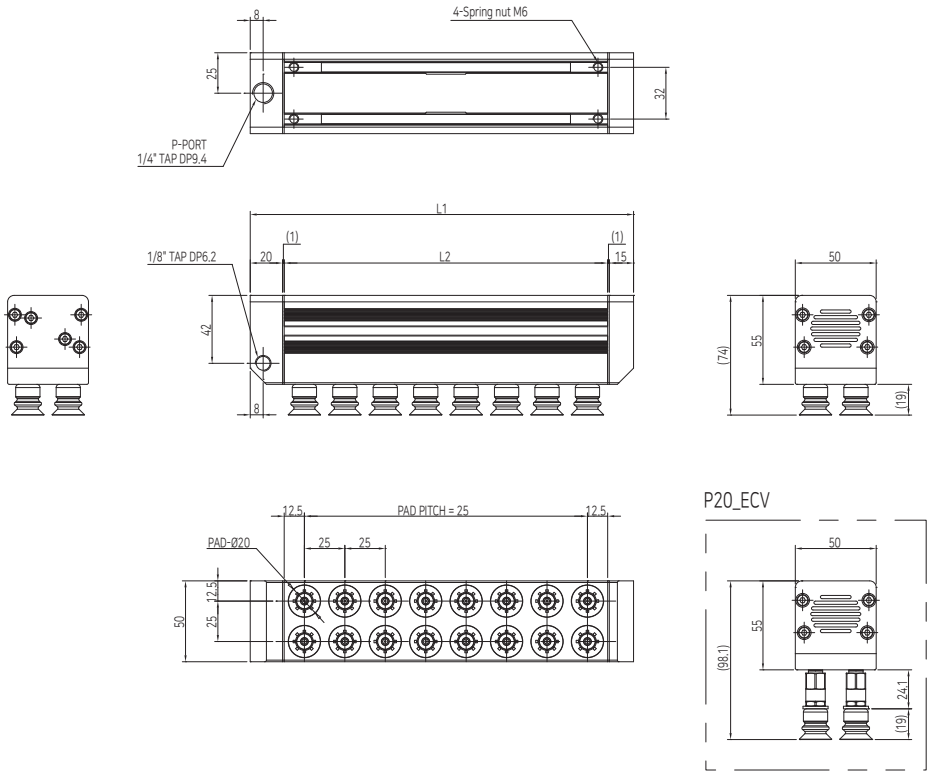

Code	L1	L2	Pad (Ø20)	Weight (kg)
VLG20S-P2L-20B( )-161	237	200	16	1.1
VLG20S-P2L-20B( )-ECV-161	237	200	16	1.3
VLG30S-P2L-20B( )-161	337	300	24	1.4
VLG30S-P2L-20B( )-ECV-161	337	300	24	1.7
VLG40S-P2L-20B( )-161	437	400	32	1.8
VLG40S-P2L-20B( )-ECV-161	437	400	32	2.2

Dimension(mm)

VLG□S-P2L-20B( )-□-162

※ Pad Type
Single st500~800

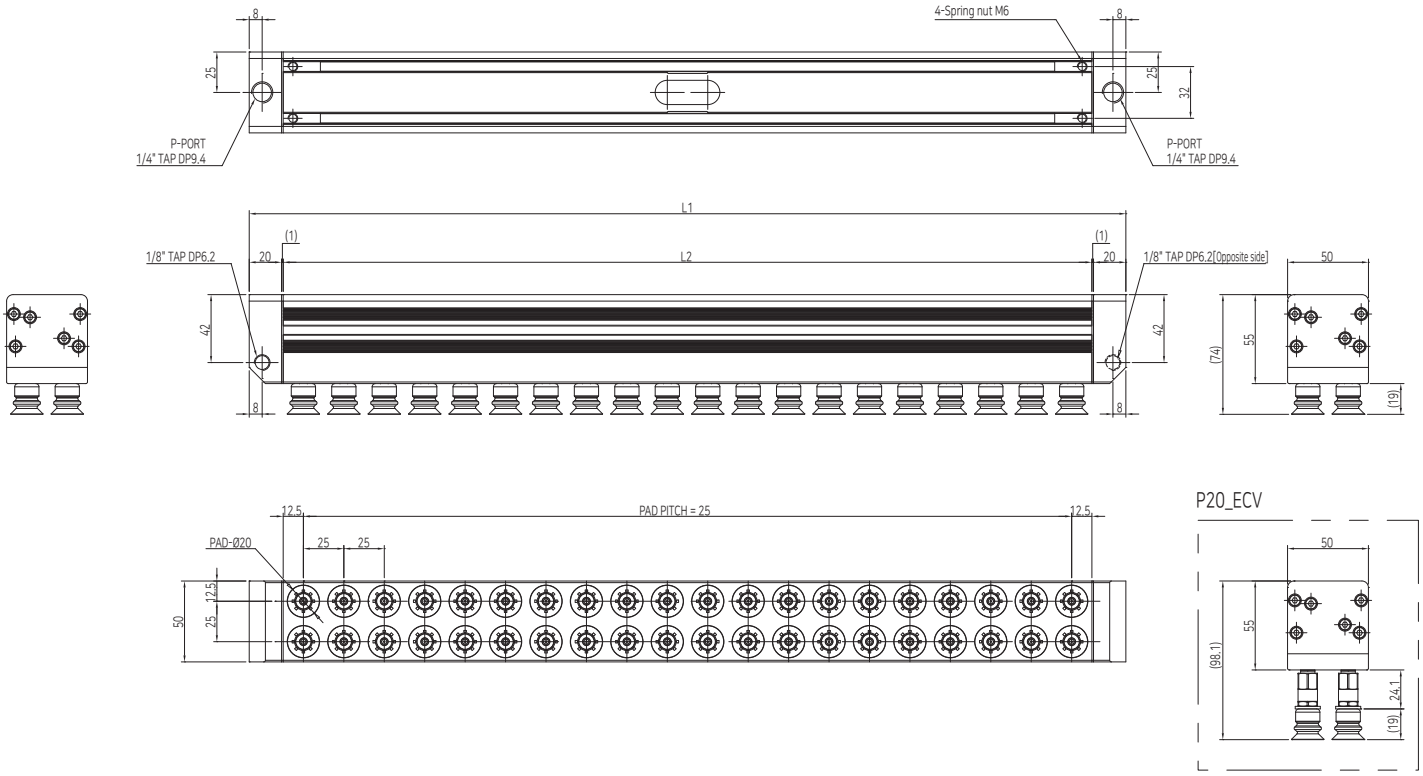

Code	L1	L2	Pad (Ø20)	Weight (kg)
VLG50S-P2L-20B( )-162	542	500	40	2.3
VLG50S-P2L-20B( )-ECV-162	542	500	40	2.8
VLG60S-P2L-20B( )-162	642	600	48	2.6
VLG60S-P2L-20B( )-ECV-162	642	600	48	3.2
VLG70S-P2L-20B( )-162	742	700	56	3.0
VLG70S-P2L-20B( )-ECV-162	742	700	56	3.7
VLG80S-P2L-20B( )-162	842	800	64	3.3
VLG80S-P2L-20B( )-ECV-162	842	800	64	4.2

Dimension(mm)

VLG□D-P4L-20B( )-□-162

※ Pad Type
Dual st200~400

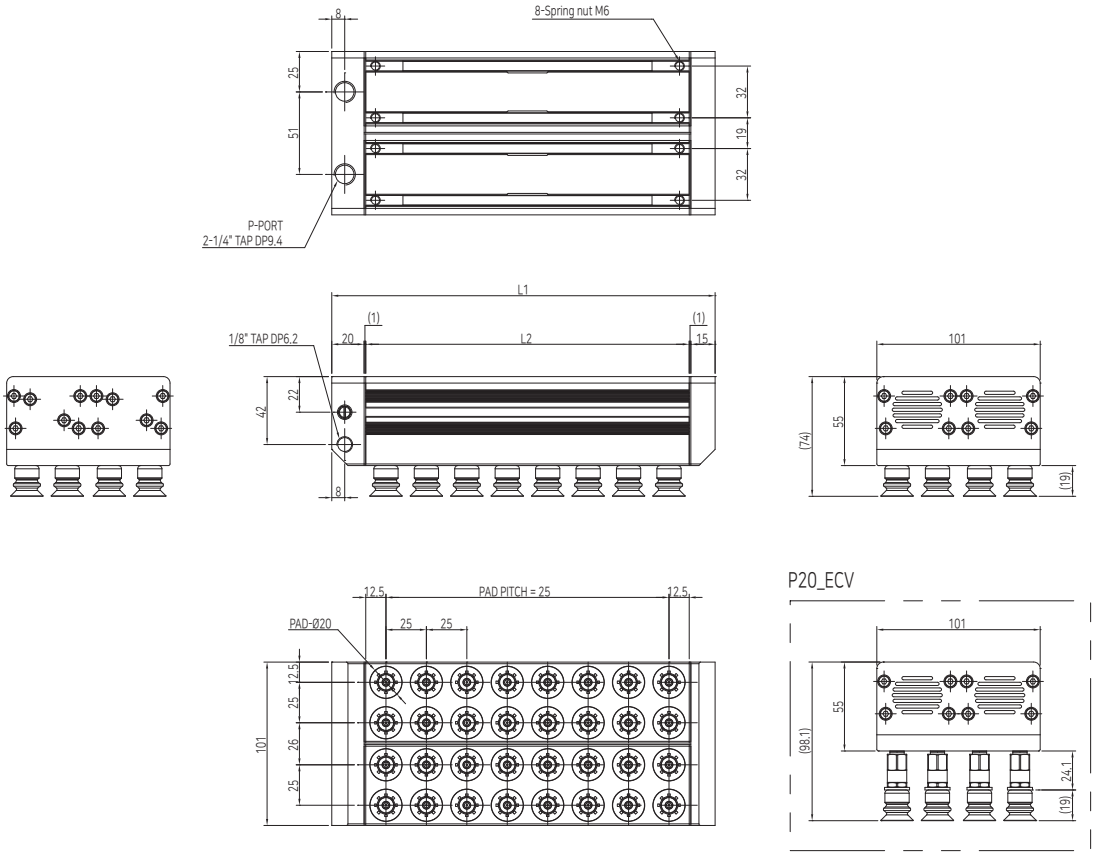

Code	L1	L2	Pad (Ø20)	Weight (kg)
VLG20D-P4L-20B( )-162	237	200	32	2.1
VLG20D-P4L-20B( )-ECV-162	237	200	32	2.5
VLG30D-P4L-20B( )-162	337	300	48	2.8
VLG30D-P4L-20B( )-ECV-162	337	300	48	3.4
VLG40D-P4L-20B( )-162	437	400	64	3.5
VLG40D-P4L-20B( )-ECV-162	437	400	64	4.4

Dimension(mm)

VLG□D-P4L-20B( )-□-164

※ Pad Type
Dual st500~800

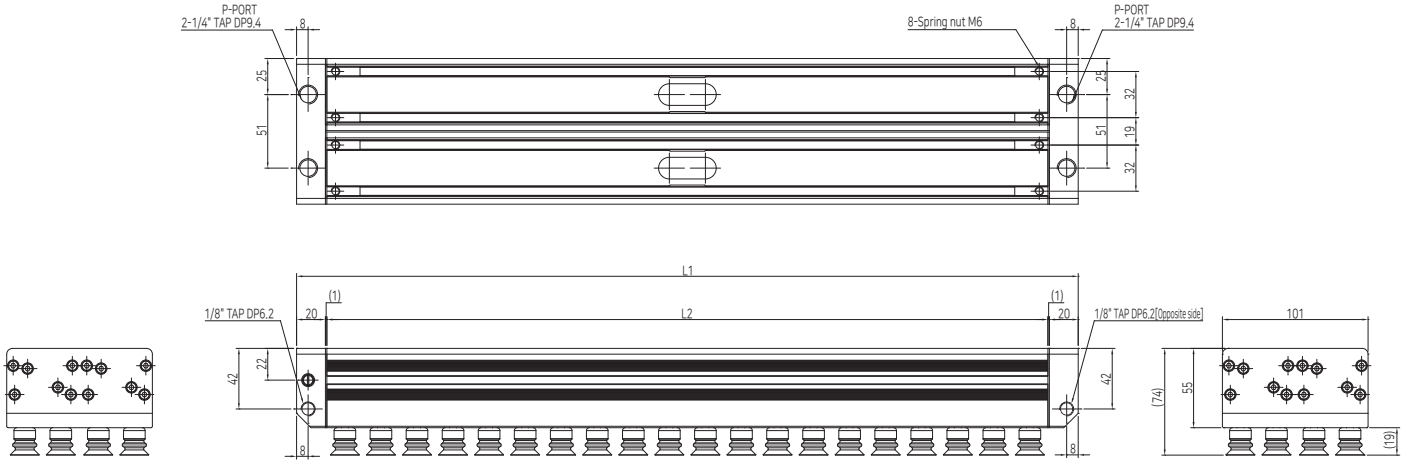

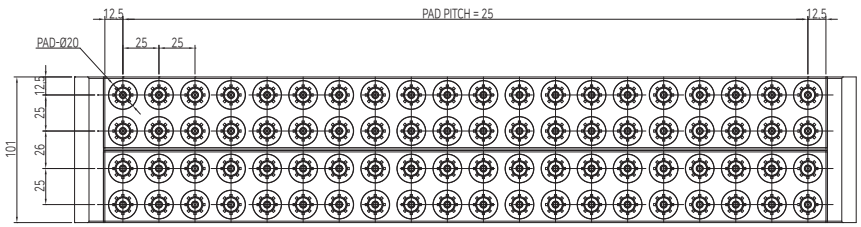

P20_ECV

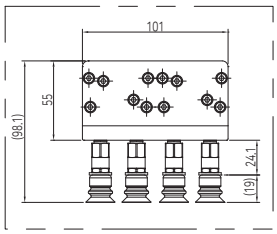

Code	L1	L2	Pad (Ø20)	Weight (kg)
VLG50D-P4L-20B( )-164	542	500	80	4.5
VLG50D-P4L-20B( )-ECV-164	542	500	80	5.6
VLG60D-P4L-20B( )-164	642	600	96	5.2
VLG60D-P4L-20B( )-ECV-164	642	600	96	6.5
VLG70D-P4L-20B( )-164	742	700	112	5.3
VLG70D-P4L-20B( )-ECV-164	742	700	112	7.4
VLG80D-P4L-20B( )-164	842	800	128	6.6
VLG80D-P4L-20B( )-ECV-164	842	800	128	8.3

Dimension(mm)

VLG□S-P2L-25B( )-□-161

※ Pad Type
Single st200~400

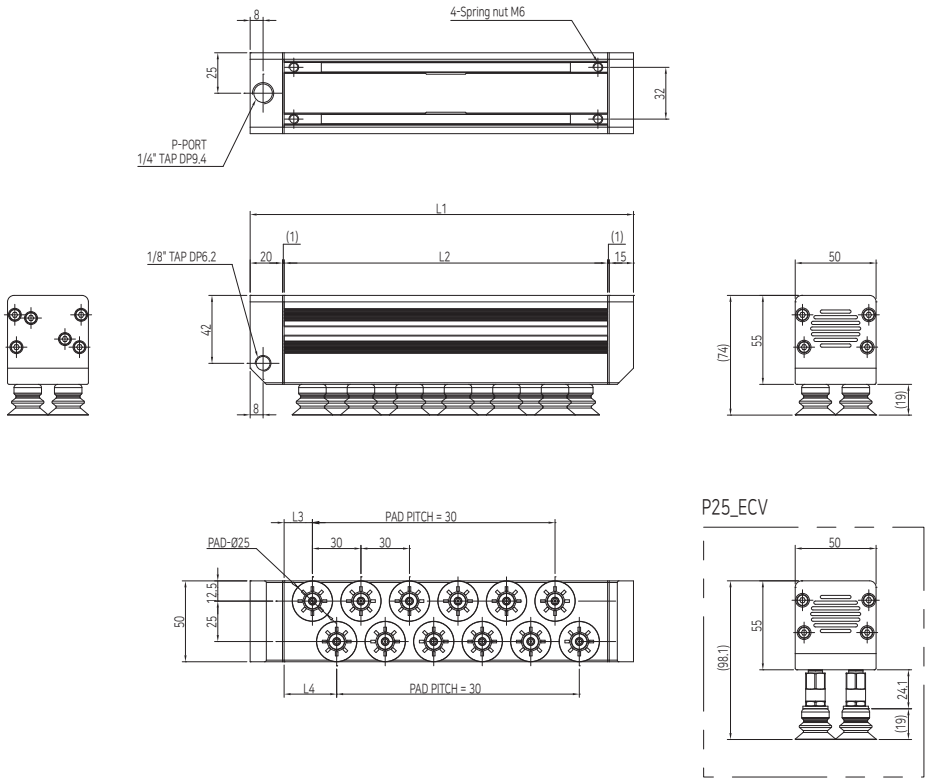

Code	L1	L2	L3	L4	Pad (Ø25)	Weight (kg)
VLG20S-P2L-25B( )-161	237	200	17.5	32.5	12	1.0
VLG20S-P2L-25B( )-ECV-161	237	200	17.5	32.5	12	1.2
VLG30S-P2L-25B( )-161	337	300	15	30	19	1.4
VLG30S-P2L-25B( )-ECV-161	337	300	15	30	19	1.6
VLG40S-P2L-25B( )-161	437	400	20	35	25	1.8
VLG40S-P2L-25B( )-ECV-161	437	400	20	35	25	2.1

Dimension(mm)

VLG□S-P2L-25B( )-□-162

※ Pad Type
Single st500~800

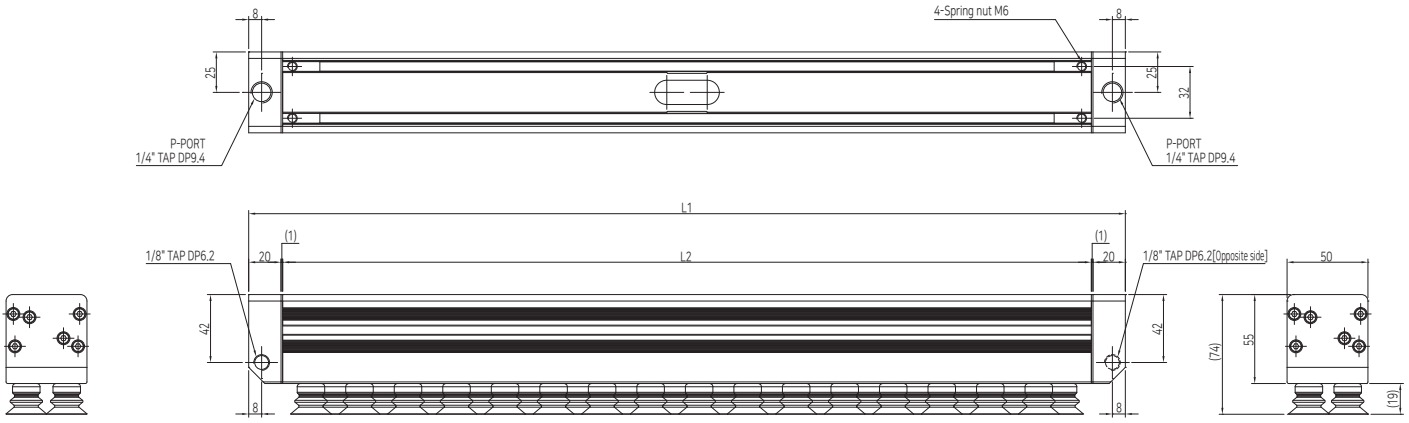

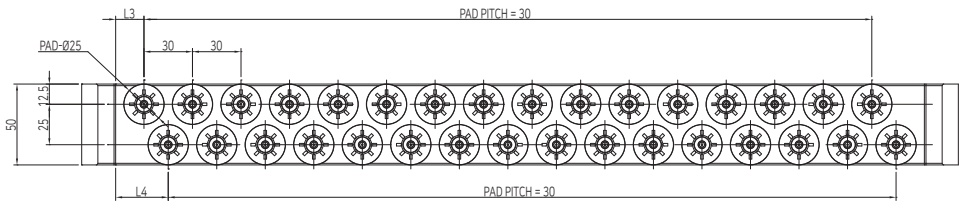

P25_ECV

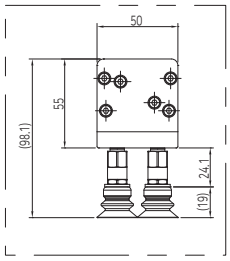

Code	L1	L2	L3	L4	Pad (Ø25)	Weight (kg)
VLG50S-P2L-25B( )-162	542	500	17.5	32.5	32	2.3
VLG50S-P2L-25B( )-ECV-162	542	500	17.5	32.5	32	2.7
VLG60S-P2L-25B( )-162	642	600	15	30	39	2.6
VLG60S-P2L-25B( )-ECV-162	642	600	15	30	39	3.1
VLG70S-P2L-25B( )-162	742	700	20	35	45	3.0
VLG70S-P2L-25B( )-ECV-162	742	700	20	35	45	3.5
VLG80S-P2L-25B( )-162	842	800	17.5	32.5	52	3.3
VLG80S-P2L-25B( )-ECV-162	842	800	17.5	32.5	52	4.0

Dimension(mm)

VLG□D-P4L-25B( )-□-162

※ Pad Type
Dual st200~400

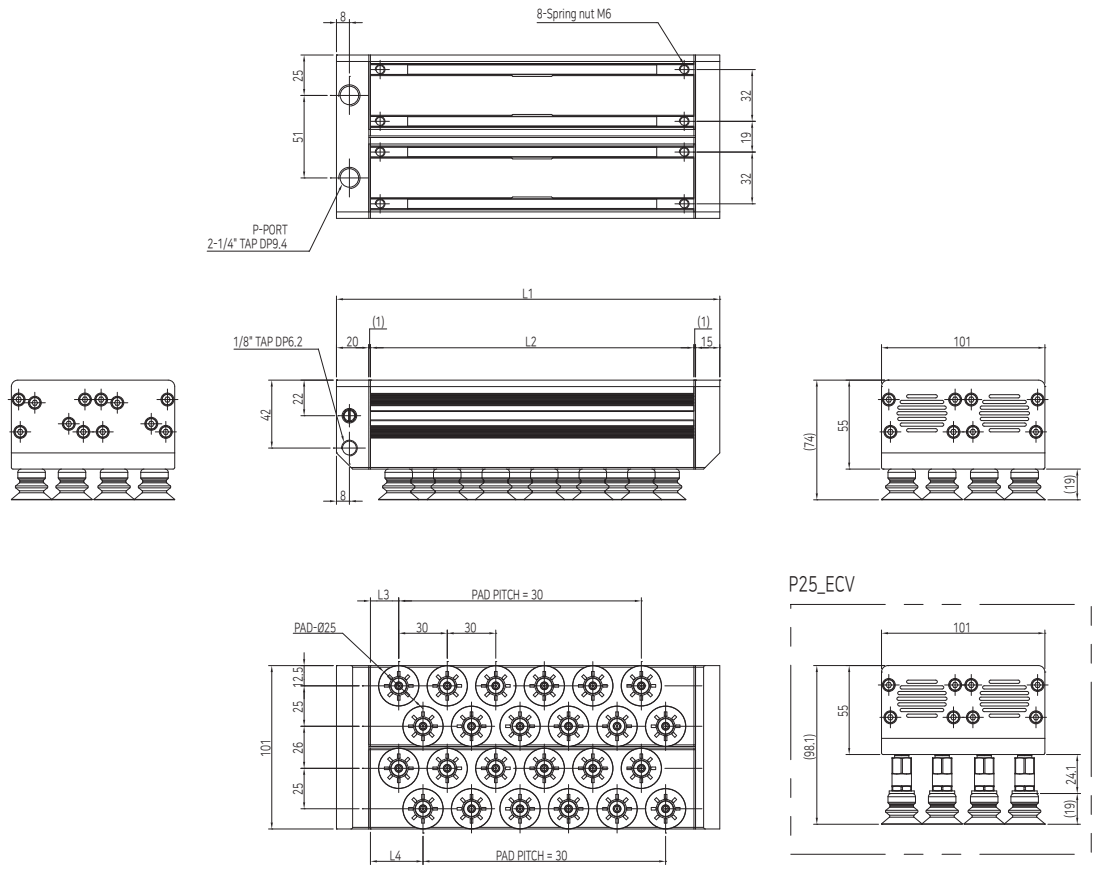

Code	L1	L2	L3	L4	Pad (Ø25)	Weight (kg)
VLG20D-P4L-25B( )-162	237	200	17.5	32.5	24	2.1
VLG20D-P4L-25B( )-ECV-162	237	200	17.5	32.5	24	2.4
VLG30D-P4L-25B( )-162	337	300	15	30	38	2.7
VLG30D-P4L-25B( )-ECV-162	337	300	15	30	38	3.2
VLG40D-P4L-25B( )-162	437	400	20	35	50	3.5
VLG40D-P4L-25B( )-ECV-162	437	400	20	35	50	4.1

Dimension(mm)

VLG□D-P4L-25B( )-□-164

※ Pad Type
Dual st500~800

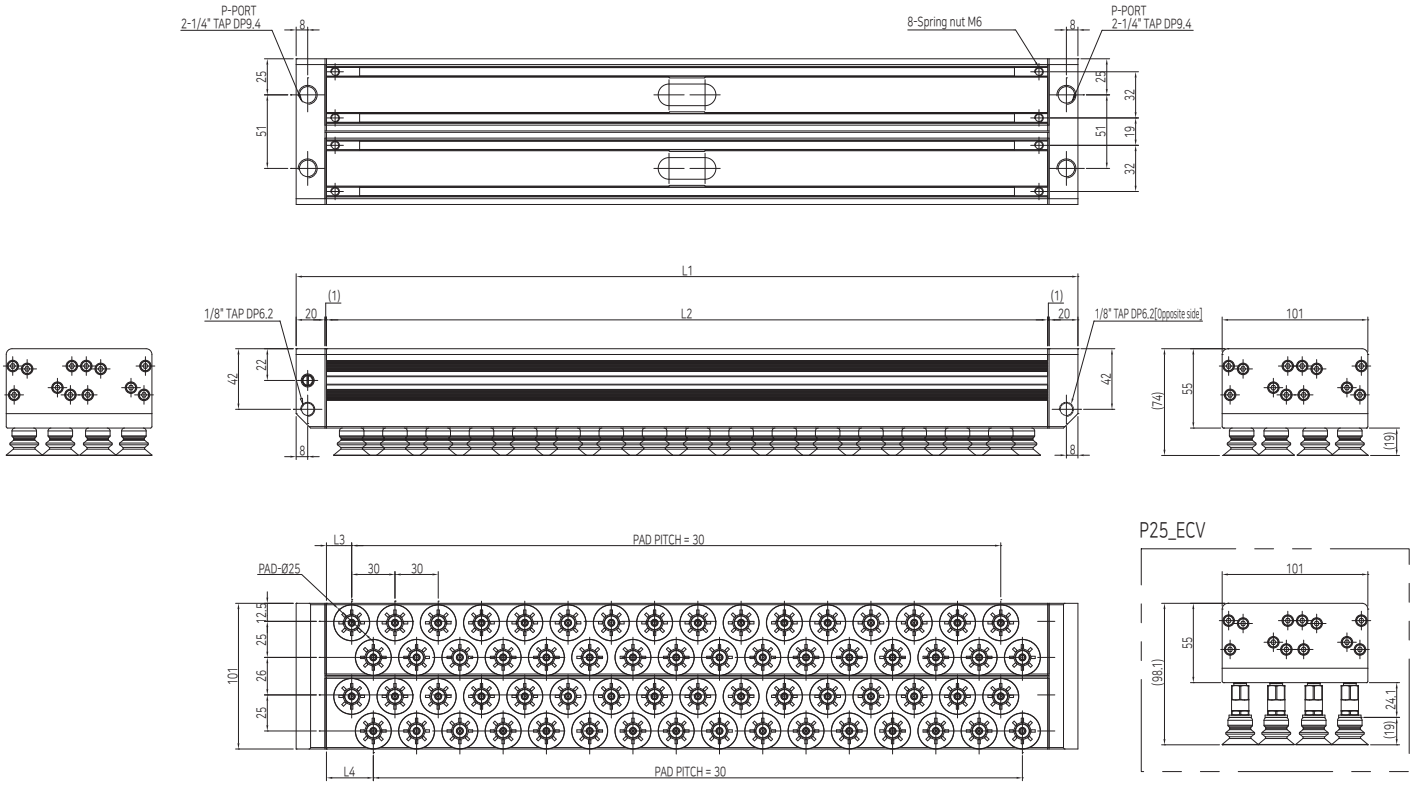

Code	L1	L2	L3	L4	Pad (Ø25)	Weight (kg)
VLG50D-P4L-25B( )-164	542	500	17.5	32.5	64	4.5
VLG50D-P4L-25B( )-ECV-164	542	500	17.5	32.5	64	5.3
VLG60D-P4L-25B( )-164	642	600	15	30	78	5.2
VLG60D-P4L-25B( )-ECV-164	642	600	15	30	78	6.2
VLG70D-P4L-25B( )-164	742	700	20	35	90	5.9
VLG70D-P4L-25B( )-ECV-164	742	700	20	35	90	7.1
VLG80D-P4L-25B( )-164	842	800	17.5	32.5	104	6.6
VLG80D-P4L-25B( )-ECV-164	842	800	17.5	32.5	104	8.0

Dimension(mm)

VLG□S-P1L-30B( )-□-161

※ Pad Type
Single st200~400

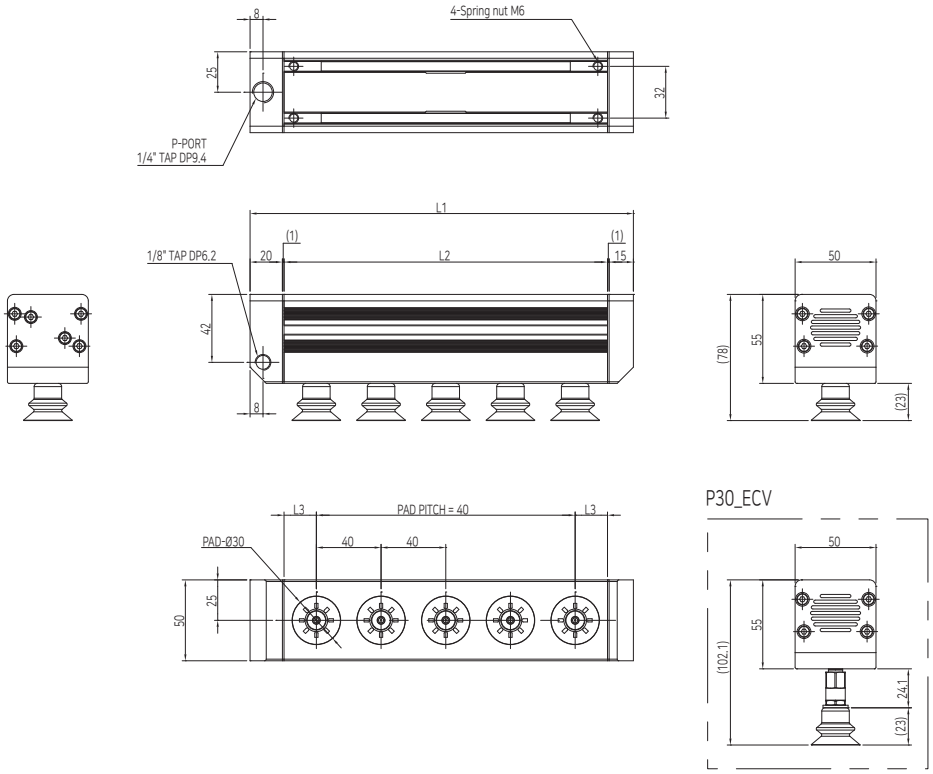

Code	L1	L2	L3	Pad (Ø30)	Weight (kg)
VLG20S-P1L-30B( )-161	237	200	20	5	1.0
VLG20S-P1L-30B( )-ECV-161	237	200	20	5	1.1
VLG30S-P1L-30B( )-161	337	300	30	7	1.3
VLG30S-P1L-30B( )-ECV-161	337	300	30	7	1.4
VLG40S-P1L-30B( )-161	437	400	20	10	1.7
VLG40S-P1L-30B( )-ECV-161	437	400	20	10	1.8

Dimension(mm)

VLG□S-P1L-30B( )-□-162

※ Pad Type
Single st500~800

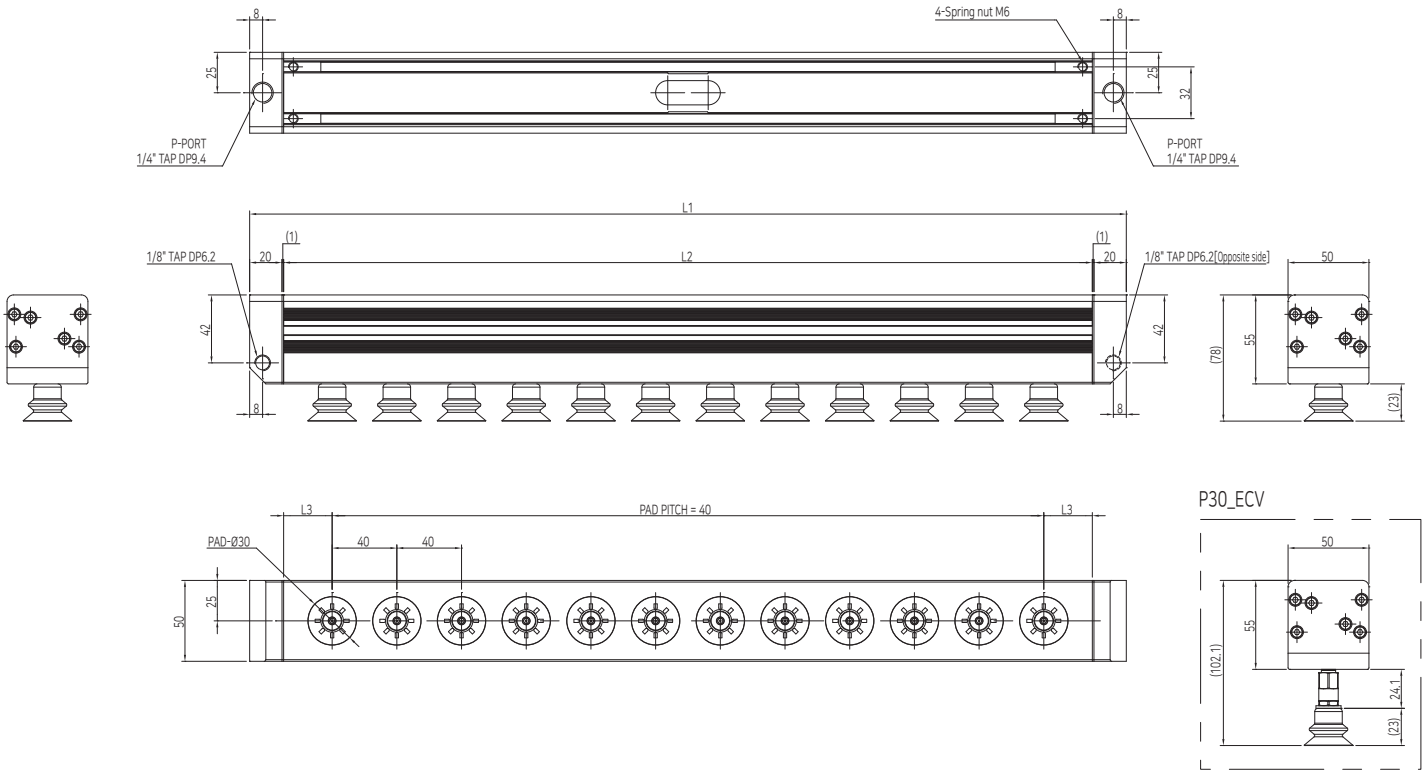

Code	L1	L2	L3	Pad (Ø30)	Weight (kg)
VLG50S-P1L-30B( )-162	542	500	30	12	2.2
VLG50S-P1L-30B( )-ECV-162	542	500	30	12	2.3
VLG60S-P1L-30B( )-162	642	600	20	15	2.5
VLG60S-P1L-30B( )-ECV-162	642	600	20	15	2.7
VLG70S-P1L-30B( )-162	742	700	30	17	2.8
VLG70S-P1L-30B( )-ECV-162	742	700	30	17	3.1
VLG80S-P1L-30B( )-162	842	800	20	20	3.2
VLG80S-P1L-30B( )-ECV-162	842	800	20	20	3.4

Dimension(mm)

VLG□D-P2L-30B( )-□-162

※ Pad Type
Dual st200~400

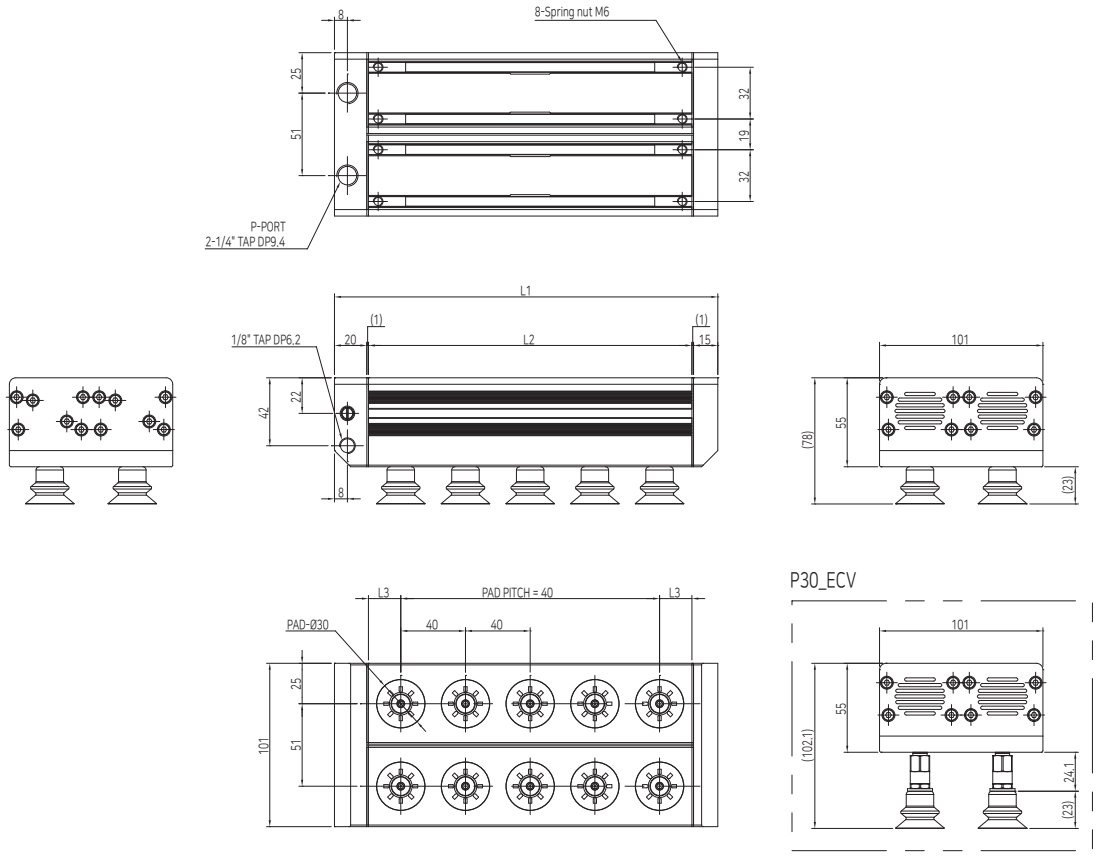

Code	L1	L2	L3	Pad (Ø30)	Weight (kg)
VLG20D-P2L-30B( )-162	237	200	20	10	2.0
VLG20D-P2L-30B( )-ECV-162	237	200	20	10	2.2
VLG30D-P2L-30B( )-162	337	300	30	14	2.6
VLG30D-P2L-30B( )-ECV-162	337	300	30	14	2.8
VLG40D-P2L-30B( )-162	437	400	20	20	3.4
VLG40D-P2L-30B( )-ECV-162	437	400	20	20	3.6

Dimension(mm)

VLG□D-P2L-30B( )-□-164

※ Pad Type
Dual st500~800

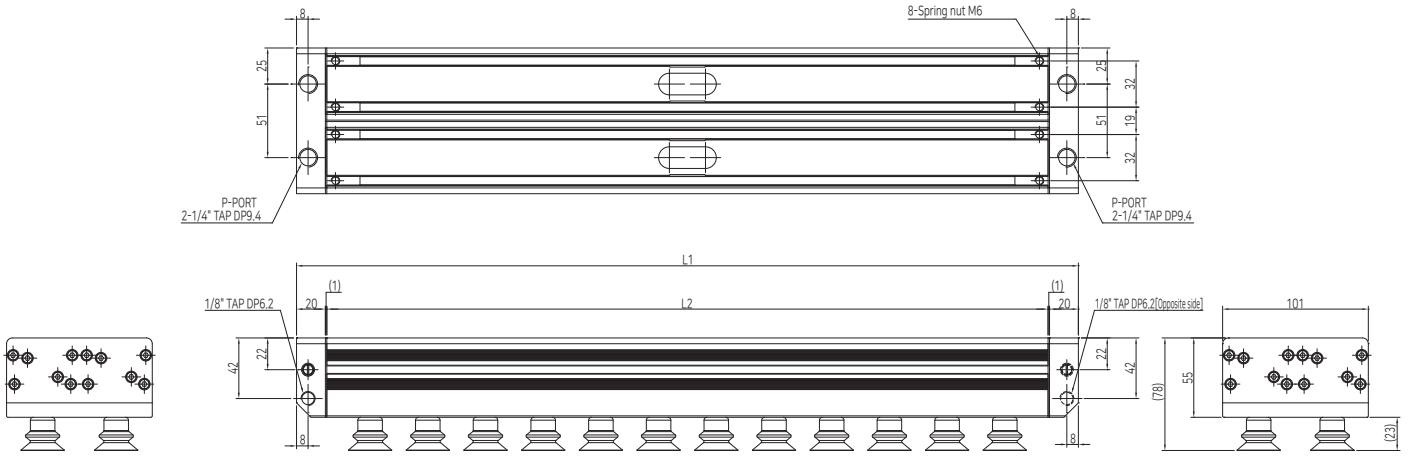

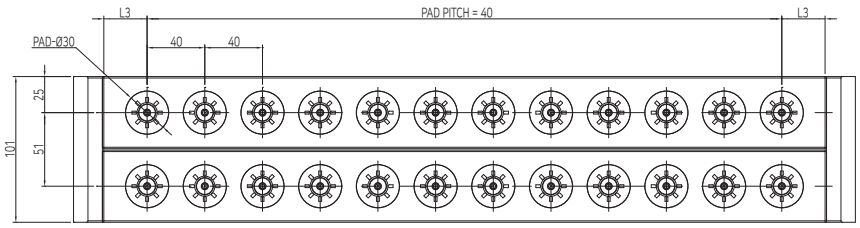

P30_ECV

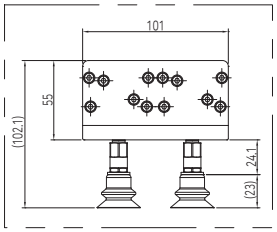

Code	L1	L2	L3	Pad (Ø30)	Weight (kg)
VLG50D-P2L-30B( )-164	542	500	30	24	4.3
VLG50D-P2L-30B( )-ECV-164	542	500	30	24	4.7
VLG60D-P2L-30B( )-164	642	600	20	30	5.0
VLG60D-P2L-30B( )-ECV-164	642	600	20	30	5.4
VLG70D-P2L-30B( )-164	742	700	30	34	5.7
VLG70D-P2L-30B( )-ECV-164	742	700	30	34	6.1
VLG80D-P2L-30B( )-164	842	800	20	40	6.4
VLG80D-P2L-30B( )-ECV-164	842	800	20	40	6.9

Dimension(mm)

VLG□S-P1L-40B( )-□-161

※ Pad Type
Single st200~400

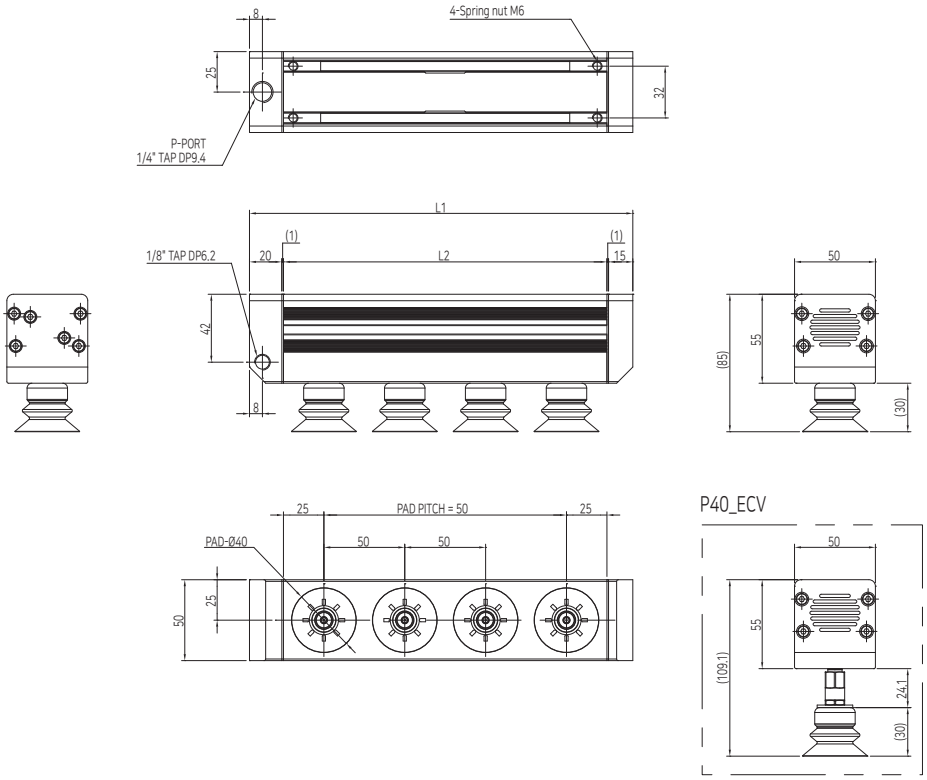

Code	L1	L2	Pad (Ø40)	Weight (kg)
VLG20S-P1L-40B( )-161	237	200	4	1.0
VLG20S-P1L-40B( )-ECV-161	237	200	4	1.1
VLG30S-P1L-40B( )-161	337	300	6	1.3
VLG30S-P1L-40B( )-ECV-161	337	300	6	1.4
VLG40S-P1L-40B( )-161	437	400	8	1.7
VLG40S-P1L-40B( )-ECV-161	437	400	8	1.8

Dimension(mm)

VLG□S-P1L-40B( )-□-162

※ Pad Type
Single st500~800

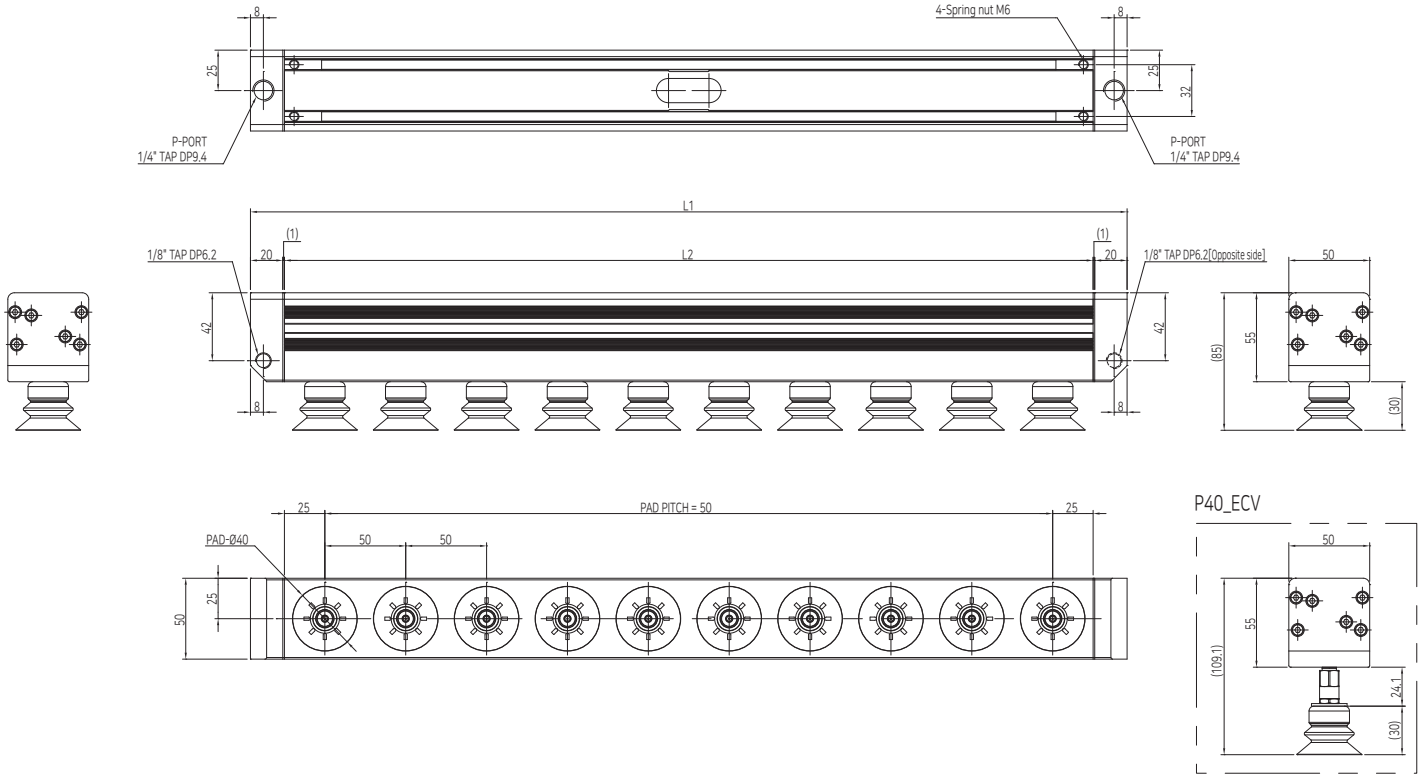

Code	L1	L2	Pad (Ø40)	Weight (kg)
VLG50S-P1L-40B( )-162	542	500	10	2.1
VLG50S-P1L-40B( )-ECV-162	542	500	10	2.3
VLG60S-P1L-40B( )-162	642	600	12	2.5
VLG60S-P1L-40B( )-ECV-162	642	600	12	2.7
VLG70S-P1L-40B( )-162	742	700	14	2.8
VLG70S-P1L-40B( )-ECV-162	742	700	14	3.0
VLG80S-P1L-40B( )-162	842	800	16	3.2
VLG80S-P1L-40B( )-ECV-162	842	800	16	3.4

Dimension(mm)

VLG□D-P2L-40B( )-□-162

※ Pad Type
Dual st200~400

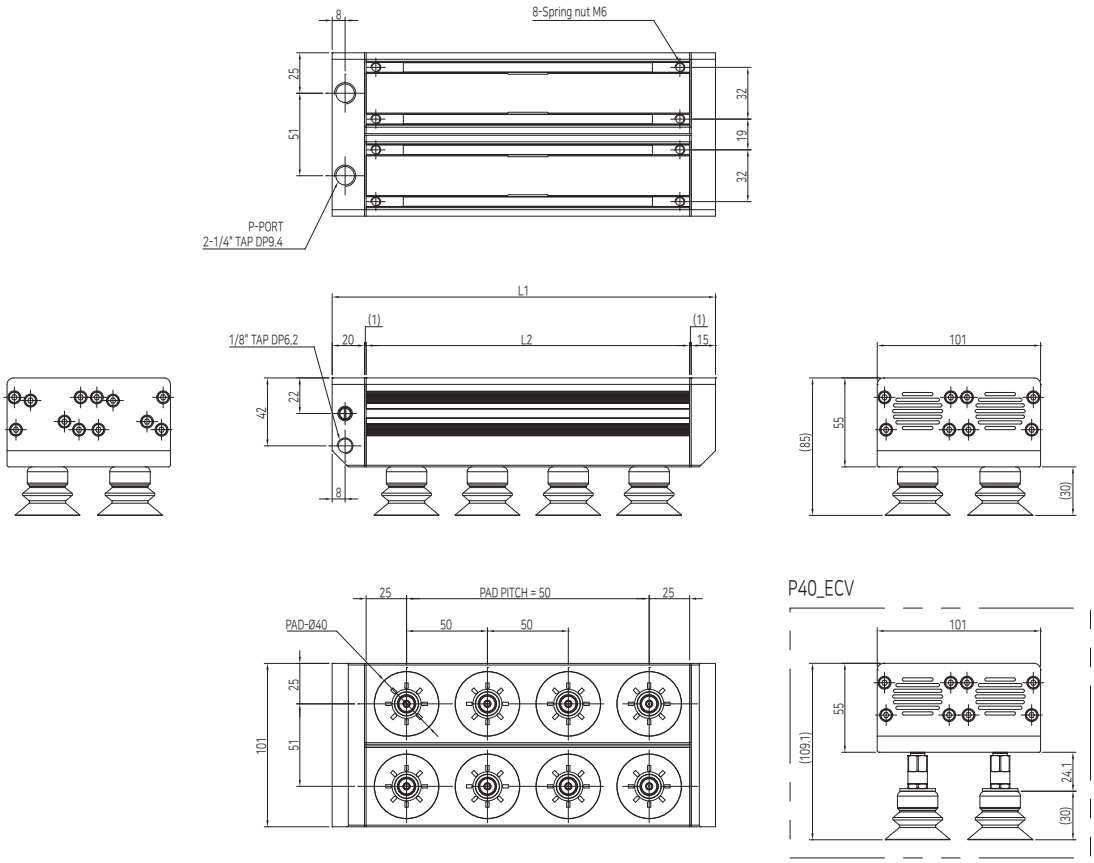

Code	L1	L2	Pad (Ø40)	Weight (kg)
VLG20D-P2L-40B( )-162	237	200	8	2.0
VLG20D-P2L-40B( )-ECV-162	237	200	8	2.1
VLG30D-P2L-40B( )-162	337	300	12	2.6
VLG30D-P2L-40B( )-ECV-162	337	300	12	2.8
VLG40D-P2L-40B( )-162	437	400	16	3.4
VLG40D-P2L-40B( )-ECV-162	437	400	16	3.6

Dimension(mm)

VLG□D-P2L-40B( )-□-164

※ Pad Type
Dual st500~800

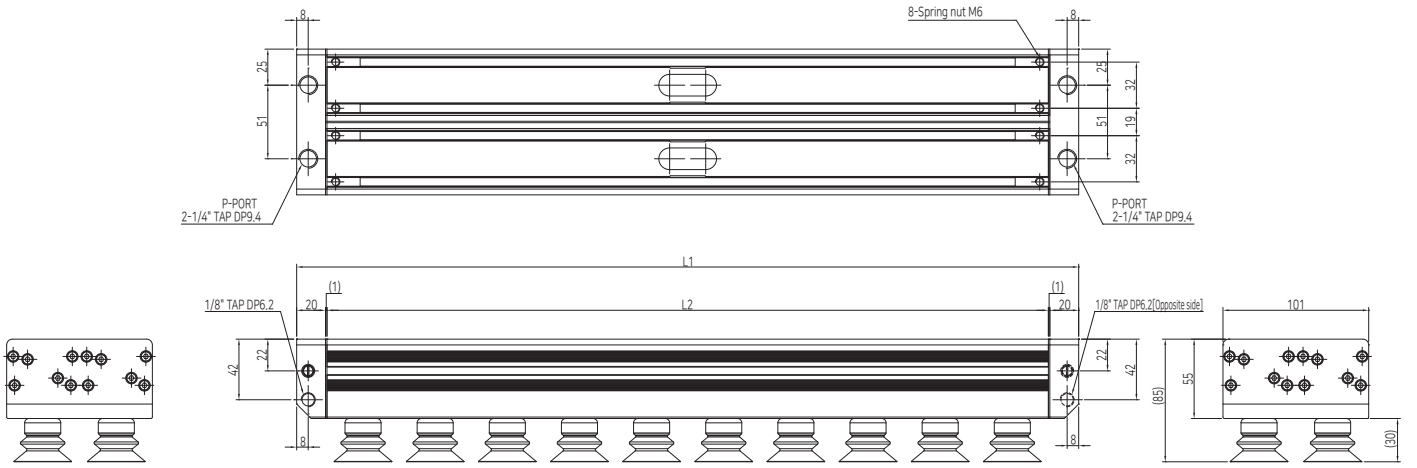

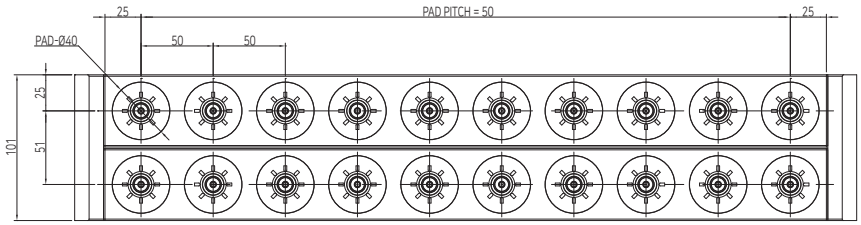

P40_ECV

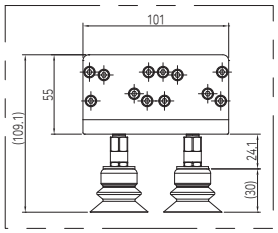

Code	L1	L2	Pad (Ø40)	Weight (kg)
VLG50D-P2L-40B( )-164	542	500	20	4.3
VLG50D-P2L-40B( )-ECV-164	542	500	20	4.6
VLG60D-P2L-40B( )-164	642	600	24	5.0
VLG60D-P2L-40B( )-ECV-164	642	600	24	5.3
VLG70D-P2L-40B( )-164	742	700	28	5.7
VLG70D-P2L-40B( )-ECV-164	742	700	28	6.0
VLG80D-P2L-40B( )-164	842	800	32	6.3
VLG80D-P2L-40B( )-ECV-164	842	800	32	6.7

Options

How the check valve operates

Operate only where the work adsorbs

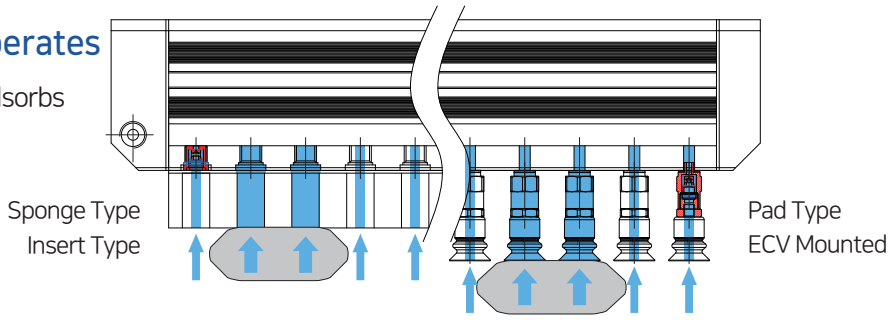

① Check Valve(STS)

Components	
	Ø7x1 O-Ring
	M8 Body
	Spring
	Valve
	Stopper(Press in)

② SPONGE

Type	Material
PAD SPONGE	EPDM

① ECV

Type	Pad size
ECVM4-FM4	Ø15mm
	Ø20mm
ECVM6-FM6	Ø25mm
	Ø30mm
	Ø40mm

① PAD

Pad type	Pad size
VP15B( )	Ø15mm
VP20B( )	Ø20mm
VP25B( )	Ø25mm
VP30B( )	Ø30mm
VP40B( )	Ø40mm

Install

Mounted M6 Insert nut

Mounted position is adjustable

Defalut 4 EA mounted, additional installation available

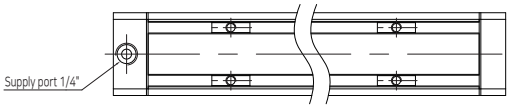

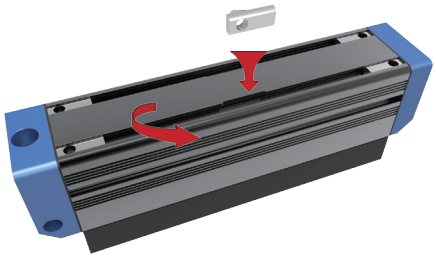

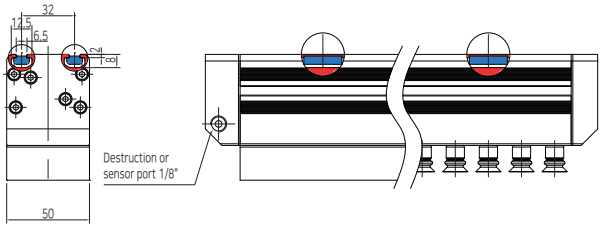

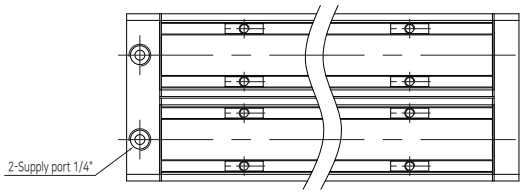

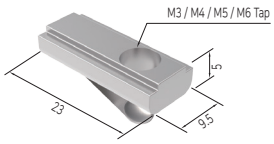

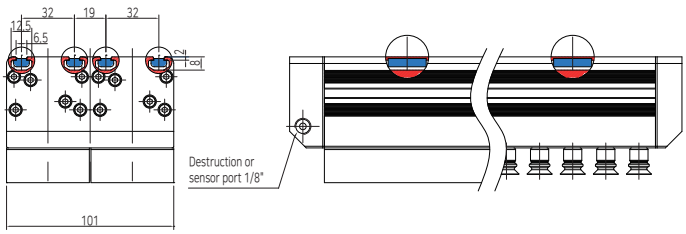

Theoretical adsorption rate

SPONGE Single type

STROKE	P:Vacuum rate(-kPa)	10	20	30	40	50	60	70	80	Unit
ST200	Theoretical adsorption rate 1/4	3.94	7.87	11.81	15.75	19.68	23.62	27.56	31.49	[N]
		0.40	0.80	1.21	1.61	2.01	2.41	2.81	3.21	[kgf]
	Theoretical adsorption rate 1/8	1.97	3.94	5.90	7.87	9.84	11.81	13.78	15.75	[N]
		0.20	0.40	0.60	0.80	1.00	1.21	1.41	1.61	[kgf]
ST300	Theoretical adsorption rate 1/4	5.90	11.81	17.71	23.62	29.52	35.43	41.33	47.24	[N]
		0.60	1.21	1.81	2.41	3.01	3.62	4.22	4.82	[kgf]
	Theoretical adsorption rate 1/8	2.95	5.90	8.86	11.81	14.76	17.71	20.67	23.62	[N]
		0.30	0.60	0.90	1.21	1.51	1.81	2.11	2.41	[kgf]
ST400	Theoretical adsorption rate 1/4	7.87	15.75	23.62	31.49	39.37	47.24	55.11	62.99	[N]
		0.80	1.61	2.41	3.21	4.02	4.82	5.62	6.43	[kgf]
	Theoretical adsorption rate 1/8	3.94	7.87	11.81	15.75	19.68	23.62	27.56	31.49	[N]
		0.40	0.80	1.21	1.61	2.01	2.41	2.81	3.21	[kgf]
ST500	Theoretical adsorption rate 1/4	9.84	19.68	29.52	39.37	49.21	59.05	68.89	78.73	[N]
		1.00	2.01	3.01	4.02	5.02	6.03	7.03	8.03	[kgf]
	Theoretical adsorption rate 1/8	4.92	9.84	14.76	19.68	24.60	29.52	34.45	39.37	[N]
		0.50	1.00	1.51	2.01	2.51	3.01	3.51	4.02	[kgf]
ST600	Theoretical adsorption rate 1/4	11.81	23.62	35.43	47.24	59.05	70.86	82.67	94.48	[N]
		1.21	2.41	3.62	4.82	6.03	7.23	8.44	9.64	[kgf]
	Theoretical adsorption rate 1/8	5.90	11.81	17.71	23.62	29.52	35.43	41.33	47.24	[N]
		0.60	1.21	1.81	2.41	3.01	3.62	4.22	4.82	[kgf]
ST700	Theoretical adsorption rate 1/4	13.78	27.56	41.33	55.11	68.89	82.67	96.45	110.23	[N]
		1.41	2.81	4.22	5.62	7.03	8.44	9.84	11.25	[kgf]
	Theoretical adsorption rate 1/8	6.89	13.78	20.67	27.56	34.45	41.33	48.22	55.11	[N]
		0.70	1.41	2.11	2.81	3.51	4.22	4.92	5.62	[kgf]
ST800	Theoretical adsorption rate 1/4	15.75	31.49	47.24	62.99	78.73	94.48	110.23	125.97	[N]
		1.61	3.21	4.82	6.43	8.03	9.64	11.25	12.85	[kgf]
	Theoretical adsorption rate 1/8	7.87	15.75	23.62	31.49	39.37	47.24	55.11	62.99	[N]
		0.80	1.61	2.41	3.21	4.02	4.82	5.62	6.43	[kgf]

※ Theoretical adsorption rate on a fully enclosed, rigid, stable surface.

SPONGE Dual type

STROKE	P:Vacuum rate(-kPa)	10	20	30	40	50	60	70	80	Unit
ST200	Theoretical adsorption rate 1/4	7.87	15.75	23.62	31.49	39.37	47.24	55.11	62.99	[N]
		0.80	1.61	2.41	3.21	4.02	4.82	5.62	6.43	[kgf]
	Theoretical adsorption rate 1/8	3.94	7.87	11.81	15.75	19.68	23.62	27.56	31.49	[N]
		0.40	0.80	1.21	1.61	2.01	2.41	2.81	3.21	[kgf]
ST300	Theoretical adsorption rate 1/4	11.81	23.62	35.43	47.24	59.05	70.86	82.67	94.48	[N]
		1.21	2.41	3.62	4.82	6.03	7.23	8.44	9.64	[kgf]
	Theoretical adsorption rate 1/8	5.90	11.81	17.71	23.62	29.52	35.43	41.33	47.24	[N]
		0.60	1.21	1.81	2.41	3.01	3.62	4.22	4.82	[kgf]
ST400	Theoretical adsorption rate 1/4	15.75	31.49	47.24	62.99	78.73	94.48	110.23	125.97	[N]
		1.61	3.21	4.82	6.43	8.03	9.64	11.25	12.85	[kgf]
	Theoretical adsorption rate 1/8	7.87	15.75	23.62	31.49	39.37	47.24	55.11	62.99	[N]
		0.80	1.61	2.41	3.21	4.02	4.82	5.62	6.43	[kgf]
ST500	Theoretical adsorption rate 1/4	19.68	39.37	59.05	78.73	98.42	118.10	137.78	157.47	[N]
		2.01	4.02	6.03	8.03	10.04	12.05	14.06	16.07	[kgf]
	Theoretical adsorption rate 1/8	9.84	19.68	29.52	39.37	49.21	59.05	68.89	78.73	[N]
		1.00	2.01	3.01	4.02	5.02	6.03	7.03	8.03	[kgf]
ST600	Theoretical adsorption rate 1/4	23.62	47.24	70.86	94.48	118.10	141.72	165.34	188.96	[N]
		2.41	4.82	7.23	9.64	12.05	14.46	16.87	19.28	[kgf]
	Theoretical adsorption rate 1/8	11.81	23.62	35.43	47.24	59.05	70.86	82.67	94.48	[N]
		1.21	2.41	3.62	4.82	6.03	7.23	8.44	9.64	[kgf]
ST700	Theoretical adsorption rate 1/4	27.56	55.11	82.67	110.23	137.78	165.34	192.90	220.45	[N]
		2.81	5.62	8.44	11.25	14.06	16.87	19.68	22.50	[kgf]
	Theoretical adsorption rate 1/8	13.78	27.56	41.33	55.11	68.89	82.67	96.45	110.23	[N]
		1.41	2.81	4.22	5.62	7.03	8.44	9.84	11.25	[kgf]
ST800	Theoretical adsorption rate 1/4	31.49	62.99	94.48	125.97	157.47	188.96	220.45	251.95	[N]
		3.21	6.43	9.64	12.85	16.07	19.28	22.50	25.71	[kgf]
	Theoretical adsorption rate 1/8	15.75	31.49	47.24	62.99	78.73	94.48	110.23	125.97	[N]
		1.61	3.21	4.82	6.43	8.03	9.64	11.25	12.85	[kgf]

※ Theoretical adsorption rate on a fully enclosed, rigid, stable surface.

Theoretical adsorption rate

PAD Ø15
Single type

STROKE	P:Vacuum rate(-kPa)	10	20	30	40	50	60	70	80	Unit
ST200	Theoretical adsorption rate 1/4	8.86	17.71	26.57	35.42	44.28	53.14	61.99	70.85	[N]
		0.90	1.81	2.71	3.61	4.52	5.42	6.33	7.23	[kgf]
	Theoretical adsorption rate 1/8	4.43	8.86	13.28	17.71	22.14	26.57	31.00	35.42	[N]
		0.45	0.90	1.36	1.81	2.26	2.71	3.16	3.61	[kgf]
ST300	Theoretical adsorption rate 1/4	13.28	26.57	39.85	53.14	66.42	79.71	92.99	106.27	[N]
		1.36	2.71	4.07	5.42	6.78	8.13	9.49	10.84	[kgf]
	Theoretical adsorption rate 1/8	6.64	13.28	19.93	26.57	33.21	39.85	46.50	53.14	[N]
		0.68	1.36	2.03	2.71	3.39	4.07	4.74	5.42	[kgf]
ST400	Theoretical adsorption rate 1/4	17.71	35.42	53.14	70.85	88.56	106.27	123.99	141.70	[N]
		1.81	3.61	5.42	7.23	9.04	10.84	12.65	14.46	[kgf]
	Theoretical adsorption rate 1/8	8.86	17.71	26.57	35.42	44.28	53.14	61.99	70.85	[N]
		0.90	1.81	2.71	3.61	4.52	5.42	6.33	7.23	[kgf]
ST500	Theoretical adsorption rate 1/4	22.14	44.28	66.42	88.56	110.70	132.84	154.98	177.12	[N]
		2.26	4.52	6.78	9.04	11.30	13.56	15.81	18.07	[kgf]
	Theoretical adsorption rate 1/8	11.07	22.14	33.21	44.28	55.35	66.42	77.49	88.56	[N]
		1.13	2.26	3.39	4.52	5.65	6.78	7.91	9.04	[kgf]
ST600	Theoretical adsorption rate 1/4	26.57	53.14	79.71	106.27	132.84	159.41	185.98	212.55	[N]
		2.71	5.42	8.13	10.84	13.56	16.27	18.98	21.69	[kgf]
	Theoretical adsorption rate 1/8	13.28	26.57	39.85	53.14	66.42	79.71	92.99	106.27	[N]
		1.36	2.71	4.07	5.42	6.78	8.13	9.49	10.84	[kgf]
ST700	Theoretical adsorption rate 1/4	31.00	61.99	92.99	123.99	154.98	185.98	216.98	247.97	[N]
		3.16	6.33	9.49	12.65	15.81	18.98	22.14	25.30	[kgf]
	Theoretical adsorption rate 1/8	15.50	31.00	46.50	61.99	77.49	92.99	108.49	123.99	[N]
		1.58	3.16	4.74	6.33	7.91	9.49	11.07	12.65	[kgf]
ST800	Theoretical adsorption rate 1/4	35.42	70.85	106.27	141.70	177.12	212.55	247.97	283.40	[N]
		3.61	7.23	10.84	14.46	18.07	21.69	25.30	28.92	[kgf]
	Theoretical adsorption rate 1/8	17.71	35.42	53.14	70.85	88.56	106.27	123.99	141.70	[N]
		1.81	3.61	5.42	7.23	9.04	10.84	12.65	14.46	[kgf]

※ Theoretical adsorption rate on a fully enclosed, rigid, stable surface.

PAD Ø15
Dual type

STROKE	P:Vacuum rate(-kPa)	10	20	30	40	50	60	70	80	Unit
ST200	Theoretical adsorption rate 1/4	17.71	35.42	53.14	70.85	88.56	106.27	123.99	141.70	[N]
		1.81	3.61	5.42	7.23	9.04	10.84	12.65	14.46	[kgf]
	Theoretical adsorption rate 1/8	8.86	17.71	26.57	35.42	44.28	53.14	61.99	70.85	[N]
		0.90	1.81	2.71	3.61	4.52	5.42	6.33	7.23	[kgf]
ST300	Theoretical adsorption rate 1/4	26.57	53.14	79.71	106.27	132.84	159.41	185.98	212.55	[N]
		2.71	5.42	8.13	10.84	13.56	16.27	18.98	21.69	[kgf]
	Theoretical adsorption rate 1/8	13.28	26.57	39.85	53.14	66.42	79.71	92.99	106.27	[N]
		1.36	2.71	4.07	5.42	6.78	8.13	9.49	10.84	[kgf]
ST400	Theoretical adsorption rate 1/4	35.42	70.85	106.27	141.70	177.12	212.55	247.97	283.40	[N]
		3.61	7.23	10.84	14.46	18.07	21.69	25.30	28.92	[kgf]
	Theoretical adsorption rate 1/8	17.71	35.42	53.14	70.85	88.56	106.27	123.99	141.70	[N]
		1.81	3.61	5.42	7.23	9.04	10.84	12.65	14.46	[kgf]
ST500	Theoretical adsorption rate 1/4	44.28	88.56	132.84	177.12	221.41	265.69	309.97	354.25	[N]
		4.52	9.04	13.56	18.07	22.59	27.11	31.63	36.15	[kgf]
	Theoretical adsorption rate 1/8	22.14	44.28	66.42	88.56	110.70	132.84	154.98	177.12	[N]
		2.26	4.52	6.78	9.04	11.30	13.56	15.81	18.07	[kgf]
ST600	Theoretical adsorption rate 1/4	53.14	106.27	159.41	212.55	265.69	318.82	371.96	425.10	[N]
		5.42	10.84	16.27	21.69	27.11	32.53	37.96	43.38	[kgf]
	Theoretical adsorption rate 1/8	26.57	53.14	79.71	106.27	132.84	159.41	185.98	212.55	[N]
		2.71	5.42	8.13	10.84	13.56	16.27	18.98	21.69	[kgf]
ST700	Theoretical adsorption rate 1/4	61.99	123.99	185.98	247.97	309.97	371.96	433.96	495.95	[N]
		6.33	12.65	18.98	25.30	31.63	37.96	44.28	50.61	[kgf]
	Theoretical adsorption rate 1/8	31.00	61.99	92.99	123.99	154.98	185.98	216.98	247.97	[N]
		3.16	6.33	9.49	12.65	15.81	18.98	22.14	25.30	[kgf]
ST800	Theoretical adsorption rate 1/4	70.85	141.70	212.55	283.40	354.25	425.10	495.95	566.80	[N]
		7.23	14.46	21.69	28.92	36.15	43.38	50.61	57.84	[kgf]
	Theoretical adsorption rate 1/8	35.42	70.85	106.27	141.70	177.12	212.55	247.97	283.40	[N]
		3.61	7.23	10.84	14.46	18.07	21.69	25.30	28.92	[kgf]

※ Theoretical adsorption rate on a fully enclosed, rigid, stable surface.

Theoretical adsorption rate

PAD Ø20 Single type

STROKE	P:Vacuum rate(-kPa)	10	20	30	40	50	60	70	80	Unit
ST200	Theoretical adsorption rate 1/4	12.60	25.19	37.79	50.39	62.99	75.58	88.18	100.78	[N]
		1.29	2.57	3.86	5.14	6.43	7.71	9.00	10.28	[kgf]
	Theoretical adsorption rate 1/8	6.30	12.60	18.90	25.19	31.49	37.79	44.09	50.39	[N]
		0.64	1.29	1.93	2.57	3.21	3.86	4.50	5.14	[kgf]
ST300	Theoretical adsorption rate 1/4	18.90	37.79	56.69	75.58	94.48	113.38	132.27	151.17	[N]
		1.93	3.86	5.78	7.71	9.64	11.57	13.50	15.43	[kgf]
	Theoretical adsorption rate 1/8	9.45	18.90	28.34	37.79	47.24	56.69	66.14	75.58	[N]
		0.96	1.93	2.89	3.86	4.82	5.78	6.75	7.71	[kgf]
ST400	Theoretical adsorption rate 1/4	25.19	50.39	75.58	100.78	125.97	151.17	176.36	201.56	[N]
		2.57	5.14	7.71	10.28	12.85	15.43	18.00	20.57	[kgf]
	Theoretical adsorption rate 1/8	12.60	25.19	37.79	50.39	62.99	75.58	88.18	100.78	[N]
		1.29	2.57	3.86	5.14	6.43	7.71	9.00	10.28	[kgf]
ST500	Theoretical adsorption rate 1/4	31.49	62.99	94.48	125.97	157.47	188.96	220.45	251.95	[N]
		3.21	6.43	9.64	12.85	16.07	19.28	22.50	25.71	[kgf]
	Theoretical adsorption rate 1/8	15.75	31.49	47.24	62.99	78.73	94.48	110.23	125.97	[N]
		1.61	3.21	4.82	6.43	8.03	9.64	11.25	12.85	[kgf]
ST600	Theoretical adsorption rate 1/4	37.79	75.58	113.38	151.17	188.96	226.75	264.54	302.34	[N]
		3.86	7.71	11.57	15.43	19.28	23.14	26.99	30.85	[kgf]
	Theoretical adsorption rate 1/8	18.90	37.79	56.69	75.58	94.48	113.38	132.27	151.17	[N]
		1.93	3.86	5.78	7.71	9.64	11.57	13.50	15.43	[kgf]
ST700	Theoretical adsorption rate 1/4	44.09	88.18	132.27	176.36	220.45	264.54	308.63	352.72	[N]
		4.50	9.00	13.50	18.00	22.50	26.99	31.49	35.99	[kgf]
	Theoretical adsorption rate 1/8	22.05	44.09	66.14	88.18	110.23	132.27	154.32	176.36	[N]
		2.25	4.50	6.75	9.00	11.25	13.50	15.75	18.00	[kgf]
ST800	Theoretical adsorption rate 1/4	50.39	100.78	151.17	201.56	251.95	302.34	352.72	403.11	[N]
		5.14	10.28	15.43	20.57	25.71	30.85	35.99	41.13	[kgf]
	Theoretical adsorption rate 1/8	25.19	50.39	75.58	100.78	125.97	151.17	176.36	201.56	[N]
		2.57	5.14	7.71	10.28	12.85	15.43	18.00	20.57	[kgf]

※ Theoretical adsorption rate on a fully enclosed, rigid, stable surface.

PAD Ø20 Dual type

STROKE	P:Vacuum rate(-kPa)	10	20	30	40	50	60	70	80	Unit
ST200	Theoretical adsorption rate 1/4	25.19	50.39	75.58	100.78	125.97	151.17	176.36	201.56	[N]
		2.57	5.14	7.71	10.28	12.85	15.43	18.00	20.57	[kgf]
	Theoretical adsorption rate 1/8	12.60	25.19	37.79	50.39	62.99	75.58	88.18	100.78	[N]
		1.29	2.57	3.86	5.14	6.43	7.71	9.00	10.28	[kgf]
ST300	Theoretical adsorption rate 1/4	37.79	75.58	113.38	151.17	188.96	226.75	264.54	302.34	[N]
		3.86	7.71	11.57	15.43	19.28	23.14	26.99	30.85	[kgf]
	Theoretical adsorption rate 1/8	18.90	37.79	56.69	75.58	94.48	113.38	132.27	151.17	[N]
		1.93	3.86	5.78	7.71	9.64	11.57	13.50	15.43	[kgf]
ST400	Theoretical adsorption rate 1/4	50.39	100.78	151.17	201.56	251.95	302.34	352.72	403.11	[N]
		5.14	10.28	15.43	20.57	25.71	30.85	35.99	41.13	[kgf]
	Theoretical adsorption rate 1/8	25.19	50.39	75.58	100.78	125.97	151.17	176.36	201.56	[N]
		2.57	5.14	7.71	10.28	12.85	15.43	18.00	20.57	[kgf]
ST500	Theoretical adsorption rate 1/4	62.99	125.97	188.96	251.95	314.93	377.92	440.91	503.89	[N]
		6.43	12.85	19.28	25.71	32.14	38.56	44.99	51.42	[kgf]
	Theoretical adsorption rate 1/8	31.49	62.99	94.48	125.97	157.47	188.96	220.45	251.95	[N]
		3.21	6.43	9.64	12.85	16.07	19.28	22.50	25.71	[kgf]
ST600	Theoretical adsorption rate 1/4	75.58	151.17	226.75	302.34	377.92	453.50	529.09	604.67	[N]
		7.71	15.43	23.14	30.85	38.56	46.28	53.99	61.70	[kgf]
	Theoretical adsorption rate 1/8	37.79	75.58	113.38	151.17	188.96	226.75	264.54	302.34	[N]
		3.86	7.71	11.57	15.43	19.28	23.14	26.99	30.85	[kgf]
ST700	Theoretical adsorption rate 1/4	88.18	176.36	264.54	352.72	440.91	529.09	617.27	705.45	[N]
		9.00	18.00	26.99	35.99	44.99	53.99	62.99	71.98	[kgf]
	Theoretical adsorption rate 1/8	44.09	88.18	132.27	176.36	220.45	264.54	308.63	352.72	[N]
		4.50	9.00	13.50	18.00	22.50	26.99	31.49	35.99	[kgf]
ST800	Theoretical adsorption rate 1/4	100.78	201.56	302.34	403.11	503.89	604.67	705.45	806.23	[N]
		10.28	20.57	30.85	41.13	51.42	61.70	71.98	82.27	[kgf]
	Theoretical adsorption rate 1/8	50.39	100.78	151.17	201.56	251.95	302.34	352.72	403.11	[N]
		5.14	10.28	15.43	20.57	25.71	30.85	35.99	41.13	[kgf]

※ Theoretical adsorption rate on a fully enclosed, rigid, stable surface.

Theoretical adsorption rate

PAD Ø25
Single type

STROKE	P:Vacuum rate(-kPa)	10	20	30	40	50	60	70	80	Unit
ST200	Theoretical adsorption rate 1/4	14.76	29.52	44.29	59.05	73.81	88.57	103.33	118.09	[N]
		1.51	3.01	4.52	6.03	7.53	9.04	10.54	12.05	[kgf]
	Theoretical adsorption rate 1/8	7.38	14.76	22.14	29.52	36.90	44.29	51.67	59.05	[N]
		0.75	1.51	2.26	3.01	3.77	4.52	5.27	6.03	[kgf]
ST300	Theoretical adsorption rate 1/4	23.37	46.75	70.12	93.49	116.86	140.24	163.61	186.98	[N]
		2.38	4.77	7.15	9.54	11.92	14.31	16.69	19.08	[kgf]
	Theoretical adsorption rate 1/8	11.69	23.37	35.06	46.75	58.43	70.12	81.80	93.49	[N]
		1.19	2.38	3.58	4.77	5.96	7.15	8.35	9.54	[kgf]
ST400	Theoretical adsorption rate 1/4	30.75	61.51	92.26	123.01	153.77	184.52	215.28	246.03	[N]
		3.14	6.28	9.41	12.55	15.69	18.83	21.97	25.10	[kgf]
	Theoretical adsorption rate 1/8	15.38	30.75	46.13	61.51	76.88	92.26	107.64	123.01	[N]
		1.57	3.14	4.71	6.28	7.85	9.41	10.98	12.55	[kgf]
ST500	Theoretical adsorption rate 1/4	39.36	78.73	118.09	157.46	196.82	236.19	275.55	314.92	[N]
		4.02	8.03	12.05	16.07	20.08	24.10	28.12	32.13	[kgf]
	Theoretical adsorption rate 1/8	19.68	39.36	59.05	78.73	98.41	118.09	137.78	157.46	[N]
		2.01	4.02	6.03	8.03	10.04	12.05	14.06	16.07	[kgf]
ST600	Theoretical adsorption rate 1/4	47.98	95.95	143.93	191.90	239.88	287.85	335.83	383.80	[N]
		4.90	9.79	14.69	19.58	24.48	29.37	34.27	39.16	[kgf]
	Theoretical adsorption rate 1/8	23.99	47.98	71.96	95.95	119.94	143.93	167.91	191.90	[N]
		2.45	4.90	7.34	9.79	12.24	14.69	17.13	19.58	[kgf]
ST700	Theoretical adsorption rate 1/4	55.36	110.71	166.07	221.43	276.78	332.14	387.50	442.85	[N]
		5.65	11.30	16.95	22.59	28.24	33.89	39.54	45.19	[kgf]
	Theoretical adsorption rate 1/8	27.68	55.36	83.03	110.71	138.39	166.07	193.75	221.43	[N]
		2.82	5.65	8.47	11.30	14.12	16.95	19.77	22.59	[kgf]
ST800	Theoretical adsorption rate 1/4	63.97	127.93	191.90	255.87	319.84	383.80	447.77	511.74	[N]
		6.53	13.05	19.58	26.11	32.64	39.16	45.69	52.22	[kgf]
	Theoretical adsorption rate 1/8	31.98	63.97	95.95	127.93	159.92	191.90	223.89	255.87	[N]
		3.26	6.53	9.79	13.05	16.32	19.58	22.85	26.11	[kgf]

※ Theoretical adsorption rate on a fully enclosed, rigid, stable surface.

PAD Ø25
Dual type

STROKE	P:Vacuum rate(-kPa)	10	20	30	40	50	60	70	80	Unit
ST200	Theoretical adsorption rate 1/4	29.52	59.05	88.57	118.09	147.62	177.14	206.66	236.19	[N]
		3.01	6.03	9.04	12.05	15.06	18.08	21.09	24.10	[kgf]
	Theoretical adsorption rate 1/8	14.76	29.52	44.29	59.05	73.81	88.57	103.33	118.09	[N]
		1.51	3.01	4.52	6.03	7.53	9.04	10.54	12.05	[kgf]
ST300	Theoretical adsorption rate 1/4	46.75	93.49	140.24	186.98	233.73	280.47	327.22	373.96	[N]
		4.77	9.54	14.31	19.08	23.85	28.62	33.39	38.16	[kgf]
	Theoretical adsorption rate 1/8	23.37	46.75	70.12	93.49	116.86	140.24	163.61	186.98	[N]
		2.38	4.77	7.15	9.54	11.92	14.31	16.69	19.08	[kgf]
ST400	Theoretical adsorption rate 1/4	61.51	123.01	184.52	246.03	307.54	369.04	430.55	492.06	[N]
		6.28	12.55	18.83	25.10	31.38	37.66	43.93	50.21	[kgf]
	Theoretical adsorption rate 1/8	30.75	61.51	92.26	123.01	153.77	184.52	215.28	246.03	[N]
		3.14	6.28	9.41	12.55	15.69	18.83	21.97	25.10	[kgf]
ST500	Theoretical adsorption rate 1/4	78.73	157.46	236.19	314.92	393.65	472.37	551.10	629.83	[N]
		8.03	16.07	24.10	32.13	40.17	48.20	56.24	64.27	[kgf]
	Theoretical adsorption rate 1/8	39.36	78.73	118.09	157.46	196.82	236.19	275.55	314.92	[N]
		4.02	8.03	12.05	16.07	20.08	24.10	28.12	32.13	[kgf]
ST600	Theoretical adsorption rate 1/4	95.95	191.90	287.85	383.80	479.76	575.71	671.66	767.61	[N]
		9.79	19.58	29.37	39.16	48.95	58.75	68.54	78.33	[kgf]
	Theoretical adsorption rate 1/8	47.98	95.95	143.93	191.90	239.88	287.85	335.83	383.80	[N]
		4.90	9.79	14.69	19.58	24.48	29.37	34.27	39.16	[kgf]
ST700	Theoretical adsorption rate 1/4	110.71	221.43	332.14	442.85	553.56	664.28	774.99	885.70	[N]
		11.30	22.59	33.89	45.19	56.46	67.78	79.08	90.38	[kgf]
	Theoretical adsorption rate 1/8	55.36	110.71	166.07	221.43	276.78	332.14	387.50	442.85	[N]
		5.65	11.30	16.95	22.59	28.24	33.89	39.54	45.19	[kgf]
ST800	Theoretical adsorption rate 1/4	127.93	255.87	383.80	511.74	639.67	767.61	895.54	1023.48	[N]
		13.05	26.11	39.16	52.22	65.27	78.33	91.38	104.44	[kgf]
	Theoretical adsorption rate 1/8	63.97	127.93	191.90	255.87	319.84	383.80	447.77	511.74	[N]
		6.53	13.05	19.58	26.11	32.64	39.16	45.69	52.22	[kgf]

※ Theoretical adsorption rate on a fully enclosed, rigid, stable surface.

Theoretical adsorption rate

PAD Ø30
Single type

STROKE	P:Vacuum rate(-kPa)	10	20	30	40	50	60	70	80	Unit
ST200	Theoretical adsorption rate 1/4	8.86	17.71	26.57	35.43	44.29	53.14	62.00	70.86	[N]
		0.90	1.81	2.71	3.62	4.52	5.42	6.33	7.23	[kgf]
	Theoretical adsorption rate 1/8	4.43	8.86	13.29	17.71	22.14	26.57	31.00	35.43	[N]
		0.45	0.90	1.36	1.81	2.26	2.71	3.16	3.62	[kgf]
ST300	Theoretical adsorption rate 1/4	12.40	24.80	37.20	49.60	62.00	74.40	86.80	99.20	[N]
		1.27	2.53	3.80	5.06	6.33	7.59	8.86	10.12	[kgf]
	Theoretical adsorption rate 1/8	6.20	12.40	18.60	24.80	31.00	37.20	43.40	49.60	[N]
		0.63	1.27	1.90	2.53	3.16	3.80	4.43	5.06	[kgf]
ST400	Theoretical adsorption rate 1/4	17.71	35.43	53.14	70.86	88.57	106.29	124.00	141.72	[N]
		1.81	3.62	5.42	7.23	9.04	10.85	12.65	14.46	[kgf]
	Theoretical adsorption rate 1/8	8.86	17.71	26.57	35.43	44.29	53.14	62.00	70.86	[N]
		0.90	1.81	2.71	3.62	4.52	5.42	6.33	7.23	[kgf]
ST500	Theoretical adsorption rate 1/4	21.26	42.52	63.77	85.03	106.29	127.55	148.81	170.06	[N]
		2.17	4.34	6.51	8.68	10.85	13.02	15.18	17.35	[kgf]
	Theoretical adsorption rate 1/8	10.63	21.26	31.89	42.52	53.14	63.77	74.40	85.03	[N]
		1.08	2.17	3.25	4.34	5.42	6.51	7.59	8.68	[kgf]
ST600	Theoretical adsorption rate 1/4	26.57	53.14	79.72	106.29	132.86	159.43	186.01	212.58	[N]
		2.71	5.42	8.13	10.85	13.56	16.27	18.98	21.69	[kgf]
	Theoretical adsorption rate 1/8	13.29	26.57	39.86	53.14	66.43	79.72	93.00	106.29	[N]
		1.36	2.71	4.07	5.42	6.78	8.13	9.49	10.85	[kgf]
ST700	Theoretical adsorption rate 1/4	30.12	60.23	90.35	120.46	150.58	180.69	210.81	240.92	[N]
		3.07	6.15	9.22	12.29	15.37	18.44	21.51	24.58	[kgf]
	Theoretical adsorption rate 1/8	15.06	30.12	45.17	60.23	75.29	90.35	105.40	120.46	[N]
		1.54	3.07	4.61	6.15	7.68	9.22	10.76	12.29	[kgf]
ST800	Theoretical adsorption rate 1/4	35.43	70.86	106.29	141.72	177.15	212.58	248.01	283.44	[N]
		3.62	7.23	10.85	14.46	18.08	21.69	25.31	28.92	[kgf]
	Theoretical adsorption rate 1/8	17.71	35.43	53.14	70.86	88.57	106.29	124.00	141.72	[N]
		1.81	3.62	5.42	7.23	9.04	10.85	12.65	14.46	[kgf]

※ Theoretical adsorption rate on a fully enclosed, rigid, stable surface.

PAD Ø30
Dual type

STROKE	P:Vacuum rate(-kPa)	10	20	30	40	50	60	70	80	Unit
ST200	Theoretical adsorption rate 1/4	17.71	35.43	53.14	70.86	147.62	106.29	124.00	141.72	[N]
		1.81	3.62	5.42	12.05	7.23	10.85	12.65	14.46	[kgf]
	Theoretical adsorption rate 1/8	8.86	17.71	26.57	59.05	35.43	53.14	62.00	70.86	[N]
		0.90	1.81	2.71	6.03	3.62	5.42	6.33	7.23	[kgf]
ST300	Theoretical adsorption rate 1/4	24.80	49.60	74.40	186.98	99.20	148.81	173.61	198.41	[N]
		2.53	5.06	7.59	19.08	10.12	15.18	17.71	20.25	[kgf]
	Theoretical adsorption rate 1/8	12.40	24.80	37.20	93.49	49.60	74.40	86.80	99.20	[N]
		1.27	2.53	3.80	9.54	5.06	7.59	8.86	10.12	[kgf]
ST400	Theoretical adsorption rate 1/4	35.43	70.86	106.29	246.03	141.72	212.58	248.01	283.44	[N]
		3.62	7.23	10.85	25.10	14.46	21.69	25.31	28.92	[kgf]
	Theoretical adsorption rate 1/8	17.71	35.43	53.14	123.01	70.86	106.29	124.00	141.72	[N]
		1.81	3.62	5.42	12.55	7.23	10.85	12.65	14.46	[kgf]
ST500	Theoretical adsorption rate 1/4	42.52	85.03	127.55	170.06	212.58	255.10	297.61	340.13	[N]
		4.34	8.68	13.02	17.35	21.69	26.03	30.37	34.71	[kgf]
	Theoretical adsorption rate 1/8	21.26	42.52	63.77	85.03	106.29	127.55	148.81	170.06	[N]
		2.17	4.34	6.51	8.68	10.85	13.02	15.18	17.35	[kgf]
ST600	Theoretical adsorption rate 1/4	53.14	106.29	159.43	212.58	265.72	318.87	372.01	425.16	[N]
		5.42	10.85	16.27	21.69	27.11	32.54	37.96	43.38	[kgf]
	Theoretical adsorption rate 1/8	26.57	53.14	79.72	106.29	132.86	159.43	186.01	212.58	[N]
		2.71	5.42	8.13	10.85	13.56	16.27	18.98	21.69	[kgf]
ST700	Theoretical adsorption rate 1/4	60.23	120.46	180.69	240.92	301.15	361.39	421.62	481.85	[N]
		6.15	12.29	18.44	24.58	30.73	36.88	43.02	49.17	[kgf]
	Theoretical adsorption rate 1/8	30.12	60.23	90.35	120.46	150.58	180.69	210.81	240.92	[N]
		3.07	6.15	9.22	12.29	15.37	18.44	21.51	24.58	[kgf]
ST800	Theoretical adsorption rate 1/4	70.86	141.72	212.58	283.44	354.30	425.16	496.02	566.88	[N]
		7.23	14.46	21.69	28.92	36.15	43.38	50.61	57.84	[kgf]
	Theoretical adsorption rate 1/8	35.43	70.86	106.29	141.72	177.15	212.58	248.01	283.44	[N]
		3.62	7.23	10.85	14.46	18.08	21.69	25.31	28.92	[kgf]

※ Theoretical adsorption rate on a fully enclosed, rigid, stable surface.

Theoretical adsorption rate

PAD Ø40
Single type

STROKE	P:Vacuum rate(-kPa)	10	20	30	40	50	60	70	80	Unit
ST200	Theoretical adsorption rate 1/4	12.60	25.19	37.79	50.39	62.99	75.58	88.18	100.78	[N]
		1.29	2.57	3.86	5.14	6.43	7.71	9.00	10.28	[kgf]
	Theoretical adsorption rate 1/8	6.30	12.60	18.90	25.19	31.49	37.79	44.09	50.39	[N]
		0.64	1.29	1.93	2.57	3.21	3.86	4.50	5.14	[kgf]
ST300	Theoretical adsorption rate 1/4	18.90	37.79	56.69	75.58	94.48	113.38	132.27	151.17	[N]
		1.93	3.86	5.78	7.71	9.64	11.57	13.50	15.43	[kgf]
	Theoretical adsorption rate 1/8	9.45	18.90	28.34	37.79	47.24	56.69	66.14	75.58	[N]
		0.96	1.93	2.89	3.86	4.82	5.78	6.75	7.71	[kgf]
ST400	Theoretical adsorption rate 1/4	25.19	50.39	75.58	100.78	125.97	151.17	176.36	201.56	[N]
		2.57	5.14	7.71	10.28	12.85	15.43	18.00	20.57	[kgf]
	Theoretical adsorption rate 1/8	12.60	25.19	37.79	50.39	62.99	75.58	88.18	100.78	[N]
		1.29	2.57	3.86	5.14	6.43	7.71	9.00	10.28	[kgf]
ST500	Theoretical adsorption rate 1/4	31.49	62.99	94.48	125.97	157.47	188.96	220.45	251.95	[N]
		3.21	6.43	9.64	12.85	16.07	19.28	22.50	25.71	[kgf]
	Theoretical adsorption rate 1/8	15.75	31.49	47.24	62.99	78.73	94.48	110.23	125.97	[N]
		1.61	3.21	4.82	6.43	8.03	9.64	11.25	12.85	[kgf]
ST600	Theoretical adsorption rate 1/4	37.79	75.58	113.38	151.17	188.96	226.75	264.54	302.34	[N]
		3.86	7.71	11.57	15.43	19.28	23.14	26.99	30.85	[kgf]
	Theoretical adsorption rate 1/8	18.90	37.79	56.69	75.58	94.48	113.38	132.27	151.17	[N]
		1.93	3.86	5.78	7.71	9.64	11.57	13.50	15.43	[kgf]
ST700	Theoretical adsorption rate 1/4	44.09	88.18	132.27	176.36	220.45	264.54	308.63	352.72	[N]
		4.50	9.00	13.50	18.00	22.50	26.99	31.49	35.99	[kgf]
	Theoretical adsorption rate 1/8	22.05	44.09	66.14	88.18	110.23	132.27	154.32	176.36	[N]
		2.25	4.50	6.75	9.00	11.25	13.50	15.75	18.00	[kgf]
ST800	Theoretical adsorption rate 1/4	50.39	100.78	151.17	201.56	251.95	302.34	352.72	403.11	[N]
		5.14	10.28	15.43	20.57	25.71	30.85	35.99	41.13	[kgf]
	Theoretical adsorption rate 1/8	25.19	50.39	75.58	100.78	125.97	151.17	176.36	201.56	[N]
		2.57	5.14	7.71	10.28	12.85	15.43	18.00	20.57	[kgf]

※ Theoretical adsorption rate on a fully enclosed, rigid, stable surface.

PAD Ø40
Dual type

STROKE	P:Vacuum rate(-kPa)	10	20	30	40	50	60	70	80	Unit
ST200	Theoretical adsorption rate 1/4	25.19	50.39	75.58	100.78	125.97	151.17	176.36	201.56	[N]
		2.57	5.14	7.71	10.28	12.85	15.43	18.00	20.57	[kgf]
	Theoretical adsorption rate 1/8	12.60	25.19	37.79	50.39	62.99	75.58	88.18	100.78	[N]
		1.29	2.57	3.86	5.14	6.43	7.71	9.00	10.28	[kgf]
ST300	Theoretical adsorption rate 1/4	37.79	75.58	113.38	151.17	188.96	226.75	264.54	302.34	[N]
		3.86	7.71	11.57	15.43	19.28	23.14	26.99	30.85	[kgf]
	Theoretical adsorption rate 1/8	18.90	37.79	56.69	75.58	94.48	113.38	132.27	151.17	[N]
		1.93	3.86	5.78	7.71	9.64	11.57	13.50	15.43	[kgf]
ST400	Theoretical adsorption rate 1/4	50.39	100.78	151.17	201.56	251.95	302.34	352.72	403.11	[N]
		5.14	10.28	15.43	20.57	25.71	30.85	35.99	41.13	[kgf]
	Theoretical adsorption rate 1/8	25.19	50.39	75.58	100.78	125.97	151.17	176.36	201.56	[N]
		2.57	5.14	7.71	10.28	12.85	15.43	18.00	20.57	[kgf]
ST500	Theoretical adsorption rate 1/4	62.99	125.97	188.96	251.95	314.93	377.92	440.91	503.89	[N]
		6.43	12.85	19.28	25.71	32.14	38.56	44.99	51.42	[kgf]
	Theoretical adsorption rate 1/8	31.49	62.99	94.48	125.97	157.47	188.96	220.45	251.95	[N]
		3.21	6.43	9.64	12.85	16.07	19.28	22.50	25.71	[kgf]
ST600	Theoretical adsorption rate 1/4	75.58	151.17	226.75	302.34	377.92	453.50	529.09	604.67	[N]
		7.71	15.43	23.14	30.85	38.56	46.28	53.99	61.70	[kgf]
	Theoretical adsorption rate 1/8	37.79	75.58	113.38	151.17	188.96	226.75	264.54	302.34	[N]
		3.86	7.71	11.57	15.43	19.28	23.14	26.99	30.85	[kgf]
ST700	Theoretical adsorption rate 1/4	88.18	176.36	264.54	352.72	440.91	529.09	617.27	705.45	[N]
		9.00	18.00	26.99	35.99	44.99	53.99	62.99	71.98	[kgf]
	Theoretical adsorption rate 1/8	44.09	88.18	132.27	176.36	220.45	264.54	308.63	352.72	[N]
		4.50	9.00	13.50	18.00	22.50	26.99	31.49	35.99	[kgf]
ST800	Theoretical adsorption rate 1/4	100.78	201.56	302.34	403.11	503.89	604.67	705.45	806.23	[N]
		10.28	20.57	30.85	41.13	51.42	61.70	71.98	82.27	[kgf]
	Theoretical adsorption rate 1/8	50.39	100.78	151.17	201.56	251.95	302.34	352.72	403.11	[N]
		5.14	10.28	15.43	20.57	25.71	30.85	35.99	41.13	[kgf]

※ Theoretical adsorption rate on a fully enclosed, rigid, stable surface.

⚠ Warning

1. Body frame withstand load of this product is 980N for VRG, 980N for VMG, and 350N for VLG single type, 700N for VLG dual type, including inertial force when returning. Make sure that body frame does not carry loads exceeding load carrying capacity, including weight of the gripper body and the inertial force when returning.
2. For screw of replacement, refer to the tightening torque and appropriate tool.
3. Please install that connection does not loosen. There is a risk of trouble if it becomes loose.
4. Please be careful not to pull or load the cables of air pipes or pressure sensors.
   Disconnection or breakage may occur, causing malfunction.
5. If it is considered dangerous because goods falls, prepare the prevention measure and implement safety measures.
6. Please be careful not to apply pressure above 0.1 MPa to the vacuum circuit.
   This product is not an explosion-proof, so there is a risk of damage to the body.
7. Please be careful to vacuum pressure reduction due to supply air and power problems.
   Please take safety measures as there is a risk of falling due to decrease in adsorption power.
8. Please do not block exhaust port of vacuum generator and increase exhaust resistance.
   No vacuum occurs or causes vacuum pressure problem.
9. Please proceed maintenance and inspection regularly.
   There is a risk of problem due to leakage, blockage and broken, cracks, deterioration, loose connection.
10. When returning work-piece with pad, please consider acceleration, impact, and wind pressure.
    There is a risk of work-piece leaving when it return.
11. VMG's coupling specification fixed orifice is recommended for use under all of following conditions.
    If you use product, please test it on device.
    ① Only for horizontal mounting
    ② Adsorb work-piece with multiple pads attached to vacuum gripper when returning
    ③ Use for work-piece where the load applied to the pad is evenly distributed.
    ④ Use for work-piece with a load of not more than 5.4 N per pad
    ⑤ When returning, use acceleration of 3 m/s less and return speed of 500 mm/sec less.
12. Use within rated pressure range specified in the pressure sensor specification.
    If supply pressure exceeds maximum internal pressure, there is a risk of product damage or malfunction.
13. Please power off when you connect pressure sensor.
14. Mis wiring causes sensor failure and malfunction.
15. Pressure sensor is not explosion-proof specification. Please never use in with flammable gas or explosive gas or dust.

⚠ Caution

1. Please inspect silencer elements and filter elements regularly.
   Blockage of elements can cause degradation or trouble.
2. Please understand how to replace elements.
3. Do not use it in areas where water droplets, oil droplets, or dust. Since it is not a spinning or dustproof specification, it may cause poor operation. When using it, take appropriate measures.
4. Please check precautions of fitting for using.
5. Please check precautions for digital display pressure sensors for using electronic pressure sensors.

6. Supply pressure before reaching vacuum rate of vacuum generator may produce a strange sound. This condition is unstable and noise becomes louder. Please reset the supply pressure as it may affect the sensor and cause trouble.
   ※ The strange sounds(boilings sound) is changed by influence of atmospheric pressure.
7. Select piping and equipment the effective cross-sectional area of the vacuum generator supply pressure side is based on the effective cross-sectional area three times the nozzle diameter cross-sectional area. Insufficient supply flow can cause performance degradation.
8. Please do not use rubricators.
9. Piping
   ① Compressed air contains a lot of drains (water, oxidizing oil, tar, foreign substances, etc.). Drain significantly degrades product performance, so dehumidify with an after cooler or dryer to improve air quality.
   ② Rust and foreign substances in piping cause product failure, malfunction, and deterioration of performance. Just before the compressed air supply, place a filter of 5 μm or less.
   ③ When piping, please clean foreign substances and drains in pipe. Foreign substances may penetrate peripherals and cause failure.
   ④ Piping is recommended to prevent twisting, pulling, loading, vibration, shock, etc. It can cause damage to fittings and dents, ruptures, and falls out of the tube.
   ⑤ Attach a protective cover in a sunny place.
   ⑥ For vacuum pump specifications, apply the vacuum-side piping as short as possible and the inner diameter as thick as possible. If the pipe is long and internal diameter is thin, it may be possible to delay response time and securing required suction flow . [Guarantee details]
10. When storing the product, keep pad surface free of load. Pad surface may be deformed, resulting in poor adsorption.
11. Make sure that robot is within range of operation and do not get tangled.
12. When replacing parts, use appropriate tools and refer to tightening torque.
    Also when connecting, temporarily check connection in diagonal first and complete.
13. When setting the pad diameter, quantity and adsorption position, refer to and understand theoretical adsorption power.
14. Product that use NBR for rubber materials in vacuum pads may cause cracks and defects due to ozone. Ozone antistatic air, clean type products, high voltage motor, etc. are present at higher concentrations than usual. Please prepare countermeasures in advance by changing rubber materials such as HNBR and FKM.
15. Appropriate pad rubber material or pad shape varies depending on the use, environment, and work type. Please refer to vacuum pad selection method and characteristics.
16. For pad replacement, please check vacuum pad composition diagram and refer to tightening torque below. Make sure that there is no tightening or loosening , using appropriate tool.

[Screwing torque]

Pad screw size	Tightening torque(N·m)
M4x0.7	0.5 ~ 1.0
M6x1	2 ~ 2.7

17. When replacing soft/soft bellows and flat type pad adapters, check vacuum pad composition and refer to tightening torque below. Make sure that there is no tightening or loosening, using appropriate tool.

[Screwing torque]

Pad screw size	Tightening torque(N·m)
M4x0.7	0.7 ~ 0.8
M6x1	1.5 ~ 2.0

18. Due to nature of rubber, vacuum pad may appear powdery on the surface with additives, etc.
    This is not an abnormal, and consider using it after considering that powdery substances may be attached to the workpiece or equipment.
19. When mounting plug body of coupling to socket body, press firmly until the plug body stops.
    Incomplete installation may cause a fallout. Also, lightly pull the plug body forward after installation.
    Please check it doesn't fallout.
20. Using pressure sensor in the same wiring path with high-voltage lines and power lines can cause noise malfunction. Plese use an individual wiring path.

⚠ Guarantee

If this product fails at our responsibility, we will promptly take any of the following actions:

① Free replacement for faulty products

② Free repair for faulty products

⚠ Indemnification

1. We are not responsible for any incidental or indirect damages caused by defective use of our products. (shutdown of manufacturing lines of factories/production facilities, suspension of business, loss of profits, personal injury, etc.)
2. If the reason of failure falls under any of following, it will be excluded from the scope of guarantee above:
   ① Natural disaster, a fire other than the company's responsibility, an act by a third party, intentional or negligence of customer.
   ② If used beyond specifications set forth in our catalogs and user manuals, or if used in any way other than described.
   ③ Modification and reorganization of structures, performance, and specifications not related to our company
   ④ Reasons that cannot be predicted by evaluation and countermeasures known at the time of delivery.
   ⑤ When using this product with your company's machinery/apparatus, if your company's machinery/apparatus has functions and structures that are not generally available.
3. For damages, caused by defects in our products, we will limit the price of our products that caused damage you purchased price. In addition, we are not responsible for any damages caused by the failure of this product other than our company's products.

PISCO

บริษัท นานดีอินเตอร์เทรด จำกัด
NANDEE INTER-TRADE CO., LTD.
314,316,318,320,322 ซอยจันทน์32 ถนนจันทน์ แขวงทุ่งวัดดอน เขตสาทร กทม. 10120

: 0-2675-8239
: @nandeeintertrade
: nandeeintertrade
: www.nandee.co.th
: marketing@nandee.co.th
sales@nandee.co.th