NITTO KOHKI

L01en-a

Linear-motor-driven Free Piston Pumps and other Pumps for various applications

AIR COMPRESSOR, VACUUM PUMP & LIQUID PUMP

GENERAL CATALOG

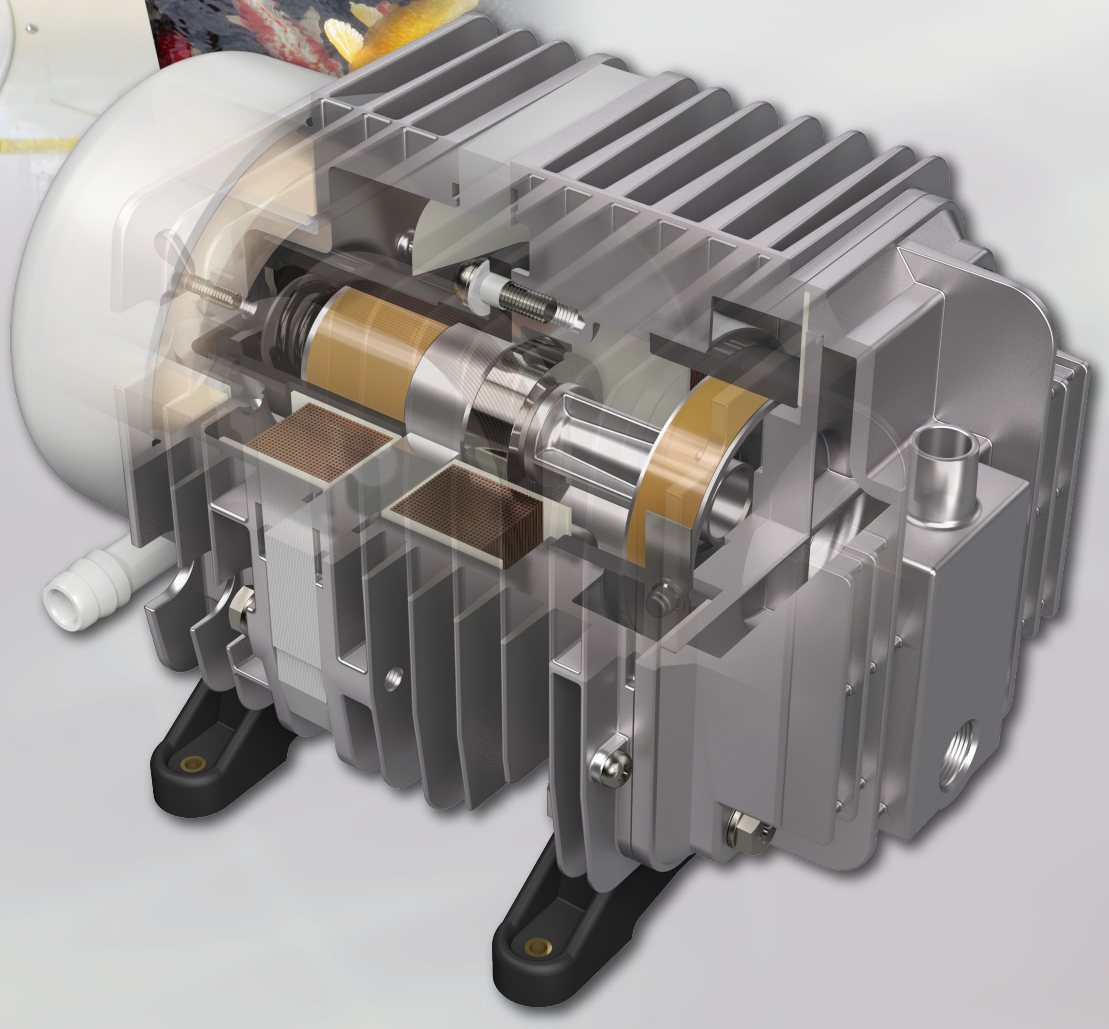

Our air compressors and vacuum pumps are unique products featuring a Linear-motor-driven Free Piston System. Nitto Kohki has made available a complete series of air compressors and vacuum pumps that incorporate this revolutionary mechanism. These are quite appropriate as air sources or vacuum units for various pneumatically operated equipment and apparatus in advanced industries.

Linear-motor-driven Free Piston Mechanism

The Electro-magnet and return spring alternately drive the piston inside the cylinder, the mechanical resonance of which is synchronized with the input current cycle.
In a single mechanism, the piston combines the functions of two normally independent devices; the pump and the motor.

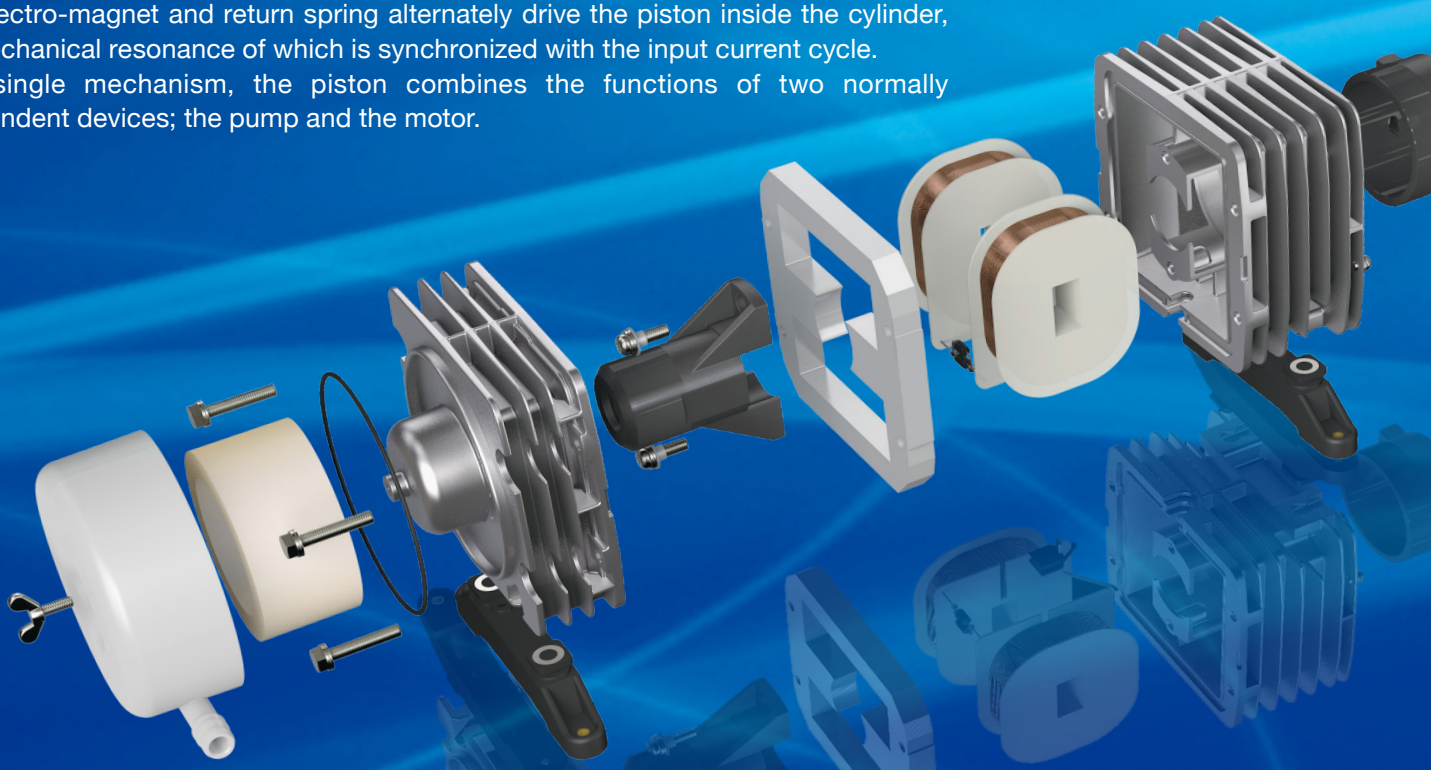

Operating Principle

*1) Incorporated in AC models *2) Incorporated in DC models

A silicon diode*1 in between the coils or inverter*2 converts the full-wave input current into half-rectified current. In turn this activates and deactivates the electro-magnet, producing a smooth mechanically resonating action.

A The energized electro-magnet attracts the piston, compresses the return spring, and draws air into the cylinder through the opened inlet valve.

AC Power(The effect of using a silicon diode) **DC Power**(The effect of using an inverter)

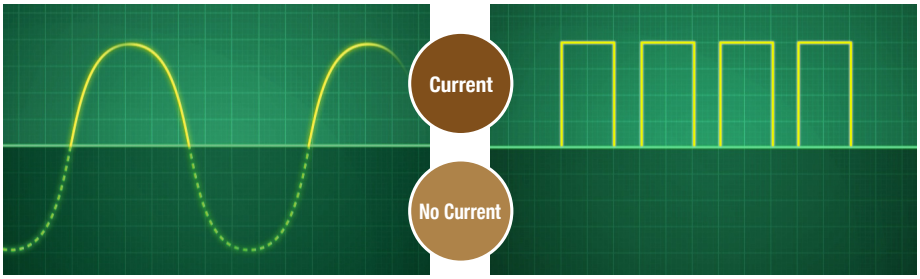

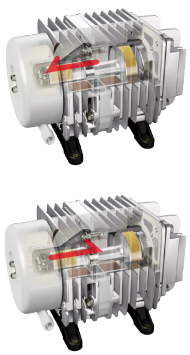

B When the electro-magnet is de-energized, the return spring pushes the piston back, forcing the compressed air out of the cylinder through the now opened outlet valve.

Repeating the movements of A and B delivers the function of compressor or vacuum pump.

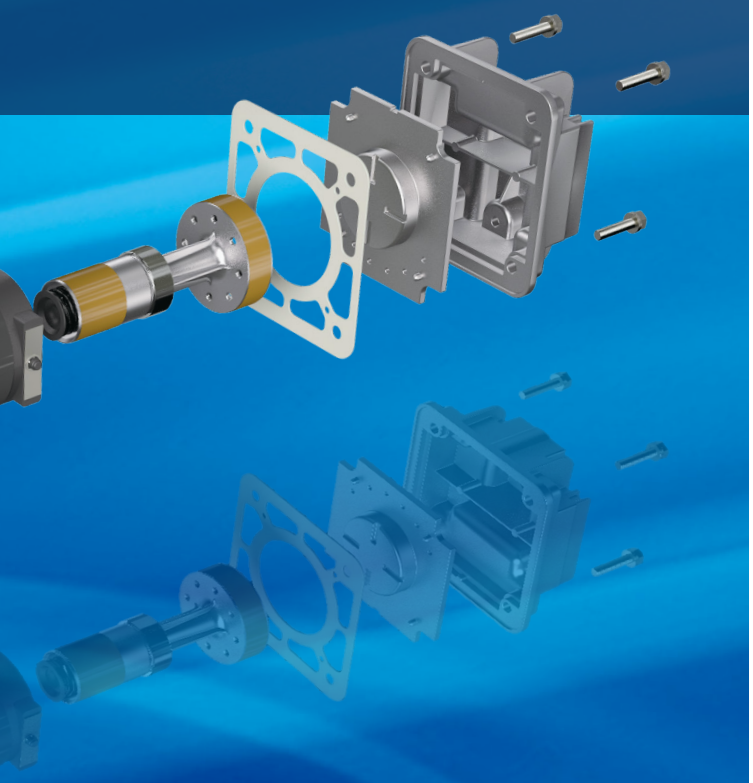

Compact Integrated Design

This unique system enables the mechanical resonance of a single part. An incredibly compact, lightweight design is achieved by combining what are entirely independent functions in conventional pumps – the motor and the compressor – into a superior single, unified structure.

Self-cooling Design

Cool intake air passes over the coils to reduce and control the rise in the pump's internal temperature. As a result of this feature, it is possible to almost completely seal the unit, thus improving the suppression of internal operating noise.

Overpressure Control Mechanism

Should the output pressure exceed the rated value, the piston will automatically adjust to a shorter stroke. Simultaneously, power consumption will automatically reduce to prevent the motor from failing or being burnt out.

Contents

	Page
Series Selection	3
Conversion Tables	6
The Mechanism and Structure of Nitto Kohki Pumps	7
Information Found in the Model Name	8
Explanation of Technical Terms	9
The Key Design Features of the Linear-motor-driven Free Piston System	11
Safety Guide	117

Linear Free Piston	**AC Linear Free Piston Compressor** AC0102 / AC0201A / AC0301A / AC0401A / AC0602 / AC0901 AC0902 / AC0105 / AC0110 / AC0207 / AC0410A / AC0610 AC0910 / AC0920	12
	AC Linear Free Piston Vacuum Pump VP0125 / VP0140 / VP0435A / VP0450 / VP0625 / VP0660 VP0940 / VP0940T	28
	DC Linear Free Piston Compressor DAH102-X1 / DAH102-Y1 / DAH105-X1 / DAH105-Y1 DAH110-X1 / DAH110-Y1	38
	DC Linear Free Piston Vacuum Pump DVH130-X1 / DVH130-Y1 / DVH145-X1 / DVH145-Y1	46
Diaphragm	**AC Linear Diaphragm Pump** Dual & Blower Type: VC0100 / VC0101 / VC0201B / VC0301B	52
DC Motor	**DC Piston Pump** **DC Diaphragm Pump** DP0105-X1 / DP0105-Y1 / DPA0105-X1 / DPA0105-Y1 / DP0410-X1 DP0410-Y1 / DP0410-X2 / DP0410-Y2 / DP0410T-Y1 / DP0410T-Y2 DP0125 / DP0140 / DP0102 / DP0102S / DP0102H-X1 / DP0102H-X2 DP0110-X1 / DP0110-Y1 / DP0110-X3 / DP0110T-X1 / DP0110T-Y1 DP0210TA-Y1	62
Liquid Pump	**Piezoelectric Pump** BPS / BPH / BPHS/ BPF Type **DC Diaphragm Liquid Pump** DPE-100 / DPE-400 / DPE-400BL / DPE-800 / DPE-100BLC / DPE-200BLC	86
	AC Linear Free Piston Blower LA-28B / LA-45C / LA-60B / LA-80B / LA-100A / LA-120A / LAM-200	94
	Made to Order Model AC0210 /AC0610A / VP0925A / VP0660 x 2 VCK0120 /VC0101E / VC0101S / LAM-150 / Bimor Pump	100
	Other product HK-400A / LV-125A and Vacuum Pen Assenbly	112
	"CUPLA" Quick Connect Couplings	118

Green Procurement

NITTO KOHKI has made every effort in developing "Environmental Improvement Plans" through the implementation of ISO14001, to execute environmentally conscious business activities on a company-wide basis. As a part of our ongoing commitment to the environment, we are also committed to reduce and/or exclude restricted substances from our products as designated by RoHS directives, laws and regulations of chemical substances.

Series Selection

AC Linear Free Piston Compressor

Model	Rated Pressure		Max. Pressure		Rated Pressure & Max. Pressure	Rated Airflow		Rated Airflow	Page
	kPa	psig	kPa	psig		L/min	cfm		
AC0102	20	2.84	40	5.69		5	0.177		13
AC0201A	10	1.42	20	2.84		20	0.71		14
AC0301A	10	1.42	30	4.27		28	0.99		15
AC0401A	10	1.42	35	4.98		35	1.24		16
AC0602	15	2.13	35	4.98		40	1.41		17
AC0901	10	1.42	40	5.69		80	2.83		18
AC0902	20	2.84	45	6.40		55	1.94		19
AC0105	50	7.11	80	11.4		2.5	0.088		20
AC0110	100	14.2	120	17.1		0.8	0.028		21
AC0207	70	9.96	100	14.2		3.5	0.124		22
AC0210	100	14.2	120	17.1		3.5	0.124		101
AC0410A	100	14.2	130	18.5		5	0.177		23
AC0610/AC0610A	100	14.2	150	21.3		8	0.283		24/102
AC0910	100	14.2	150	21.3		16	0.57		25
AC0920	200	28.4	350	49.7		8	0.283		26

0 50 100 150 200 250 300 350 (kPa)

0 20 40 60 80 100 120 (L/min)

AC Linear Free Piston Vacuum Pump

Model		Attainable Vacuum	Attainable Vacuum		Free Air Displacement		Free Air Displacement	Page
			kPa	in.Hg	L/min	cfm		
VP0125			-33.3	-9.84	7	0.247		29
VP0140			-53.3	-15.7	3	0.106		30
VP0435A			-46.7	-13.8	25	0.88		31
VP0450			-66.7	-19.7	18	0.64		32
VP0625			-33.3	-9.84	40	1.41		33
VP0660			-80	-23.6	25	0.88		34
VP0925A			-33.3	-9.84	80	2.83		103
VP0940			-53.3	-15.7	60	2.12		35
VP0940T			-53.3	-15.7	120	4.24		36
VP0660x2	Series		-93.3	-27.6	25	0.88		104
	Parallel		-80	-23.6	50	1.77		104

(kPa) -100 -80 -60 -40 -20 0

0 20 40 60 80 100 120 (L/min)

DC Linear Free Piston Compressor

Model	Rated Pressure		Max. Pressure		Rated Pressure & Max. Pressure	Rated Airflow		Rated Airflow	Page
	kPa	psig	kPa	psig		L/min	cfm		
DAH102-X1	20	2.84	50	7.11		5	0.177		39
DAH102-Y1	20	2.84	50	7.11		5	0.177		40
DAH105-X1	50	7.11	80	11.4		2.5	0.088		41
DAH105-Y1	50	7.11	80	11.4		2.5	0.088		42
DAH110-X1	100	14.2	120	17.1		1.0	0.035		43
DAH110-Y1	100	14.2	120	17.1		1.0	0.035		44

0 50 100 150 200 250 300 (kPa)

0 20 40 60 80 100 120 (L/min)

DC Linear Free Piston Vacuum Pump

Model	Attainable Vacuum	Attainable Vacuum		Free Air Displacement		Free Air Displacement	Page
		kPa	in.Hg	L/min	cfm		
DVH130-X1		-40	-11.8	7	0.247		47
DVH130-Y1		-40	-11.8	7	0.247		48
DVH145-X1		-60	-17.7	3	0.106		49
DVH145-Y1		-60	-17.7	3	0.106		50

(kPa) -100 -80 -60 -40 -20 0

0 20 40 60 80 100 120 (L/min)

AC Linear Diaphragm Pump (Blower Type)

Model	Rated Pressure		Max. Pressure		Rated Pressure & Max. Pressure	Rated Airflow		Rated Airflow	Page
	kPa	psig	kPa	psig		L/min	cfm		
VC0100	4	0.57	16	2.28		6	0.212		54
VC0101	10	1.42	20	2.84		10	0.35		56
VC0101E	10	1.42	20	2.84		15	0.53		107
VC0101S	5	0.71	26	3.70		15	0.53		57
VC0201B	10	1.42	18	2.56		20	0.71		59
VC0301B	10	1.42	20	2.84		25	0.88		61

0 50 100 150 200 250 300 (kPa) 0 20 40 60 80 100 120 (L/min)

AC Linear Diaphragm Pump (Dual Type)

Model	Attainable Vacuum	Attainable Vacuum		Rated Pressure		Max. Pressure		Rated Pressure & Max. Pressure	Rated Airflow		Rated Airflow	Page
		kPa	in.Hg	kPa	psig	kPa	psig		L/min	cfm		
VC0100		-14.7	-4.33	4	0.57	16	2.28		6	0.212		53
VC0101 120 V		-18.7	-5.51	10	1.42	18	2.56		10	0.35		55
VC0101 230 V		-10	-2.95	10	1.42	15	2.13		10	0.35		55
VC0101E		-18.7	-5.51	10	1.42	20	2.84		15	0.53		106
VC0101S		-24	-7.09	5	0.71	26	3.70		15	0.53		108
VC0201B		-18.7	-5.51	10	1.42	18	2.56		20	0.71		58
VC0301B		-21.3	-6.30	10	1.42	20	2.84		25	0.88		60
VCK0120 (Vacuum only)		-26.7	-7.87						18*	0.64*		105

(kPa) -80 -60 -40 -20 0 0 50 100 150 (kPa) 0 20 40 60 (L/min)

*Free Air Displacement

DC Liquid Pump

Model	Working Pressure Range		Working Pressure Range	Flow Rate	Flow Rate	Self-priming Pressure		Self-priming Pressure	Page
	kPa	psig		mL/min		kPa	psig		
DPE-100	0 to 100	0 to 14.2		100		20	2.84		89
DPE-400	0 to 100	0 to 14.2		400		40	5.69		89
DPE-400BL	0 to 100	0 to 14.2		400		40	5.69		89
DPE-800	0 to 100	0 to 14.2		800		40	5.69		89
DPE-100BLC	0 to 100	0 to 14.2		100		10	1.42		91
DPE-200BLC	0 to 100	0 to 14.2		200		20	2.84		91

(kPa) 0 20 40 60 80 100 (mL/min) 0 200 400 600 800 (kPa) 0 20 40 60

*Test conditions: Water at 25 degrees C

Liquid Pump (BIMOR PUMP)

Model	Discharge Pressure		Discharge Pressure	Flow Rate	Flow Rate	Self-priming Pressure		Self-priming Pressure	Page
	kPa	psig		mL/min		kPa	psig		
BPS-215i	15	2.13		30		3	0.43		86
BPS-235G	15	2.13		30		1.5	0.21		
BPH-214i	18	2.56		350		8	1.14		
BPH-214D	18	2.56		350		8	1.14		
BPH-214E	18	2.56		350		8	1.14		
BPH-214G	17	2.41		350		7	1.00		
BPH-414i	35	4.98		500		12	1.70		
BPH-414D	35	4.98		500		12	1.70		
BPH-414E	35	4.98		500		12	1.70		
BPH-414G	32	4.54		450		10	1.42		
BPH-474G	35	4.98		400		10	1.42		
BPH-474P	35	4.98		400		10	1.42		
BPHS-414i	35	4.98		700		12	1.70		
BPHS-414E	35	4.98		700		12	1.70		
BPHS-414G	35	4.98		700		12	1.70		
BPHS-474G	35	4.98		500		10	1.42		
BPHS-474P	35	4.98		500		10	1.42		
BPF-465P	35	4.98		400		10	1.42		

(kPa) 0 20 40 60 80 100 (mL/min) 0 200 400 600 800 (kPa) 0 20 40 60

*Test conditions: 25°C water at AC frequency 60 Hz.

DC Linear Compressor and Vacuum Pump (Dual Type)

Model	Attainable Vacuum	Attainable Vacuum		Max. Pressure		Max. Pressure	Free Air Displacement		Free Air Displacement	Page
		kPa	in.Hg	kPa	psig		L/min	cfm		
DP0125		-33.3	-9.84	30	4.27		2.5	0.088		73
DP0140		-53.3	-15.7	50	7.11		4	0.141		74
DP0102		-26.7	-7.87	45	6.40		5	0.177		75
DP0102S		-26.7	-7.87	45	6.40		7	0.247		76
DP0102H-X1		-50.7	-15.0	80	11.4		4	0.141		77
DP0110-X1		-66.7	-19.7	150	21.3		7.5	0.265		79
DP0110-Y1		-66.7	-19.7	150	21.3		7.5	0.265		80
DP0110-X3		-66.7	-19.7	150	21.3		7.5	0.265		81
DP0110T-X1		-60	-17.7	150	21.3		5.5	0.194		82
DP0110T-Y1		-60	-17.7	150	21.3		5.5	0.194		83
DP0210TA-Y1		-60	-17.7	150	21.3		10	0.35		84
DP0105-X1		-66.7	-19.7	250	35.6		2.8	0.099		63
DP0105-Y1		-66.7	-19.7	250	35.6		2.8	0.099		64

(kPa) -80 -60 -40 -20 0 | 0 50 100 150 200 250 (kPa) | 0 20 40 60 (L/min)

DC Linear Compressor only

Model	Attainable Vacuum	Attainable Vacuum		Max. Pressure		Max. Pressure	Free Air Displacement		Free Air Displacement	Page
		kPa	in.Hg	kPa	psig		L/min	cfm		
DP0102H-X2				80	11.4		4	0.141		78
DPA0105-X1				220	31.3		2.8	0.099		65
DPA0105-Y1				220	31.3		2.8	0.099		66
DP0410-X2				180	25.6		18	0.64		69
DP0410-Y2				180	25.6		18	0.64		70
DP0410T-Y2				150	21.3		34	1.2		72

(kPa) -80 -60 -40 -20 0 | 0 50 100 150 200 250 (kPa) | 0 20 40 60 (L/min)

DC Vacuum Pump only

Model	Attainable Vacuum	Attainable Vacuum		Max. Pressure		Max. Pressure	Free Air Displacement		Free Air Displacement	Page
		kPa	in.Hg	kPa	psig		L/min	cfm		
DP0410-X1		-77.3	-22.8				18	0.64		67
DP0410-Y1		-77.3	-22.8				18	0.64		68
DP0410T-Y1		-77.3	-22.8				34	1.2		71

(kPa) -80 -60 -40 -20 0 | 0 50 100 150 200 250 (kPa) | 0 20 40 60 (L/min)

Conversion Tables

Pressure / Flow Rate / Vacuum

Pressure

kPa	kgf/cm^2 (bar)	psig
300	3.0	42.7
280	2.8	39.8
250	2.5	35.6
200	2.0	28.5
180	1.8	25.6
150	1.5	21.3
120	1.2	17.1
100	**1.0**	**14.2**
80	0.8	11.4
70	0.7	9.96
50	0.5	7.11
45	0.45	6.40
40	0.4	5.69
35	0.35	4.98
34	0.34	4.84
30	0.3	4.27
20	0.2	2.84
18	0.18	2.56
15	0.15	2.13
11	0.11	1.56
10	0.1	1.42
7	**0.07**	**1.00**
5	0.05	0.71
1	0.01	0.142
* 0	0	0

Flow Rate

cfm	L/min	cfm	L/min
0.035	**1.00**	2.12	60.0
0.070	2.00	2.25	63.7
0.100	2.83	2.47	70.0
0.105	3.00	2.50	70.8
0.177	5.00	2.65	75.0
0.250	7.08	2.75	77.9
0.353	10.0	2.83	80.0
0.500	14.2	3.00	85.0
0.530	15.0	3.18	90.0
0.708	20.0	3.25	92.0
0.750	21.2	3.50	99.1
0.883	25.0	3.53	100
1.00	**28.32**	3.75	106
1.06	30.0	3.89	110
1.24	35.0	4.00	113
1.25	35.4	4.24	120
1.41	40.0	4.50	127
1.50	42.5	5.00	142
1.59	45.0	5.30	150
1.75	49.6	6.00	170
1.77	50.0	7.00	198
2.00	56.6	7.06	200

Vacuum

kPa	mmHg	mbar	in.Hg
* 0	0	0	0
−13.3	−100	−133	−3.94
−26.7	−200	−267	−7.87
−33.3	−250	−333	−9.84
−44.0	−330	−440	−13.0
−45.3	−340	−453	−13.4
−46.7	−350	−467	−13.8
−53.3	−400	−533	−15.7
−60.0	−450	−600	−17.7
−66.7	−500	−667	−19.7
−73.3	−550	−733	−21.7
−80.0	−600	−800	−23.6
−93.3	−700	−933	−27.6
−100	−750	−1000	−29.5
** −101.3	−760	−1013	−29.9

* Gauge pressure
** Absolute vacuum

Pressure

from \ to	kPa	kgf/cm^2	bar	psig
kPa	1	0.01	0.01	0.142
kgf/cm^2	100	1	1	14.2
bar	100	1	1	14.2
psig	7	0.07	0.07	1

Vacuum

from \ to	kPa	mmHg	in.Hg	mbar
kPa	−1	−7.50	−0.295	−10
mmHg	−0.133	−1	−0.0394	−1.335
in. Hg	−3.39	−25.4	−1	−33.92
mbar	−0.1	−0.75	−0.0295	−1

The Mechanism and Structure of Nitto Kohki Pumps

Linear Motor Driven Free Piston System

The attractive force of the electromagnet and the reaction force of the spring drive the piston to generate pressure.
There are AC models that use AC waveform and a silicon diode, and DC models that use DC waveform and an inverter.

[AC Power (The effect of using a silicon diode)] AC power

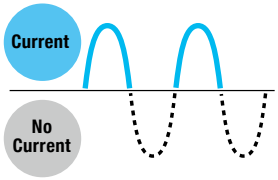

By utilizing the characteristics of the silicon diode, it creates a half-rectified current that repeats ON (current flows) and OFF (no current).

[DC Power (The effect of using an inverter)] DC power

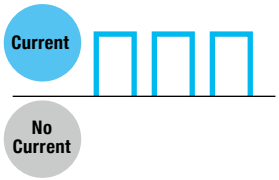

The inverter creates a half-rectified current that repeats ON (current flows) and OFF (no current).

<Structural image>

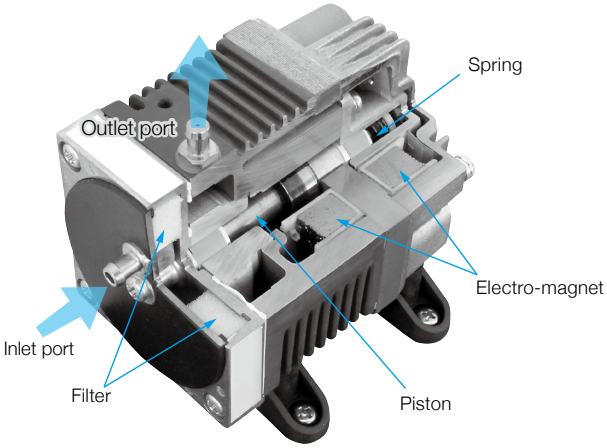

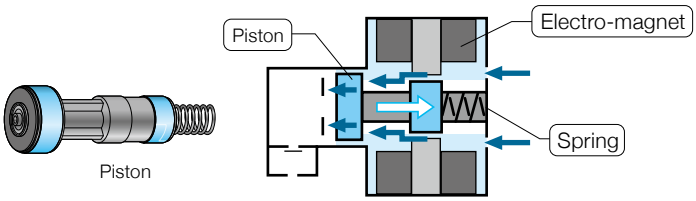

When electric current flows, a magnetic force is generated to pull the piston and the spring is compressed.

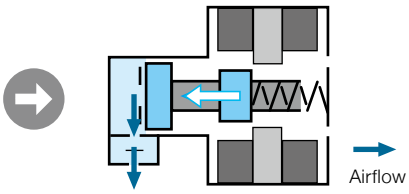

When the electric current stops, the magnetic force is lost and the piston is pushed back by the restoring force of the compressed spring.

Electromagnetic Driven Diaphragm System

The attractive / repulsive force of the electromagnet reciprocates a vibrator that moves the diaphragm to generate pressure.

[AC Power (The effect of using a diaphragm)]

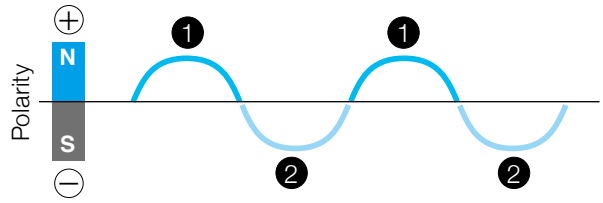

<Structural image>

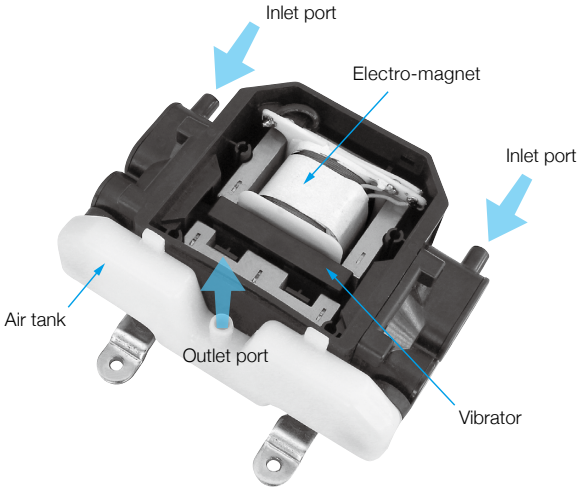

The air is drawn and discharged alternately by the changing polarity of the AC power supply

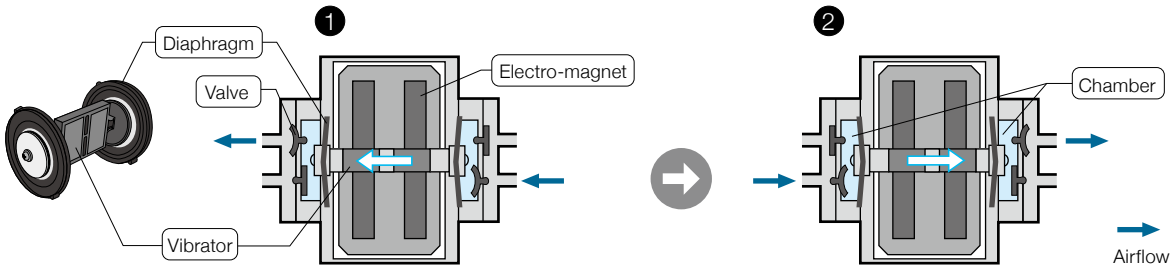

DC Motor Driven Diaphragm System

The rotational motion of the DC motor is converted into a reciprocating motion by the crank, and moves the diaphragm attached to the connecting rod to generate pressure.

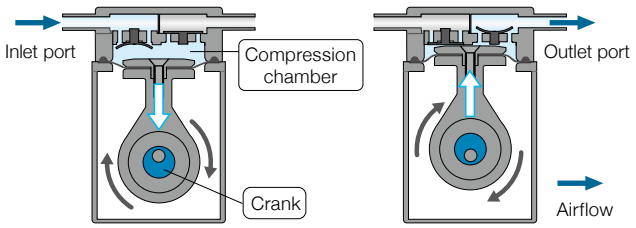

<Parts>

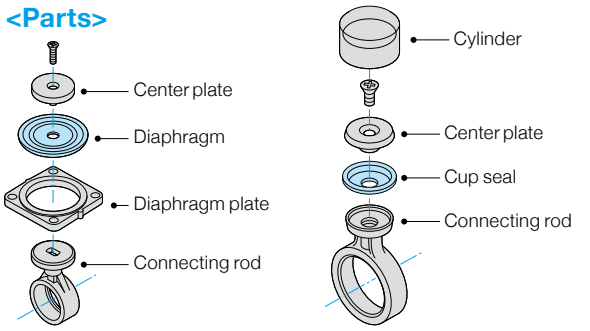

Diaphragm pump

Piston pump (Cup seal system)

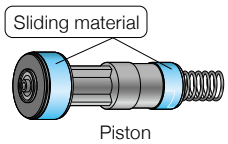

The know-how of the piston sliding material used for Nitto Kohki linear compressor and vacuum pump is utilized for the cup seal.

DC Motor Driven Piston Pump (Cup seal system)

The rotational motion of the DC motor is converted into a reciprocating motion by the crank, and moves the cup seal attached to the connecting rod to generate pressure.

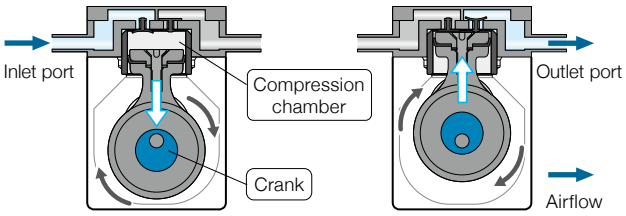

The outer circumference of the seal part (cup seal) flexibly follows the inner wall of the cylinder against the dynamic movement of the piston.

<Structural image> (Common to diaphragm and cup seal)

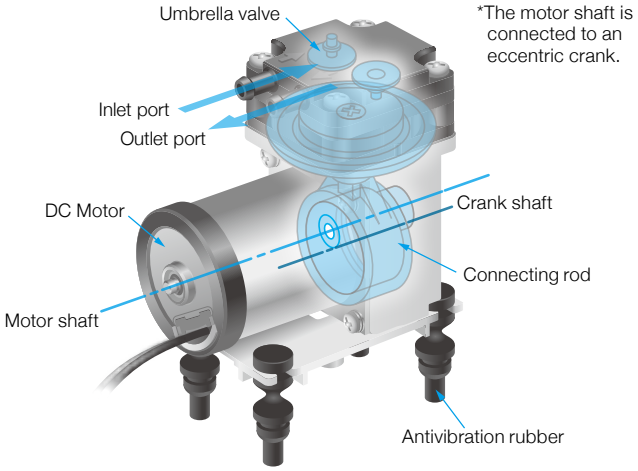

Liquid pump / Diaphragm System

<Pulse absorption mechanism>

1. Suction
2. Discharge. Partial fluid delivery to pulse absorption chamber, not directly forced to outlet port.
3. Cyclical suction drawn into pump is synchronized with the discharge. Pulses are attenuated through the process of 2 and 3 .

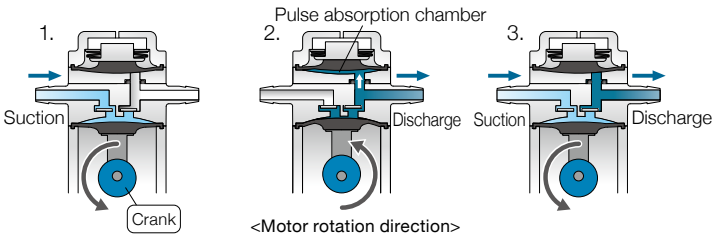

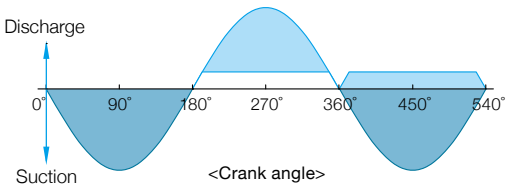

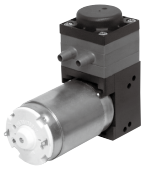

Liquid pump / Piezoelectric pump

<Piezoelectric element>

•Bimorph vibrator

BIMOR PUMP's driving force, the bimorph, comprises the elastic mold (Shim) between two parallel piezoelectric wafers.

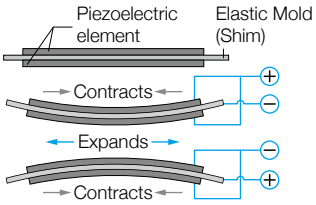

*The shape of Bimorph is circular.
It deforms when applied with electricity.

<Cross section>

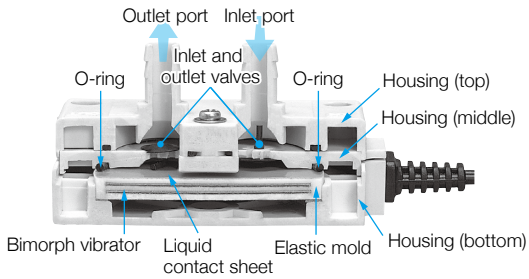

Information Found in the Model Name

The following indications of power consumption, rated pressure and attained vacuum should be used only as a general guideline for model selection.

AC 0102

- 0102: Rated Pressure: 20 kPa {0.2 kgf/cm²}
- 0102: Rated Consumption: 10 W
- AC: Air compressor

VP 0125

- 0125: Attainable Vacuum: -33.3 kPa {-250 mmHg}
- 0125: Rated Consumption: 10 W
- VP: Vacuum pump

Explanation of Technical Terms

Be sure to read the following "Explanation of Technical Terms" before selecting a model appropriate for your application.

Application Examples and Applicable Fluids for Compressors and Vacuum Pumps

Application: for incorporation into equipment **Applicable fluid:** Air

For Compressors & Vacuum Pumps

Rated performance:
The average total accumulated time over which the unit can be used without repair, except the maintenance of the filter. This indicates the expected time required for the rated air flow to fall to 80% of the specification value in the rated operation. The actual life might vary depending on the actual operating and environmental conditions such as output pressure setting, maintenance schedule, ventilation, ambient temperature, duty cycle, etc.

MTTF:
MTTF (Mean Time to Failure) is the average time that the product will function before it fails.However, this time is reference only and does not guarantee.Since MTTF depends on your actual operating environment and conditions, conduct performance evaluation test with an actual product prior to use.

Rated voltage:
The two major types are 115 V AC/60 Hz and 230 V AC/50 Hz (excluding DC motors). While most models can be operated at both 50 Hz and 60 Hz with different performance characteristics, there are some models that are frequency specific.

Duty cycle:
The period of operation under the condition that the coil temperature will not exceed the coil insulation class limit.

Rated frequency:
In the case of AC drive pumps, the rated frequency will vary according to the model. While some are designed for only 50 Hz or for 60 Hz, some are designed for both 50 Hz and 60 Hz.

Coil insulations:
The suggested class, most bare units attaining "E" class, is based on Japanese electric regulations. They are merely suggestions since bare units are considered "components" and are not classified as complete products or systems.

Coil Insulation Class(for reference only)	(Temperature limit, degrees C)
A	100
E	115
B	125
F	150

Control method:
Be careful when controlling compressors and vacuum pumps with electronic components because the power factor depends upon the load.

Outside & mounting dimensions:
Useful for assessing the required space for installation. Include sufficient space surrounding the pump when designing it into your application.

Operating ambient temperature: 0 to 40°C

Operating ambient humidity: 30 to 85% non-condensing

Storage environment temperature: -10 to 60°C

Storage environment humidity: 10 to 90% non-condensing

Improvement Suggestion

Our compressors and vacuum pumps employ a unique internal coil cooling feature to reduce or control the rise in internal temperature. If they are operated at higher than rated pressures, elevated temperatures may result. Should these temperatures become excessive, operating duty cycles may need to be reduced, or the use of an auxiliary cooling fan should be considered.

For Compressors

Rated pressure:	This is the pressure point where you will get optimum capabilities for performance and service life and where the pump is designed to have almost the same airflow regardless of a rated frequency of 50 Hz or 60 Hz.
Rated airflow:	The discharge airflow volume at the rated pressure.
Rated operation:	Operating conditions regarding the rated pressure, rated voltage, and rated frequency.
Maximum pressure:	The highest obtainable pressure at which the pump is designed to operate while producing zero discharge airflow (not guaranteed; for reference only).
Power consumption:	The wattage during operation at the rated pressure.
Electric current:	The electric current during operation at the rated pressure (for reference only).
Airflow characteristics:	Discharge pressure-airflow curve (for reference only).
Power consumption characteristics:	Discharge pressure-power consumption curve (for reference only).

For Vacuum Pumps

Attainable vacuum :	The highest vacuum the pump can attain with the pump inlet closed (except some of the exclusive models). *The degree of vacuum shown in this catalog is gauge pressure.
Free air displacement:	The airflow volume at zero vacuum (within three (3) minutes after starting).
Power consumption:	The maximum wattage on the power consumption curve when measured against vacuum levels up to the pumps attainable vacuum.
Electric current:	The maximum electric current on the current characteristics curve when measured against vacuum levels up to the pumps attainable vacuum. (for reference only).
Airflow characteristics:	Vacuum-airflow curve (for reference only).
Power consumption characteristics:	Vacuum-power consumption curve (for reference only).
Exhaust characteristics:	The time required to attain the respective vacuum in a 10 liter container (for reference only).

For DC Pumps

Operating ambient temperature:	0 to 40°C (5 to 50°C for DP0105 only)
Operating ambient humidity:	30 to 85% non-condensing

Start-up the pump at the same level as the atmospheric pressure (Similarly in the case of DPE series pumps)

For Liquid Pumps

Self-priming pressure:	The power the pump requires to draw up 25°C water. 1 kPa is equal to the power needed to draw up 25°C water 10 cm.

This catalog will give the guidelines needed to determine the appropriate model for your application(s). However, in certain cases you may need further detailed information, which will be provided in the form of a specifications sheet for each model/version by our technical staff who will further assist you in your selection.

Specifications and designs are subject to change at any time without notice.
It is recommended that OEM customers confirm the required specifications in writing before placing orders.

Experience gained in designing, engineering, manufacturing and continually perfecting our products in thousands of applications has resulted in a "functionally intelligent" package. Please review these key design features and see how every design element contributes overall to the creation of a superior compressor or vacuum pump.

The Key Design Features of the Linear-motor-driven Free Piston System

Compact and Lightweight
With the motor and compressor combined into the single structure

With the piston as the only moving part, efficient space utilization enables our pump to be considerably smaller and lighter than other pumps. This allows the OEM design engineer increased packaging options for other internal components.

Low Vibration
Using an ultra-lightweight piston

Reducing the moving parts to only the piston minimizes reactive force vibrations to the pump body. In addition, the secondary vibrations are isolated or absorbed through the anti-vibration rubber feet.

Low Noise Level
No transmission assemblies, means less noise

With no need for complicated transmission mechanisms riding on ball bearings, or actuating linkages creating friction and noise, NITTO KOHKI's pumps are inherently quieter. Additionally, the almost completely sealed configuration further suppresses secondary internal operating noises.

Clean Operation – Clean Air
Due to oil-less construction

All wearing surfaces use no oil, grease or other contaminating lubricants. The combination of a precision fluoropolymer sleeved piston assisted by an "air-bearing effect" made possible through a unique air path design, assures that the outlet air is completely free of oil.

Low Power Consumption
Truly energy efficient through integrated design

Since the low mass piston is the only moving part, frictional losses are minimized, allowing lower starting and running current, and thus greater efficiency. Related benefits are realized through a lower rise in temperature, facilitating a longer operating life for the pump and the other components within your system.

Overload Protection Structure
Protects against burnout

As the pressure within the compressor increases, the piston stroke decreases. Along with this, electric current decreases. Thus a temporary overload will not cause a failure or the pump to burnout.

Minimal Pulsating Effect
Due to the ideal piston stroke

The piston's mechanical resonance speed is synchronized with the input power frequency regardless of the load, i.e., 3000 strokes at 50 Hz, and 3600 strokes at 60 Hz per minute. This high speed produces shorter pulses which translate into a smoother, more uniform and "linear" motion.

Instant Response
Enabling easy start-ups in frequent on-off short cycle applications

A very low starting current enables our pumps to produce immediate performance in quick short cycle applications, even in the presence of residual back pressure.

Easy Maintenance
Only air filter and piston to change

The oil-less construction requires no lubrication. A simple mechanism containing the piston as the only moving part causes no failure or burning due to an overload and provides stable performance over a long period of time.

Longer Lifetime
Increased OEM value

All key design features listed here combine to provide superior performance in all the important aspects of superior pump design. This enables the OEM engineer to have complete confidence in incorporating the unit into the most demanding systems, in the most advanced equipment.

AC LINEAR
Free Piston Compressor

AIR COMPRESSOR

AC series
Low pressure

AC series
Intermediate pressure

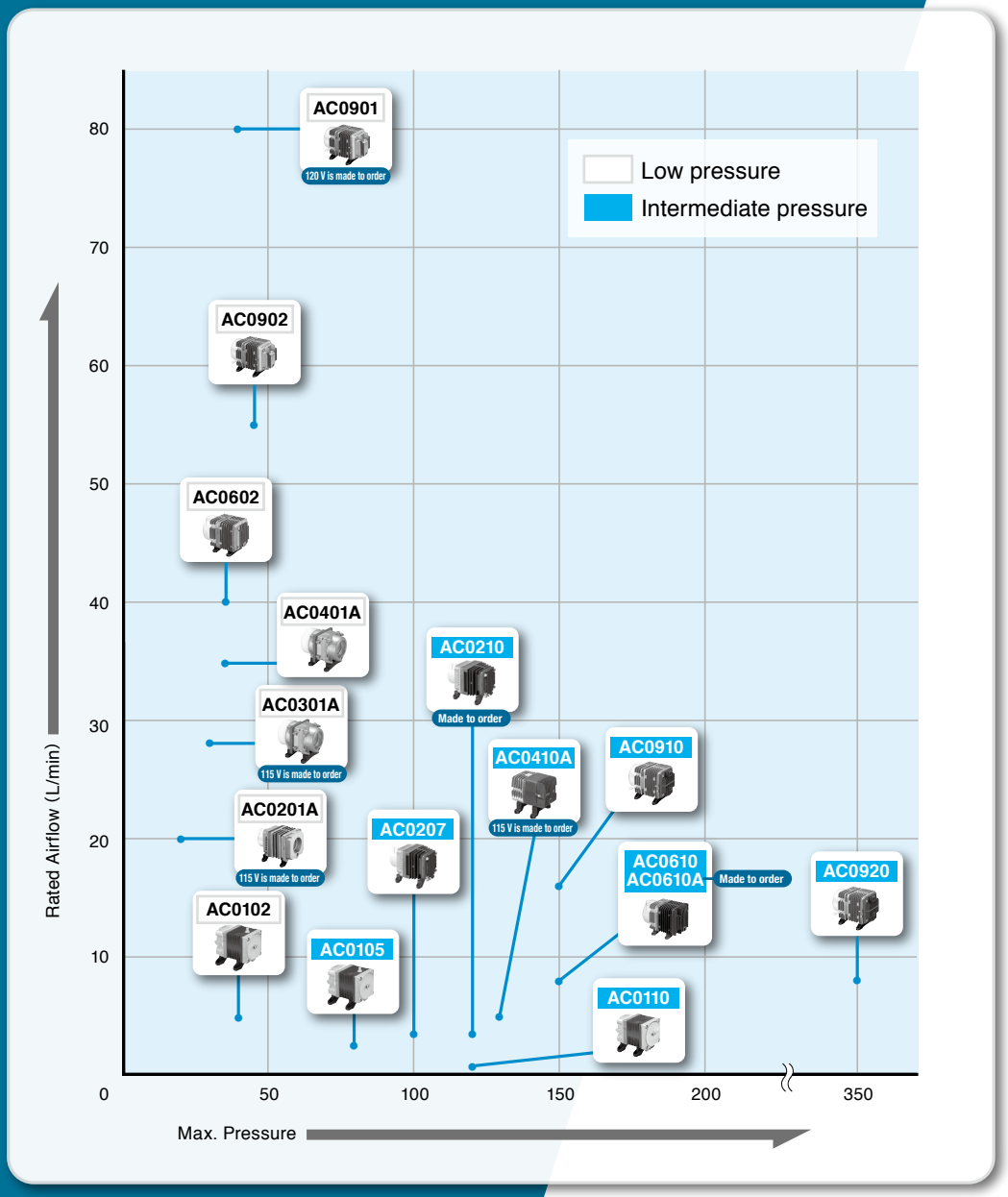

Page

AC0102 — 13
AC0201A — 14
AC0301A — 15
AC0401A — 16
AC0602 — 17
AC0901 — 18
AC0902 — 19

AC0105 — 20
AC0110 — 21
AC0207 — 22
AC0410A — 23
AC0610 — 24
AC0910 — 25
AC0920 — 26

Made to Order
AC0210 — 101
AC0610A — 102

Compressor

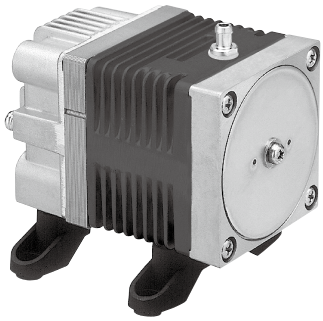

Model AC0102

115 V/230 V | 230 V | 230 V

Airflow & Power Consumption

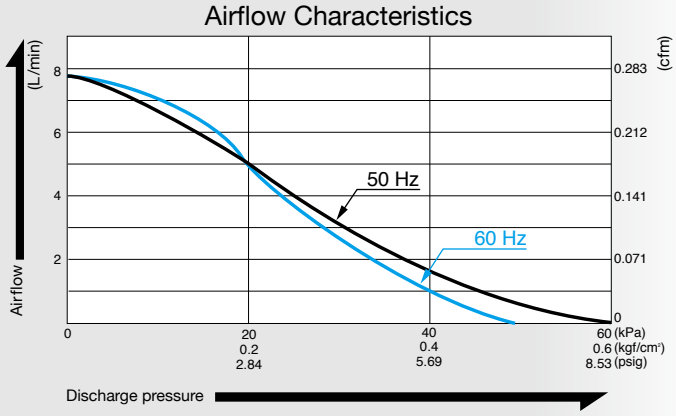

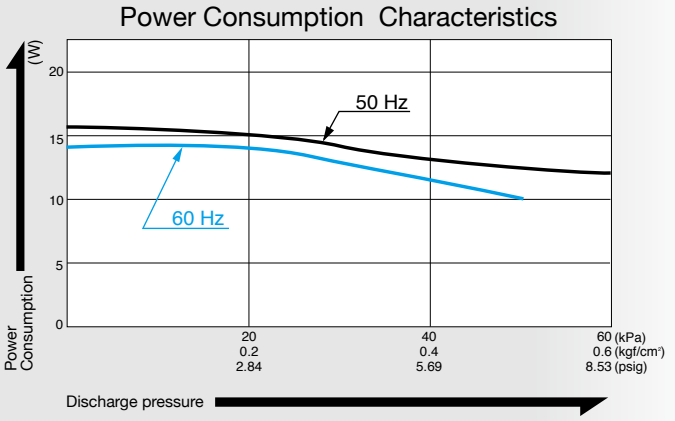

Specifications

Rated Pressure	20 kPa (0.2 kgf/cm^2) 0.2 bar 2.84 psig	
Rated Airflow	5 L/min 0.177 cfm	
Maximum Pressure	40 kPa (0.4 kgf/cm^2) 0.4 bar 5.69 psig	
Rated Voltage	115 V AC	230 V AC
Power Consumption	14 W	15 W
Rated Frequency	60 Hz	50 Hz
Rated Performance (MTTF)	10,000 hours	
Outlet	6 mm O.D. hose barb	
Duty Cycle	Continuous	
Coil Insulation Class	Class B for UL	
Mounting Dimensions	48 (L) x 62 (W) mm 1 - 57/64" (L) x 2 - 7/16" (W)	
Weight	0.7 kg 1.54 Lbs	
Leadwire Length	200 mm 7 - 7/8"	

Application Examples

Dripping Machine

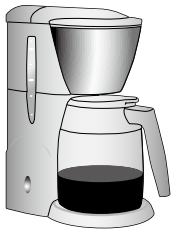

Blood Pressure Tester

External Dimensions (Unit: mm)

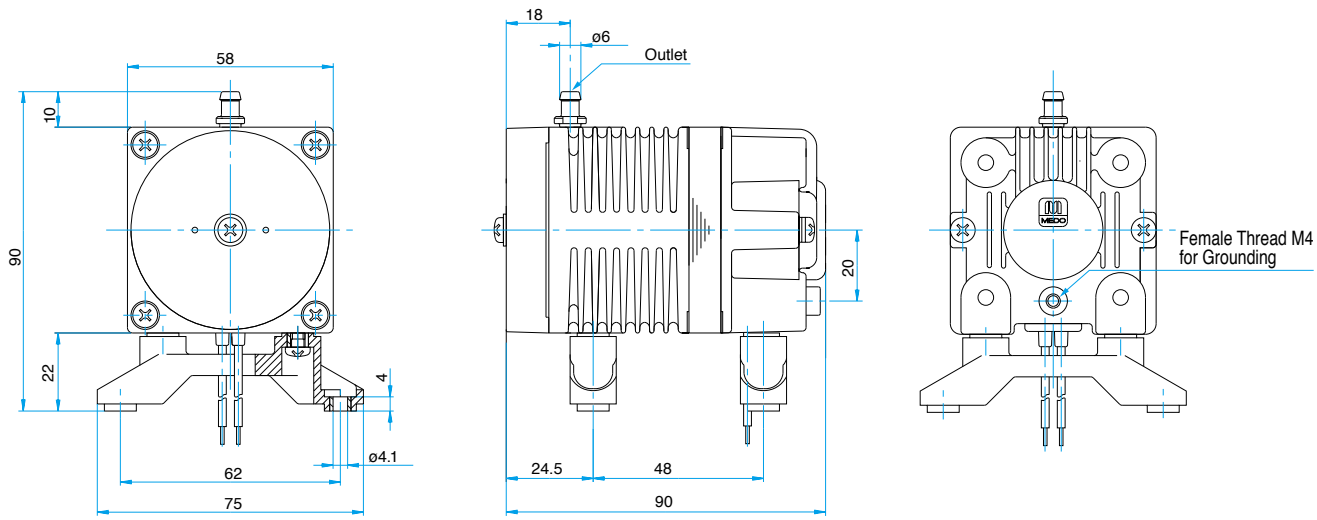

Compressor

Model AC0201A

115 V is made to order

115 V | 230 V | 230 V

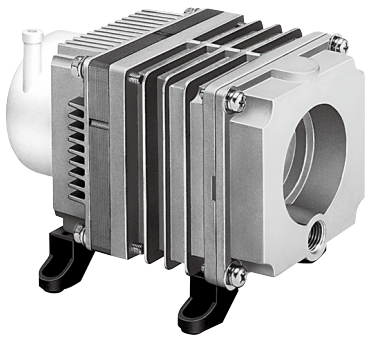

Airflow & Power Consumption

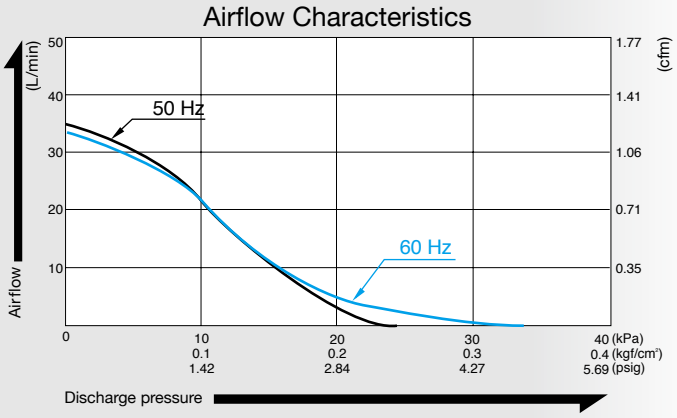

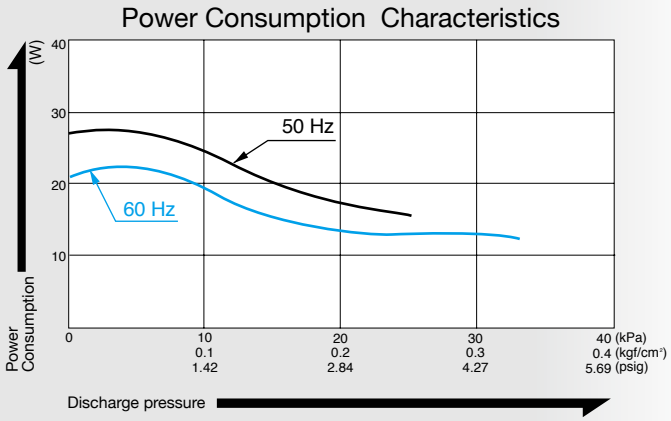

Specifications

Rated Pressure	10 kPa (0.1 kgf/cm²) 0.1 bar 1.42 psig	
Rated Airflow	20 L/min 0.71 cfm	
Maximum Pressure	20 kPa (0.2 kgf/cm²) 0.2 bar 2.84 psig	
Rated Voltage	115 V AC	230 V AC
Power Consumption	19 W	23 W
Rated Frequency	60 Hz	50 Hz
Rated Performance	6,000 hours	
Outlet	ISO Rc 1/4	
Duty Cycle	Continuous	
Coil Insulation Class	Class B for UL	Class E equivalent
Mounting Dimensions	73 (L) x 88 (W) mm 2 - 7/8" (L) x 3 - 15/32" (W)	
Weight	1.5 kg 3.3 Lbs	
Leadwire Length	200 mm 7 - 7/8"	

Application Examples

Seat Lifter

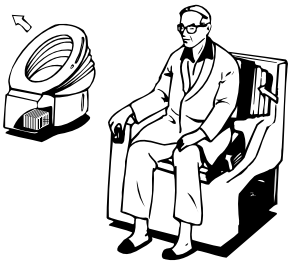

Bed Sore Prevention Mattress

External Dimensions (Unit: mm)

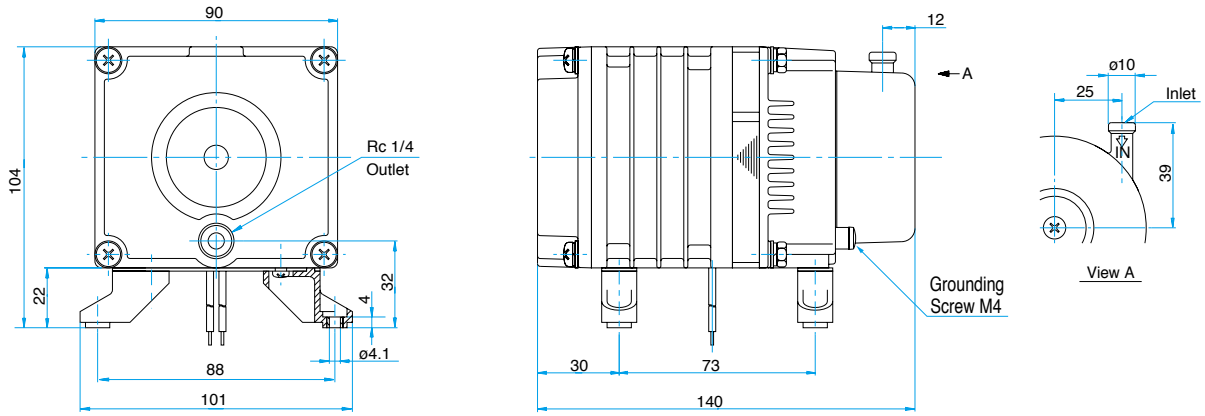

Compressor

Model AC0301A

115 V is made to order

115 V | 230 V | 230 V

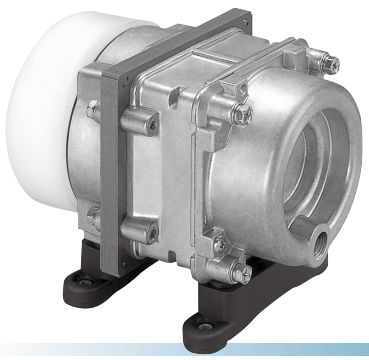

Airflow & Power Consumption

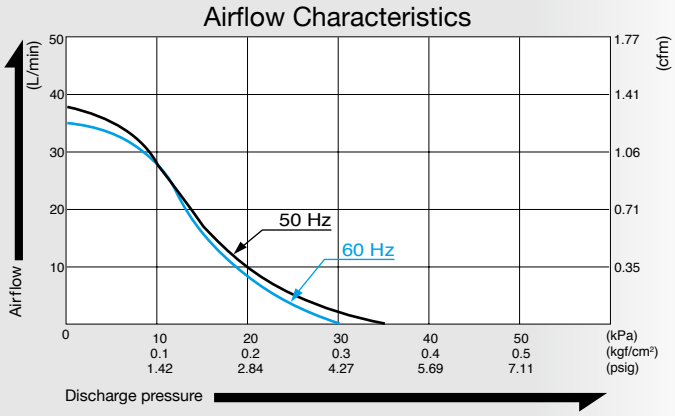

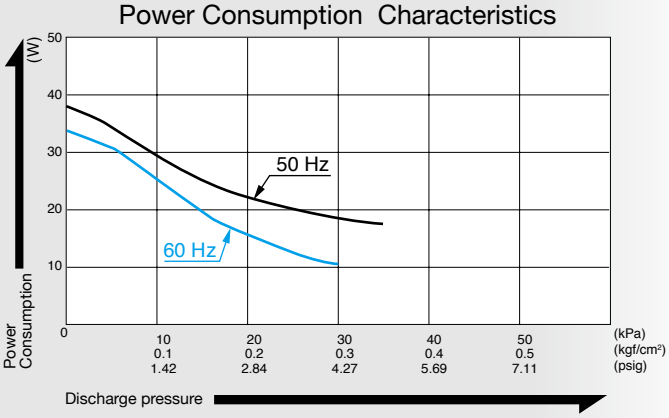

Specifications

Rated Pressure	10 kPa (0.1 kgf/cm²) 0.1 bar 1.42 psig	
Rated Airflow	28 L/min 0.99 cfm	
Maximum Pressure	30 kPa (0.3 kgf/cm²) 0.3 bar 4.27 psig	
Rated Voltage	115 V AC	230 V AC
Power Consumption	25 W	29 W
Rated Frequency	60 Hz	50 Hz
Rated Performance	10,000 hours	
Outlet	ISO Rc 1/4	
Duty Cycle	Continuous	
Coil Insulation Class	Class B for UL	Class E equivalent
Mounting Dimensions	68 (L) x 84 (W) mm 2 - 43/64" (L) x 3 - 5/16" (W)	
Weight	1.9 kg 4.2 Lbs	
Leadwire Length	200 mm 7 - 7/8"	

Application Examples

Liquid Mixer

Seat Lifter

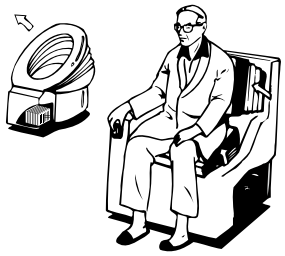

External Dimensions (Unit: mm)

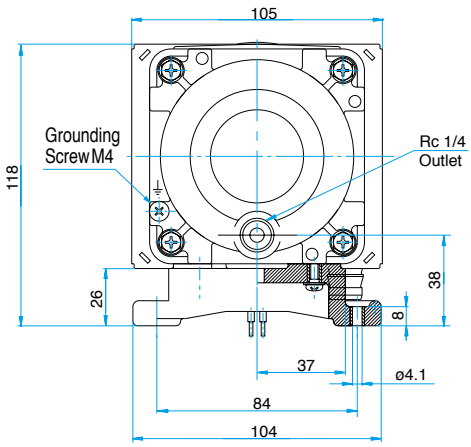

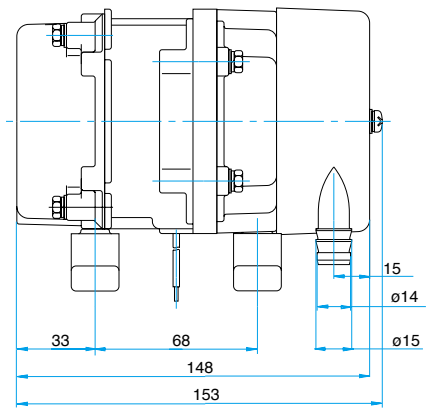

Compressor

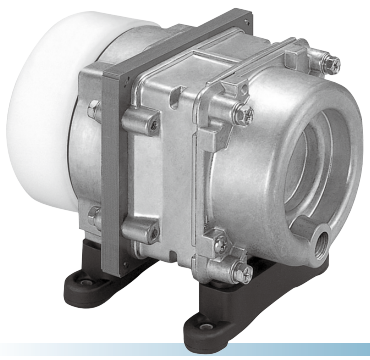

Model AC0401A

120 V | 230 V | 230 V

Airflow & Power Consumption

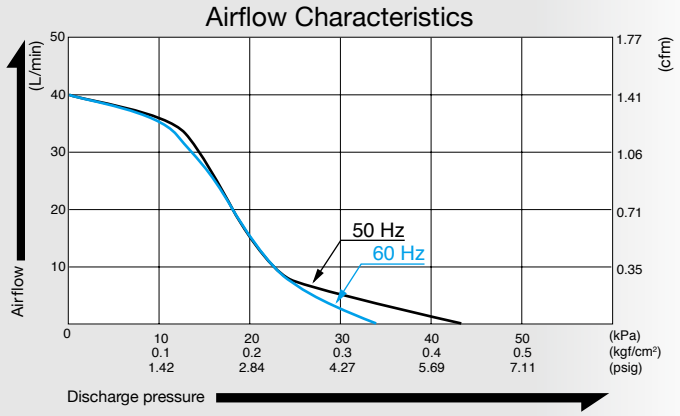

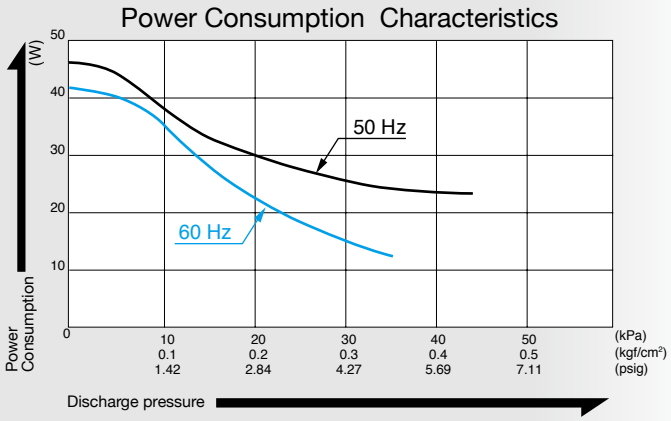

Specifications

Rated Pressure	10 kPa (0.1 kgf/cm²) 0.1 bar 1.42 psig	
Rated Airflow	35 L/min 1.24 cfm	
Maximum Pressure	30 kPa (0.3 kgf/cm²) 0.3 bar 4.27 psig	35 kPa (0.35 kgf/cm²) 0.35 bar 4.98 psig
Rated Voltage	120 V AC	230 V AC
Power Consumption	35 W	38 W
Rated Frequency	60 Hz	50 Hz
Rated Performance	10,000 hours	
Outlet	ISO Rc 1/4	
Duty Cycle	Continuous	
Coil Insulation Class	Class A for UL	Class E equivalent
Mounting Dimensions	68 (L) x 84 (W) mm 2 - 43/64" (L) x 3 - 5/16" (W)	
Weight	1.9 kg 4.2 Lbs	
Leadwire Length	200 mm 7 - 7/8"	

Application Examples

Liquid Mixer

Air Bearing

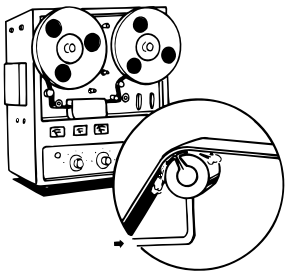

External Dimensions (Unit: mm)

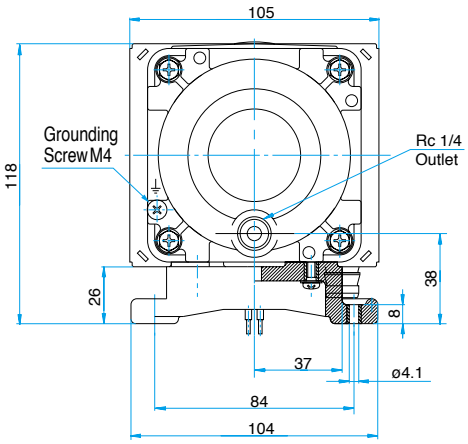

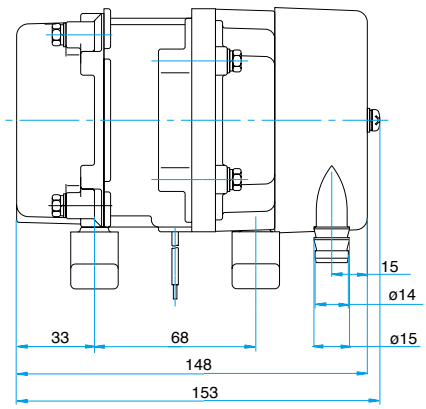

Compressor

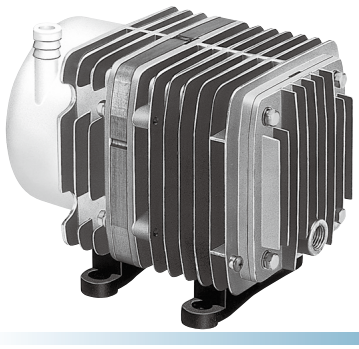

Model AC0602

115 V | 230 V | 230 V

Airflow & Power Consumption

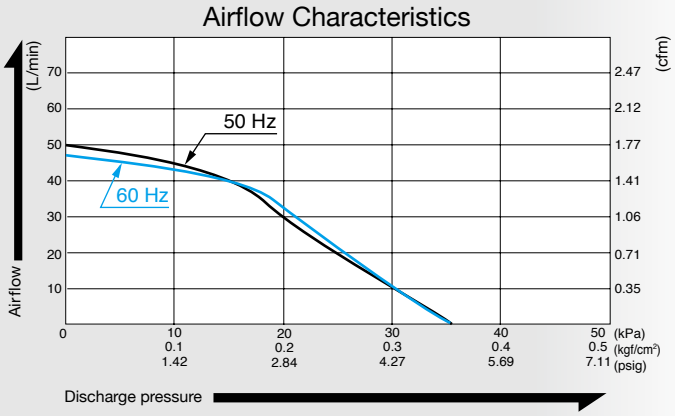

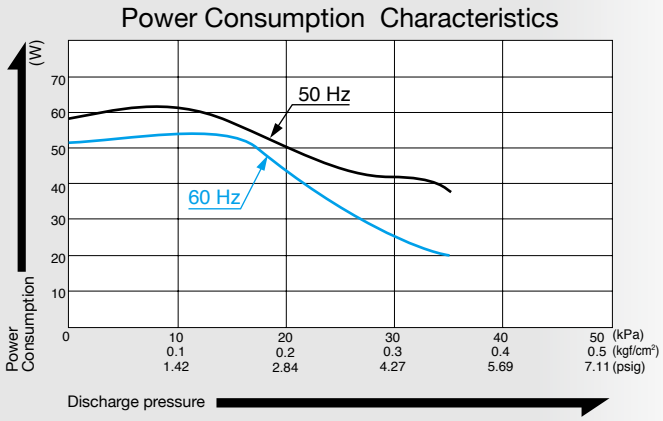

Specifications

Rated Pressure	15 kPa (0.15 kgf/cm²) 0.15 bar 2.13 psig	
Rated Airflow	40 L/min 1.41 cfm	
Maximum Pressure	35 kPa (0.35 kgf/cm²) 0.35 bar 4.98 psig	
Rated Voltage	115 V AC	230 V AC
Power Consumption	52 W	58 W
Rated Frequency	60 Hz	50 Hz
Rated Performance	10,000 hours	
Outlet	ISO Rc 1/4	
Duty Cycle	Continuous	
Coil Insulation Class	Class A for UL	Class E equivalent
Mounting Dimensions	68 (L) x 84 (W) mm 2 - 43/64" (L) x 3 - 5/16" (W)	
Weight	3 kg 6.6 Lbs	
Leadwire Length	235 mm 9 - 1/4"	350 mm 13 - 25/32"

Application Examples

Air Blaster for Bandsaw

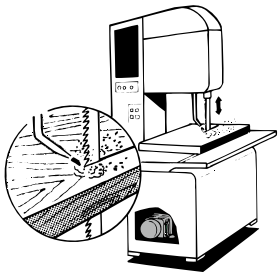

Clean Room Ventilation

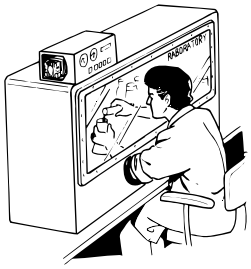

External Dimensions (Unit: mm)

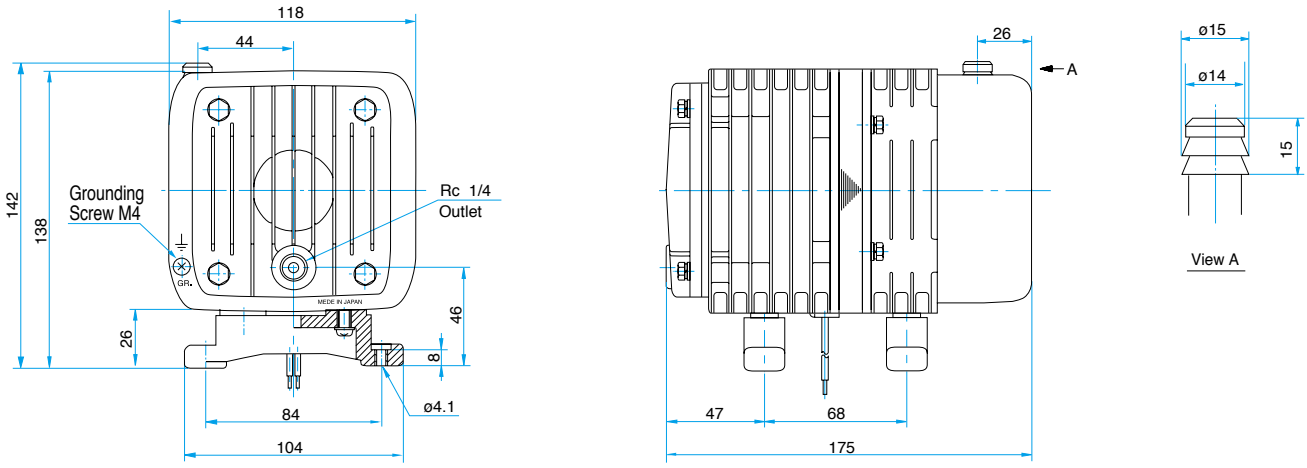

Compressor

Model AC0901

120 V is made to order

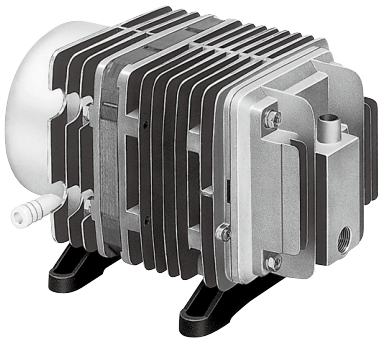

120 V/230 V | 230 V | 230 V

Airflow & Power Consumption

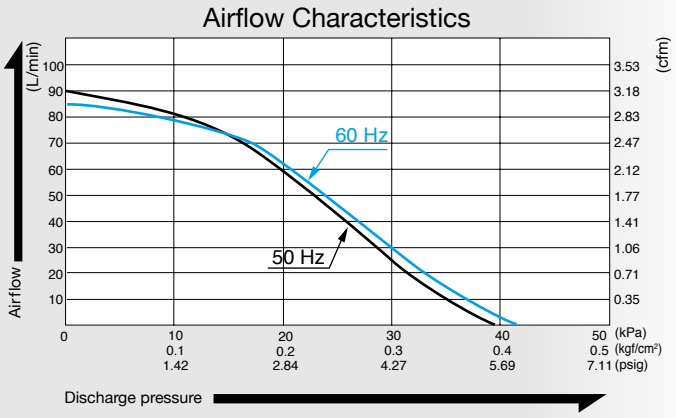

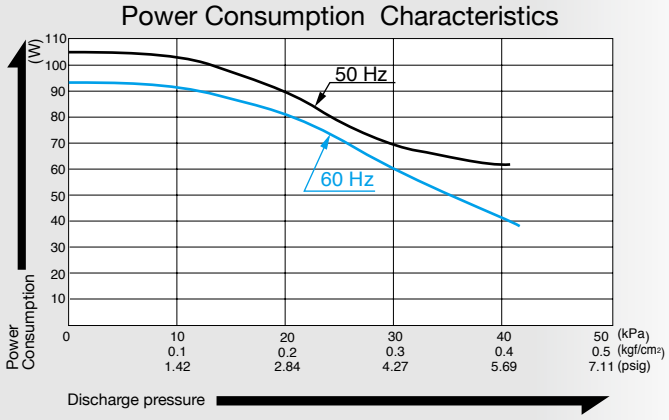

Specifications

Rated Pressure	10 kPa (0.1 kgf/cm²) 0.1 bar 1.42 psig	
Rated Airflow	80 L/min 2.83 cfm	
Maximum Pressure	40 kPa (0.4 kgf/cm²) 0.4 bar 5.69 psig	
Rated Voltage	120 V AC	230 V AC
Power Consumption	88 W	99 W
Rated Frequency	60 Hz	50 Hz
Rated Performance	10,000 hours	
Outlet	ISO Rc 3/8	
Duty Cycle	Continuous	
Coil Insulation Class	Class B for UL	Class E equivalent
Mounting Dimensions	102 (L) x 130 (W) mm 4 - 1/64" (L) x 5 - 1/8" (W)	
Weight	4.9 kg 10.8 Lbs	
Leadwire Length	300 mm 11 - 13/16"	

Application Examples

Air Lifter for Bathtub

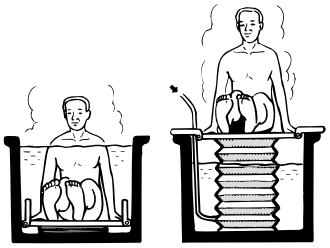

Liquid Dispenser

External Dimensions (Unit: mm)

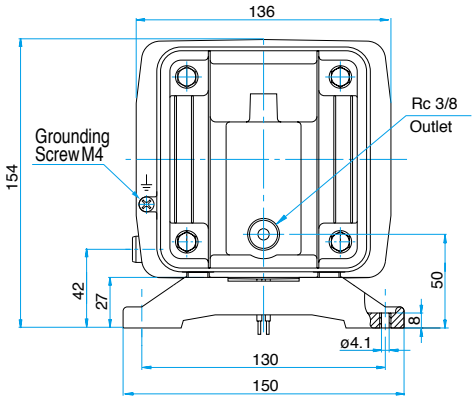

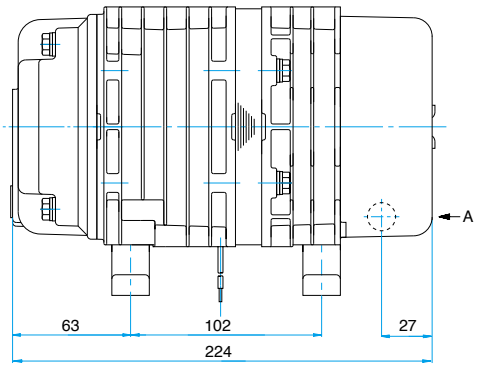

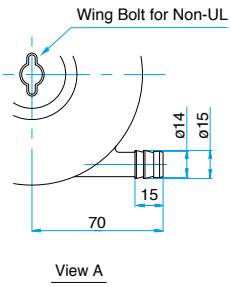

Compressor

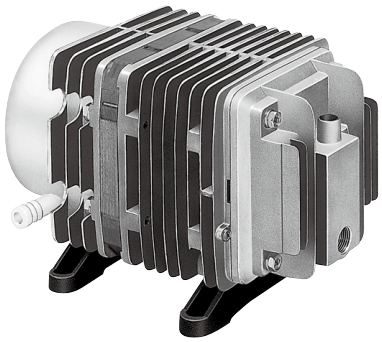

Model AC0902

115 V | 230 V | 230 V

Airflow & Power Consumption

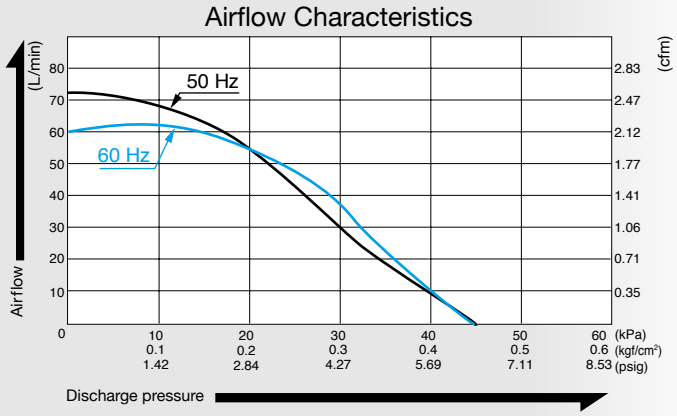

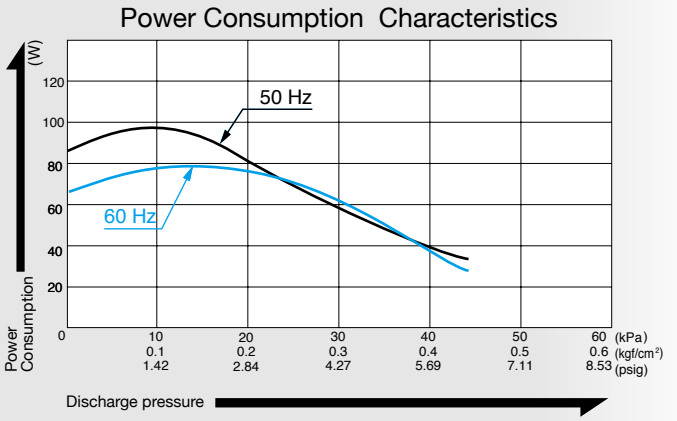

Specifications

Rated Pressure	20 kPa (0.2 kgf/cm²) 0.2 bar 2.84 psig	
Rated Airflow	55 L/min 1.94 cfm	
Maximum Pressure	45 kPa (0.45 kgf/cm²) 0.45 bar 6.40 psig	
Rated Voltage	115 V AC	230 V AC
Power Consumption	75 W	85 W
Rated Frequency	60 Hz	50 Hz
Rated Performance	10,000 hours	
Outlet	ISO Rc 3/8	
Duty Cycle	Continuous	
Coil Insulation Class	Class B for UL	Class E equivalent
Mounting Dimensions	102 (L) x 130 (W) mm 4 - 1/64" (L) x 5 - 1/8" (W)	
Weight	4.9 kg 10.8 Lbs	
Leadwire Length	300 mm 11 - 13/16"	320 mm 12 - 19/32"

Application Examples

Air Lifter for Bathtub

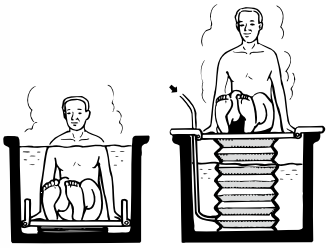

Liquid Dispenser

External Dimensions (Unit: mm)

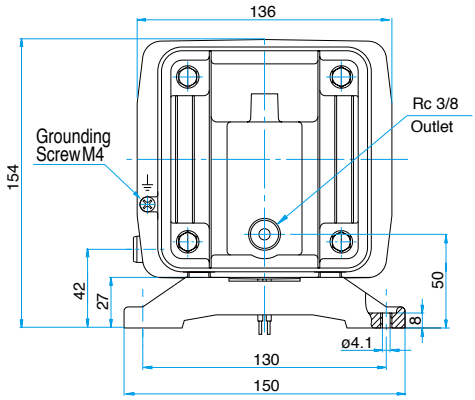

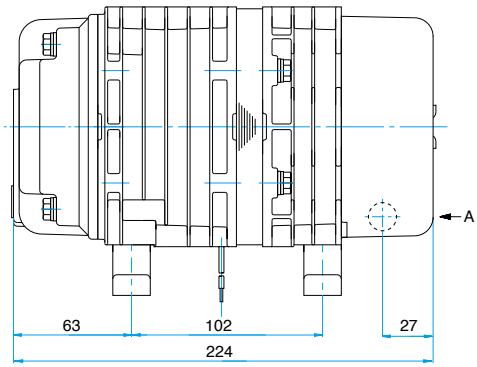

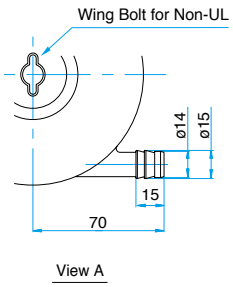

Compressor

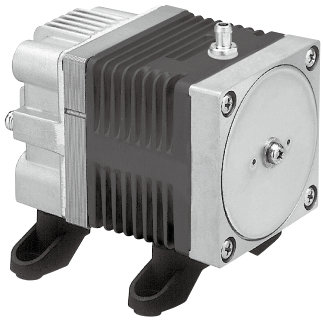

Model AC0105

115 V | 230 V | 230 V

Airflow & Power Consumption

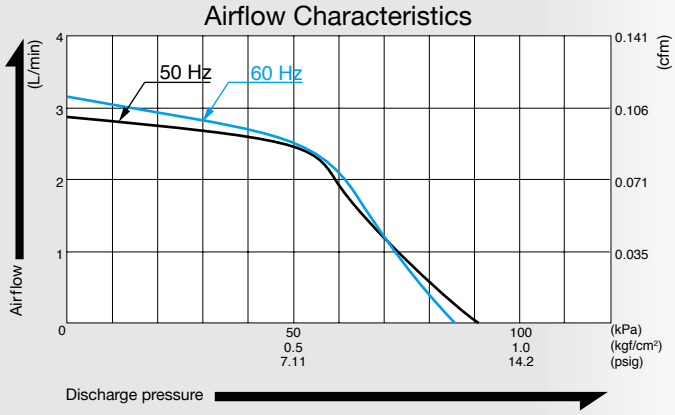

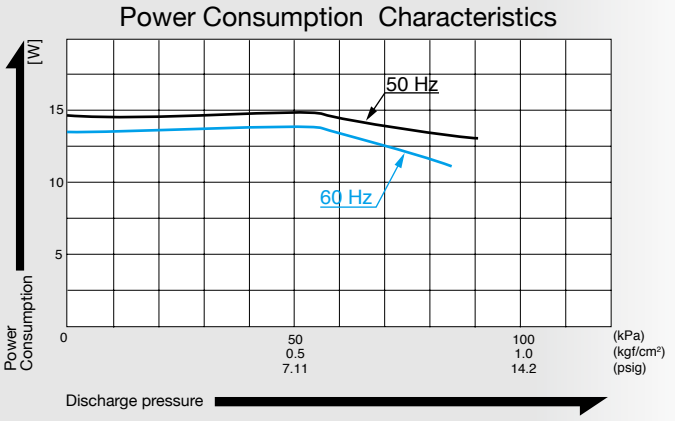

Specifications

Rated Pressure	50 kPa (0.5 kgf/cm²) 0.5 bar 7.11 psig	
Rated Airflow	2.5 L/min 0.088 cfm	
Maximum Pressure	80 kPa (0.8 kgf/cm²) 0.8 bar 11.4 psig	
Rated Voltage	115 V AC	230 V AC
Power Consumption	14 W	15 W
Rated Frequency	60 Hz	50 Hz
Rated Performance (MTTF)	5,000 hours	
Outlet	6 mm O.D. hose barb	
Duty Cycle	60 minutes	
Coil Insulation Class	Class B for UL	Class E equivalent
Mounting Dimensions	48 (L) x 62 (W) mm 1 - 57/64" (L) x 2 - 7/16" (W)	
Weight	0.7 kg 1.54 Lbs	
Leadwire Length	200 mm 7 - 7/8"	

Application Examples

Saline Water Splasher

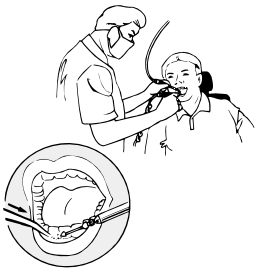

Copy Paper Separator

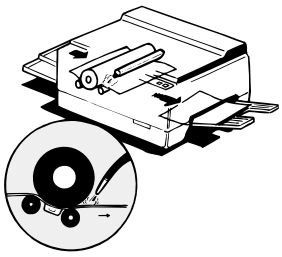

External Dimensions (Unit: mm)

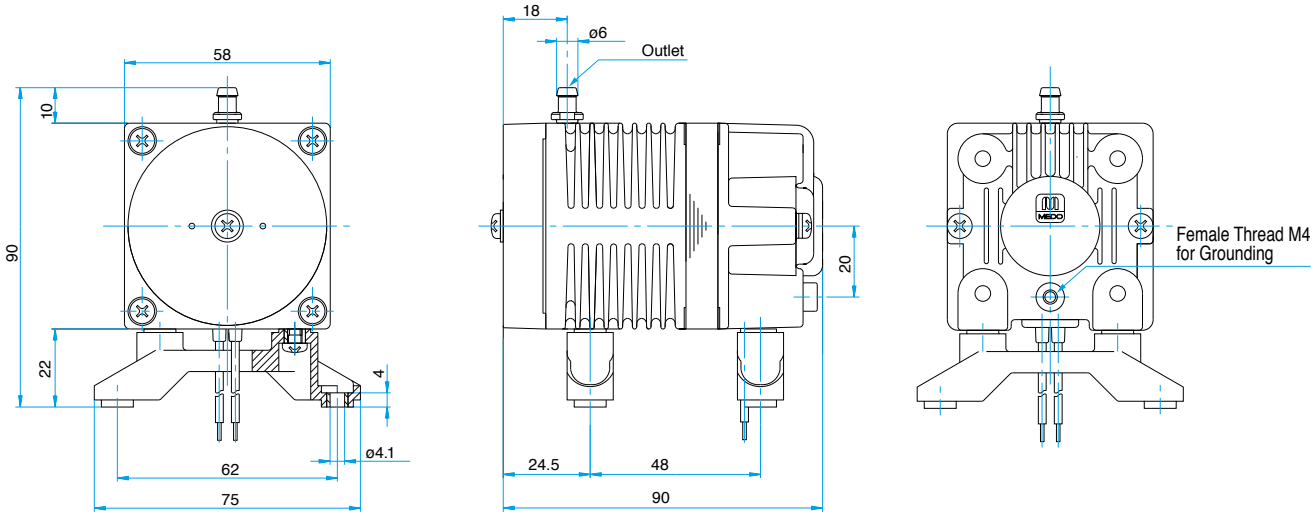

Compressor

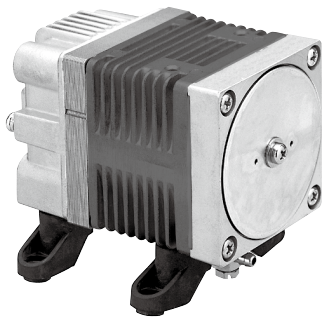

Model AC0110

115 V | 230 V | 230 V

Airflow & Power Consumption

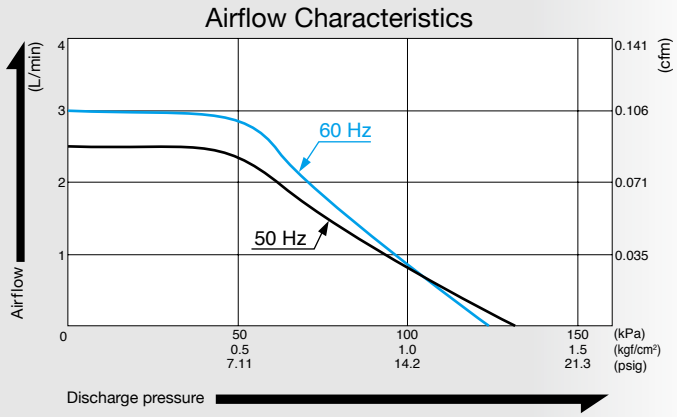

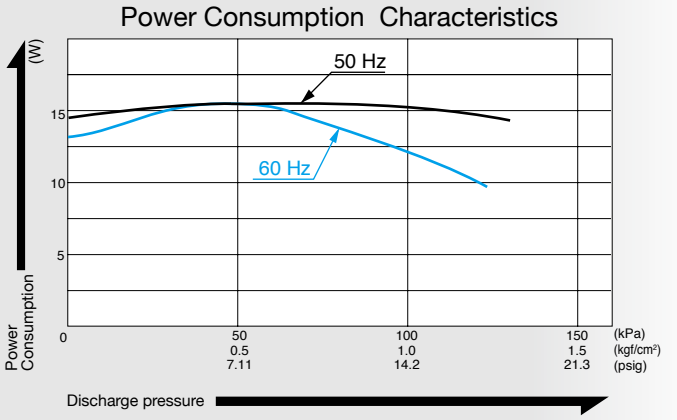

Specifications

Rated Pressure	100 kPa (1.0 kgf/cm²) 1.0 bar 14.2 psig	
Rated Airflow	1.0 L/min 0.035 cfm	0.8 L/min 0.028 cfm
Maximum Pressure	130 kPa (1.3 kgf/cm²) 1.3 bar 18.5 psig	120 kPa (1.2 kgf/cm²) 1.2 bar 17.1 psig
Rated Voltage	115 V AC	230 V AC
Power Consumption	12 W	15 W
Rated Frequency	60 Hz	50 Hz
Rated Performance (MTTF)	4,000 hours	
Outlet	6 mm O.D. hose barb	
Duty Cycle	30 minutes	
Coil Insulation Class	Class B for UL	Class E equivalent
Mounting Dimensions	48.5 (L) x 62 (W) mm 1 - 29/32" (L) x 2 - 7/16" (W)	48 (L) x 62 (W) mm 1 - 57/64" (L) x 2 - 7/16" (W)
Weight	0.7 kg 1.54 Lbs	
Leadwire Length	200 mm 7 - 7/8"	

Application Examples

Automatic Dispenser

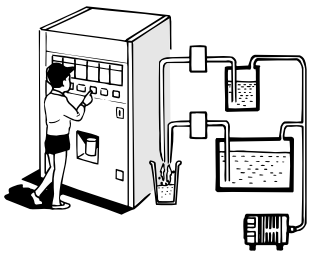

External Dimensions (Unit: mm)

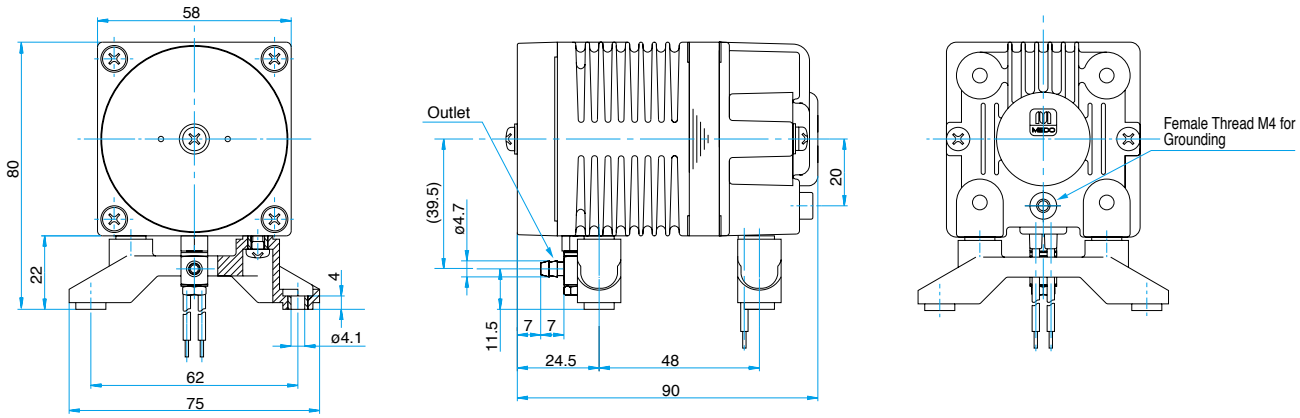

Compressor

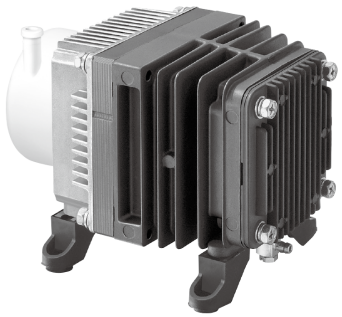

Model AC0207

115 V | 230 V | 230 V

Airflow & Power Consumption

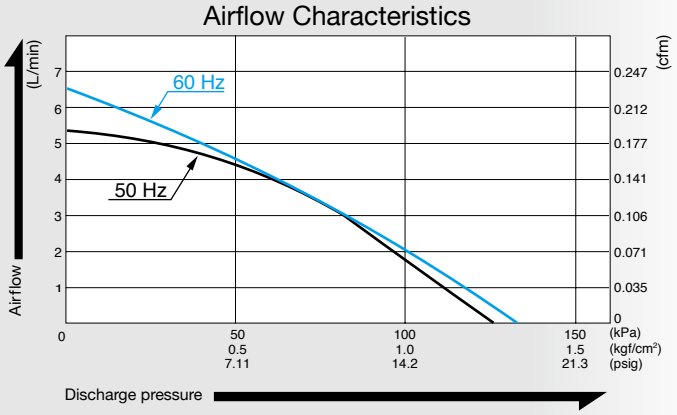

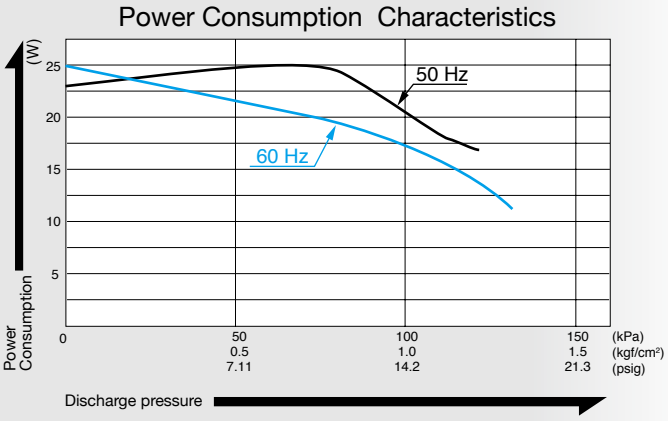

Specifications

Rated Pressure	70 kPa (0.7 kgf/cm²) 0.7 bar 9.96 psig	
Rated Airflow	3.5 L/min 0.124 cfm	
Maximum Pressure	100 kPa (1.0 kgf/cm²) 1.0 bar 14.2 psig	
Rated Voltage	115 V AC	230 V AC
Power Consumption	20 W	25 W
Rated Frequency	60 Hz	50 Hz
Rated Performance	3,000 hours	
Outlet	4.7 mm O.D. hose barb	
Duty Cycle	Continuous	
Coil Insulation Class	Class B for UL	Class E equivalent
Mounting Dimensions	75 (L) x 88 (W) mm 2 - 61/64" (L) x 3 - 15/32" (W)	
Weight	1.7 kg 3.7 Lbs	
Leadwire Length	200 mm 7 - 7/8"	

Application Examples

Air Bearing for Precision Machines

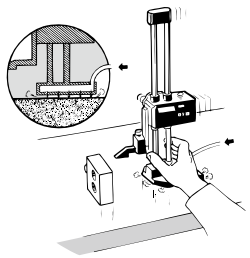

Nebulizer

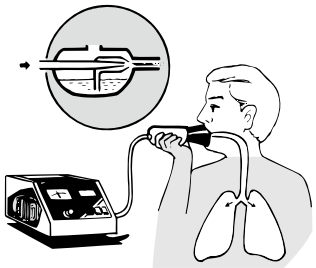

External Dimensions (Unit: mm)

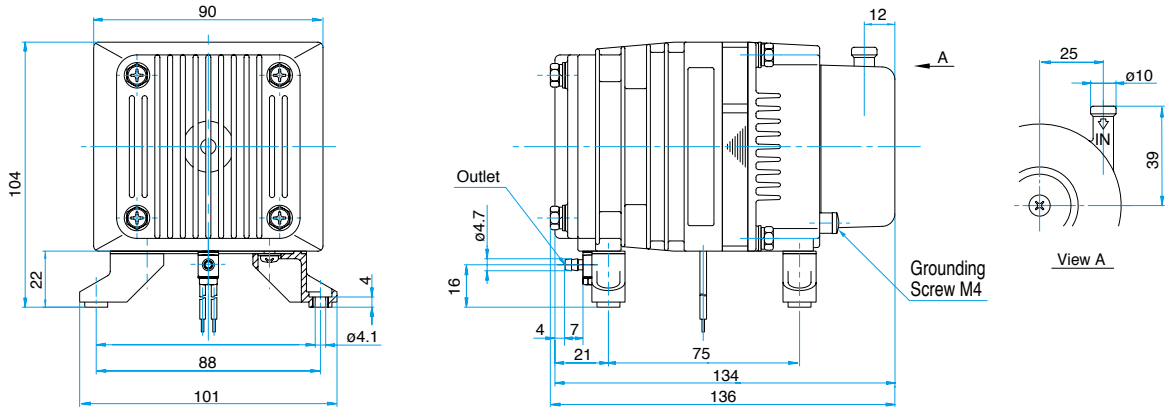

Compressor

Model AC0410A

115 V is made to order

CE 230 V | UKCA 230 V

Airflow & Power Consumption

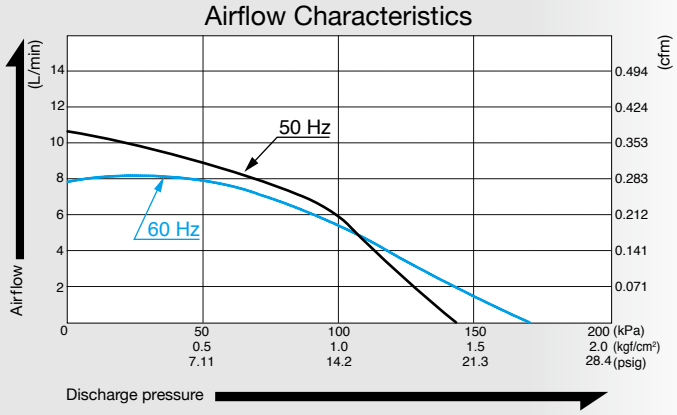

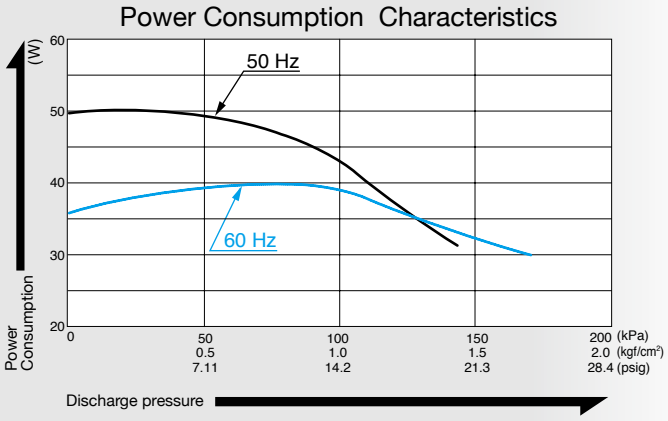

Specifications

Rated Pressure	100 kPa (1.0 kgf/cm²) 1.0 bar 14.2 psig	
Rated Airflow	5 L/min 0.177 cfm	
Maximum Pressure	130 kPa (1.3 kgf/cm²) 1.3 bar 18.5 psig	
Rated Voltage	115 V AC	230 V AC
Power Consumption	39 W	43 W
Rated Frequency	60 Hz	50 Hz
Rated Performance	3,000 hours	
Outlet	ISO Rc 1/4	
Duty Cycle	Continuous	
Coil Insulation Class	Class B equivalent	
Mounting Dimensions	68 (L) x 98 (W) mm 2 - 43/64" (L) x 3 - 55/64" (W)	
Weight	2.1 kg 4.6 Lbs	
Leadwire Length	220 mm 8 - 21/32"	170 mm 6 - 11/16"

Application Examples

Industrial Sewing Machine

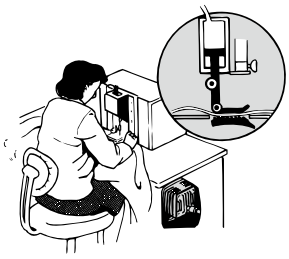

Various Aerosol Sprays

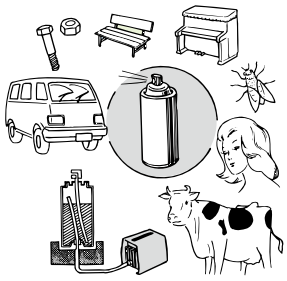

External Dimensions (Unit: mm)

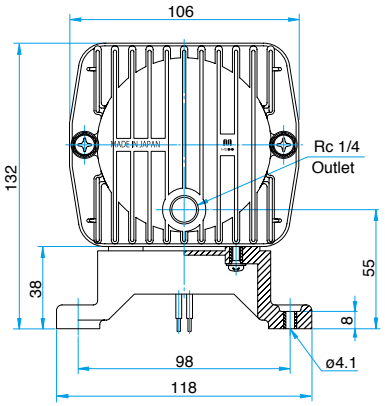

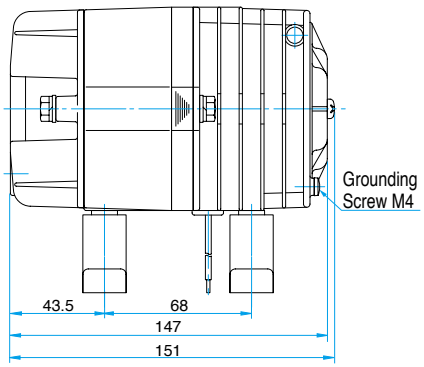

Compressor

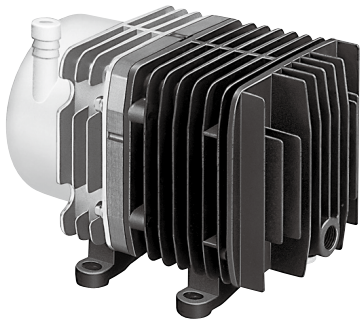

Model AC0610

115 V | 230 V | 230 V

Airflow & Power Consumption

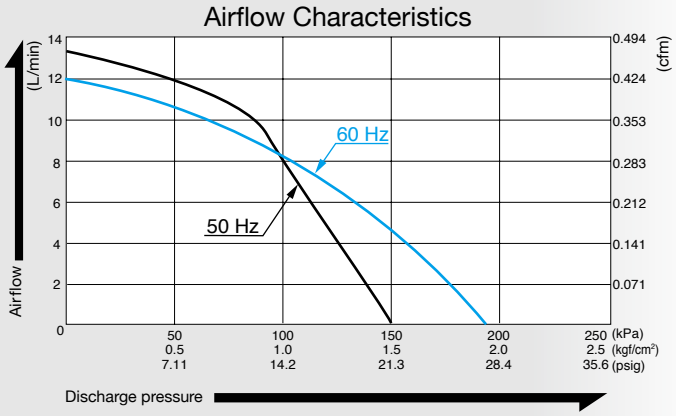

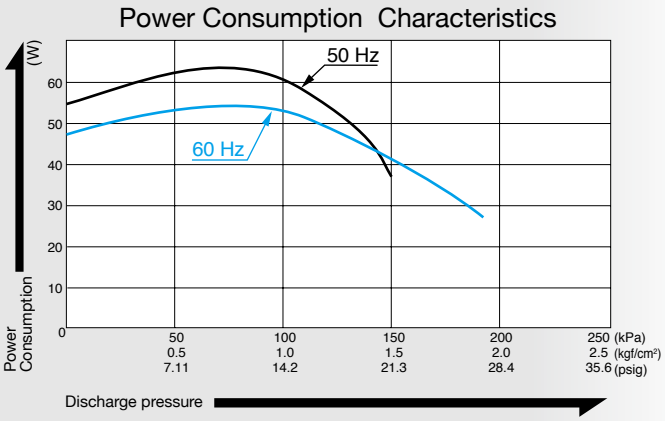

Specifications

Rated Pressure	100 kPa (1.0 kgf/cm²) 1.0 bar 14.2 psig	
Rated Airflow	8 L/min 0.283 cfm	
Maximum Pressure	150 kPa (1.5 kgf/cm²) 1.5 bar 21.3 psig	
Rated Voltage	115 V AC	230 V AC
Power Consumption	52 W	60 W
Rated Frequency	60 Hz	50 Hz
Rated Performance	3,000 hours	
Outlet	ISO Rc 1/4	
Duty Cycle	Continuous	
Coil Insulation Class	Class B for UL	Class E equivalent
Mounting Dimensions	68 (L) x 84 (W) mm 2 - 43/64" (L) x 3 - 5/16" (W)	
Weight	3.2 kg 7.1 Lbs	
Leadwire Length	200 mm 7 - 7/8"	

Application Examples

Dispenser

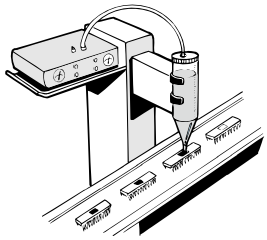

Automatic Stamper

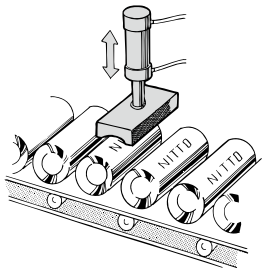

External Dimensions (Unit: mm)

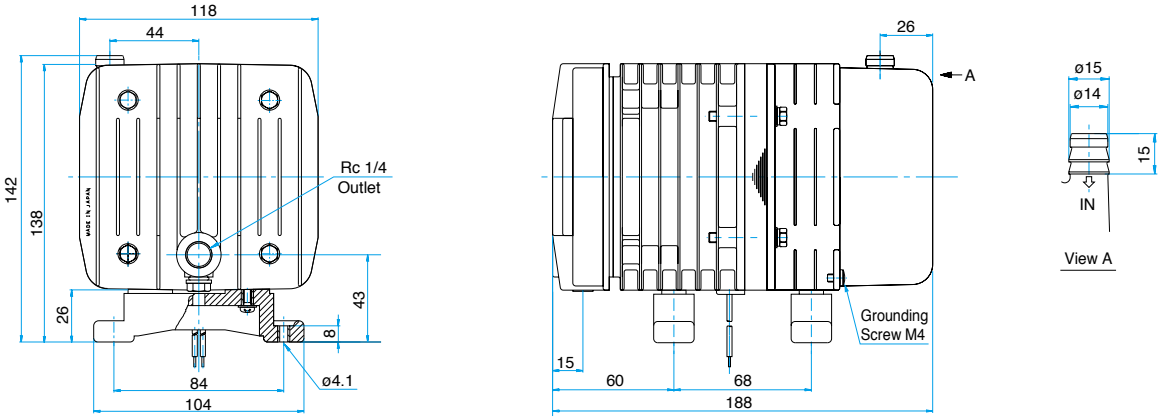

Compressor

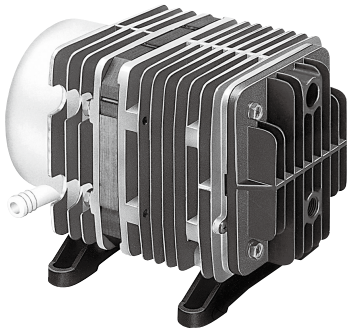

Model AC0910

115 V/230 V | 230 V | 230 V

Airflow & Power Consumption

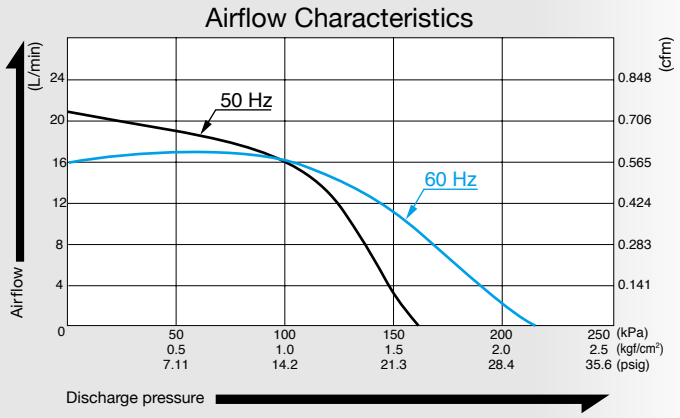

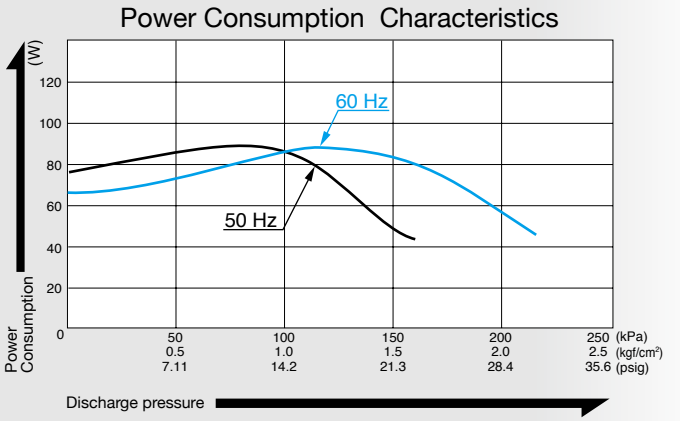

Specifications

Rated Pressure	100 kPa (1.0 kgf/cm²) 1.0 bar 14.2 psig	
Rated Airflow	16 L/min 0.57 cfm	
Maximum Pressure	150 kPa (1.5 kgf/cm²) 1.5 bar 21.3 psig	
Rated Voltage	115 V AC	230 V AC
Power Consumption	85 W	90 W
Rated Frequency	60 Hz	50 Hz
Rated Performance	3,000 hours	
Outlet	ISO Rc 1/4	
Duty Cycle	Continuous	
Coil Insulation Class	Class B for UL	
Mounting Dimensions	102 (L) x 130 (W) mm 4 - 1/64" (L) x 5 - 1/8" (W)	
Weight	4.9 kg 10.8 Lbs	
Leadwire Length	300 mm 11 - 13/16"	320 mm 12 - 19/32"

Application Examples

Sealant gun

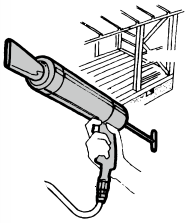

Air Cylinder /Chuck Driver

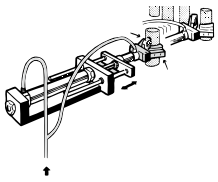

Leakage Tester

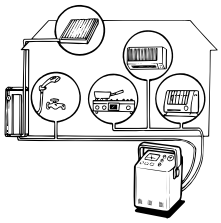

External Dimensions (Unit: mm)

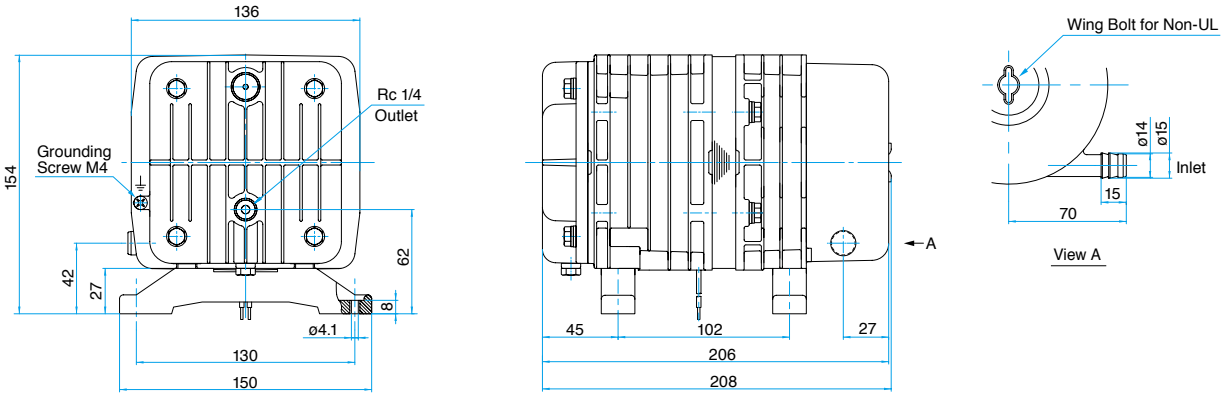

Compressor

Model AC0920

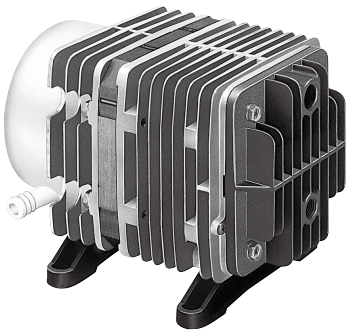

115 V (60 Hz) | 230 V (50 Hz) | 230 V (50 Hz)

Airflow & Power Consumption

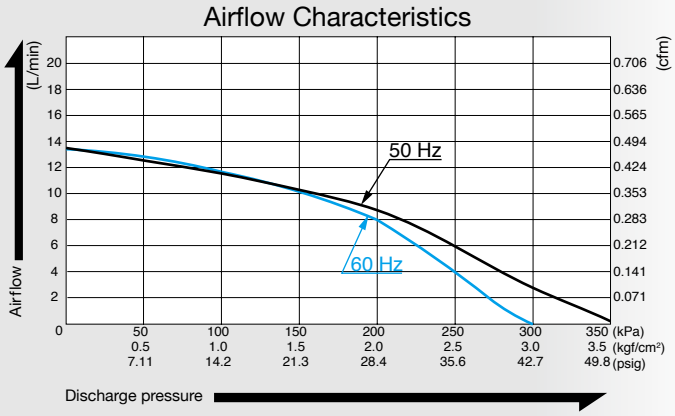

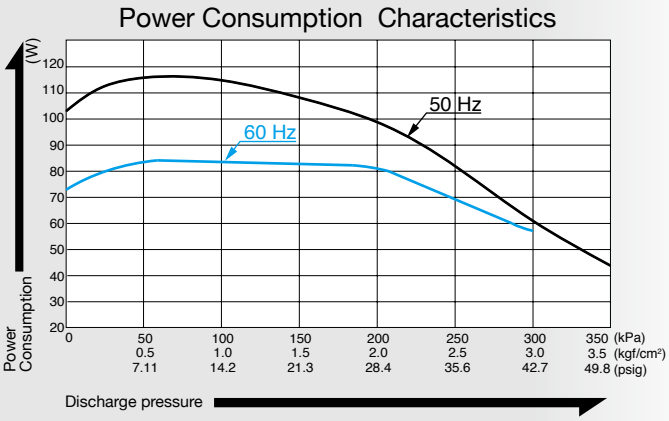

Specifications

Rated Pressure	200 kPa (2.0 kgf/cm²) 2.0 bar 28.4 psig	
Rated Airflow	8 L/min 0.283 cfm	
Maximum Pressure	280 kPa (2.8 kgf/cm²) 2.8 bar 39.8 psig	350 kPa (3.5 kgf/cm²) 3.4 bar 49.7 psig
Rated Voltage	115 V AC	230 V AC
Power Consumption	81 W	100 W
Rated Frequency	60 Hz	50 Hz
Rated Performance	3,000 hours	
Outlet	ISO Rc 1/4	
Duty Cycle	30 minutes	
Coil Insulation Class	Class B for UL	Class E equivalent
Mounting Dimensions	102 (L) x 130 (W) mm 4 - 1/64" (L) x 5 - 1/8" (W)	
Weight	4.9 kg 10.8 Lbs	5 kg 11 Lbs
Leadwire Length	300 mm 11 - 13/16"	320 mm 12 - 19/32"

Application Examples

Air Cylinder/Chuck Driver

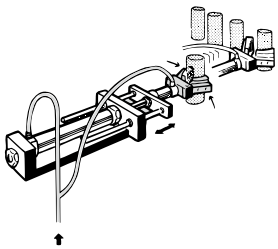

Leakage Tester

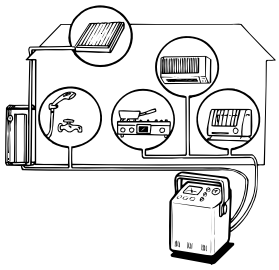

External Dimensions (Unit: mm)

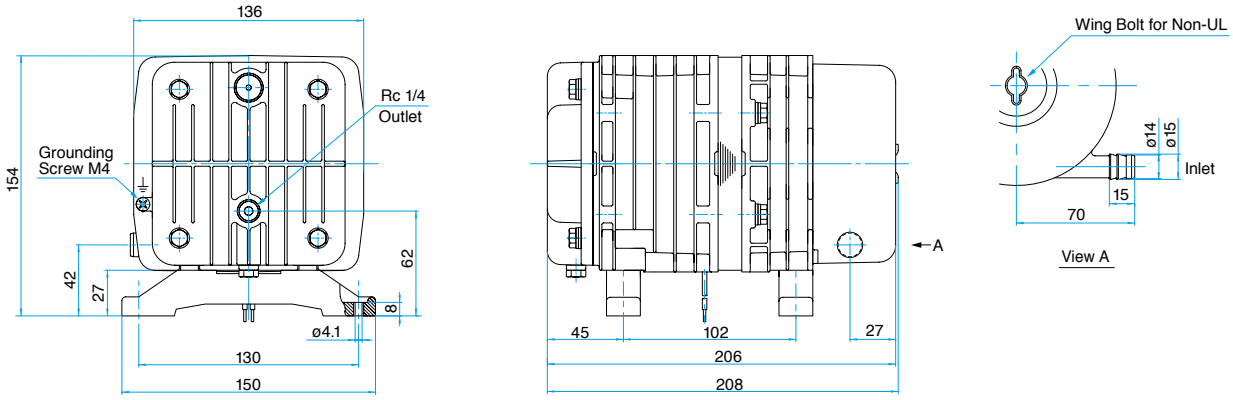

AC LINEAR
Free Piston Vacuum Pump

VACUUM PUMP

VP series

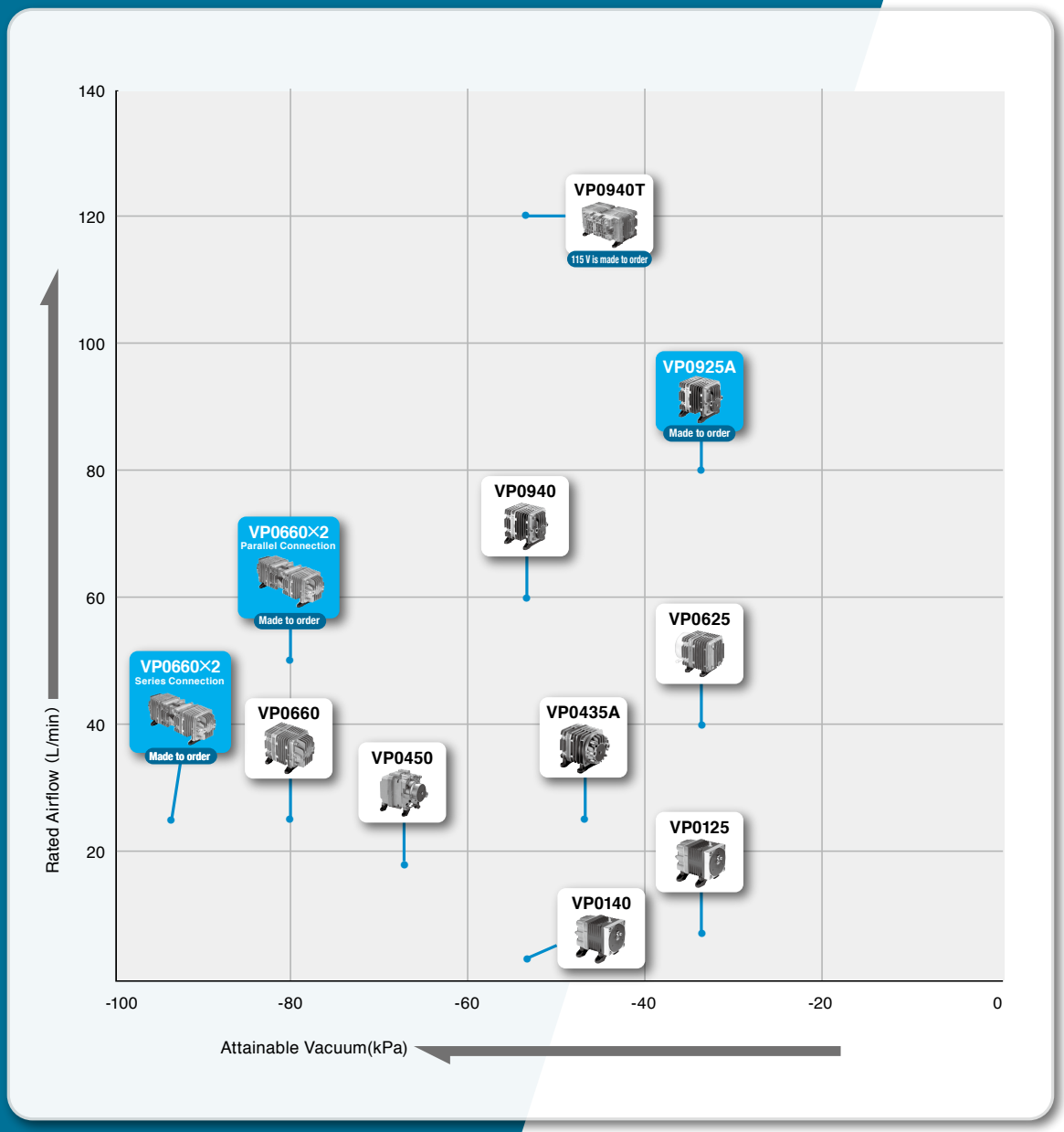

Page

VP0125 — 29
VP0140 — 30
VP0435A — 31
VP0450 — 32
VP0625 — 33
VP0660 — 34
VP0940 — 35
VP0940T — 36

Made to Order

VP0925A — 103
VP0660 x 2 — 104

Vacuum Pump

Model VP0125

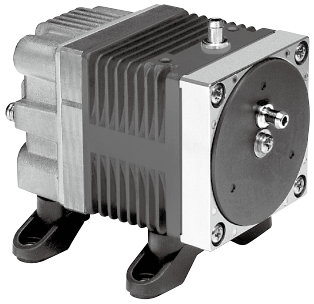

115 V/230 V | 230 V | 230 V

Airflow & Power Consumption

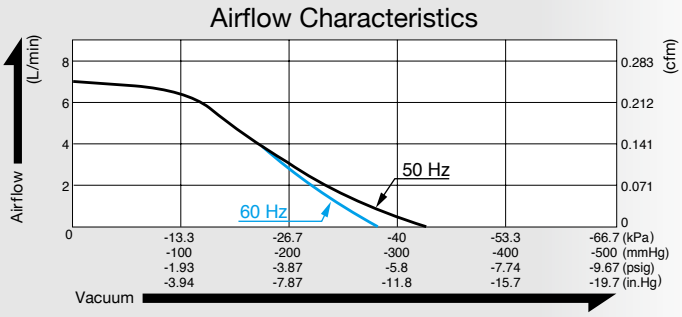

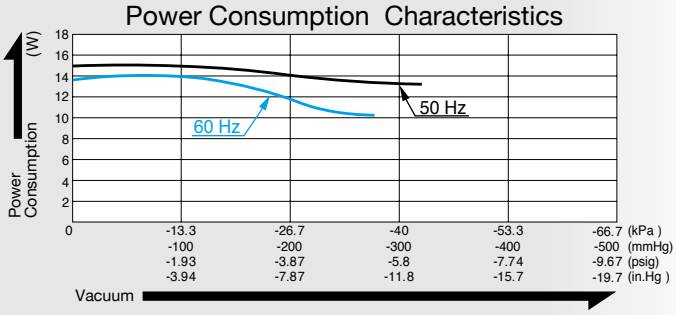

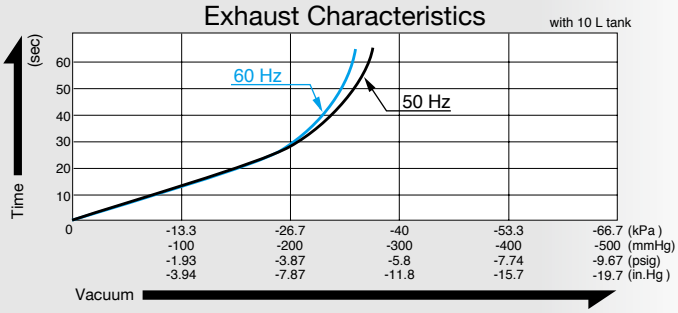

Specifications

Attainable Vacuum	-33.3 kPa (-250 mmHg) -333 mbar -9.84 in. Hg	
Free Air Displacement	7 L/min 0.247 cfm	
Rated Voltage	115 V AC	230 V AC
Power Consumption	14 W	15 W
Rated Frequency	60 Hz	50 Hz
Rated Performance (MTTF)	10,000 hours	
Inlet	6 mm O.D. hose barb	
Outlet	6 mm O.D. hose barb	
Duty Cycle	Continuous	
Coil Insulation Class	Class B for UL	
Mounting Dimensions	48 (L) x 62 (W) mm 1 - 57/64" (L) x 2 - 7/16" (W)	
Weight	0.7 kg 1.54 Lbs	
Leadwire Length	200 mm 7 - 7/8"	

Application Examples

Dripping Machine

Paper Card Dispenser

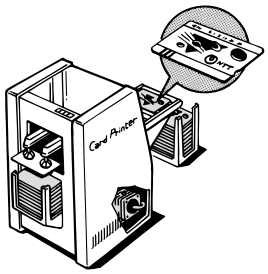

External Dimensions (Unit: mm)

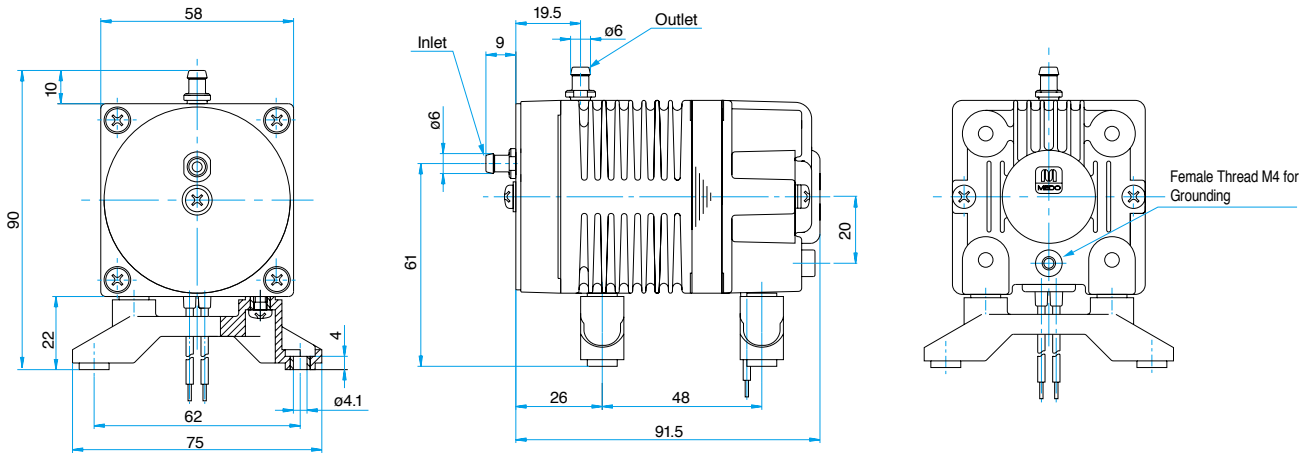

Vacuum Pump

Model VP0140

115 V | 230 V | 230 V

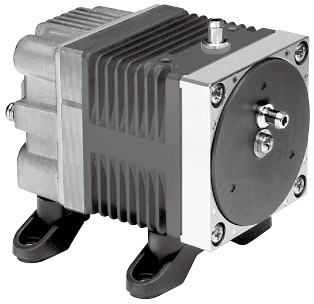

Airflow & Power Consumption

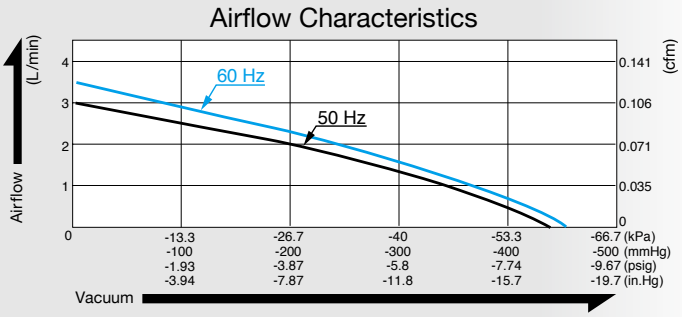

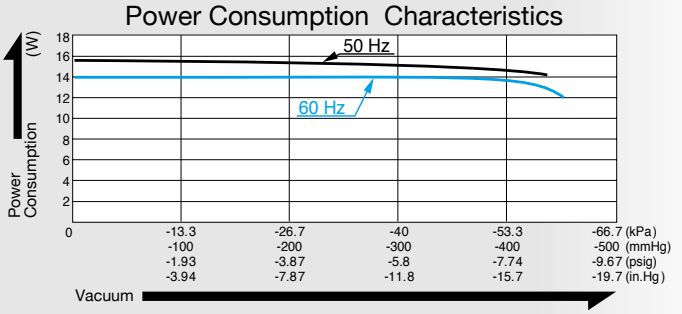

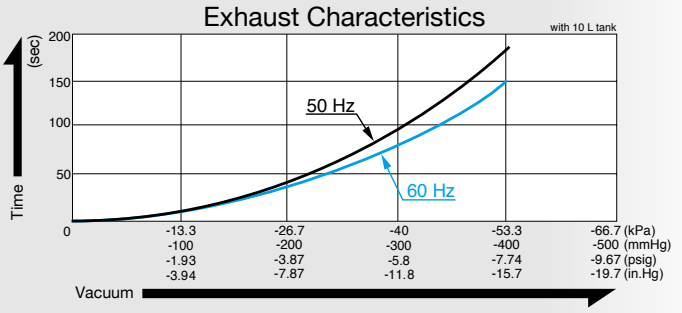

Specifications

Attainable Vacuum*	-53.3 kPa (-400 mmHg) -533 mbar -15.7 in. Hg	
Free Air Displacement	3 L/min 0.106 cfm	
Rated Voltage	115 V AC	230 V AC
Power Consumption	14 W	15 W
Rated Frequency	60 Hz	50 Hz
Rated Performance (MTTF)	5,000 hours	
Inlet	6 mm O.D. hose barb	
Outlet	6 mm O.D. hose barb	
Duty Cycle	60 minutes	
Coil Insulation Class	Class B for UL	Class E equivalent
Mounting Dimensions	48 (L) x 62 (W) mm 1 - 57/64" (L) x 2 - 7/16" (W)	
Weight	0.7 kg 1.54 Lbs	
Leadwire Length	200 mm 7 - 7/8"	

*Operations at higher than -53.5 kPa need an additional leak valve or relief valve on the inlet piping.

Application Examples

Dripping Machine

Paper Card Dispenser

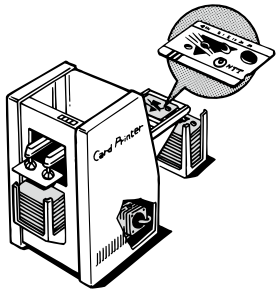

External Dimensions (Unit: mm)

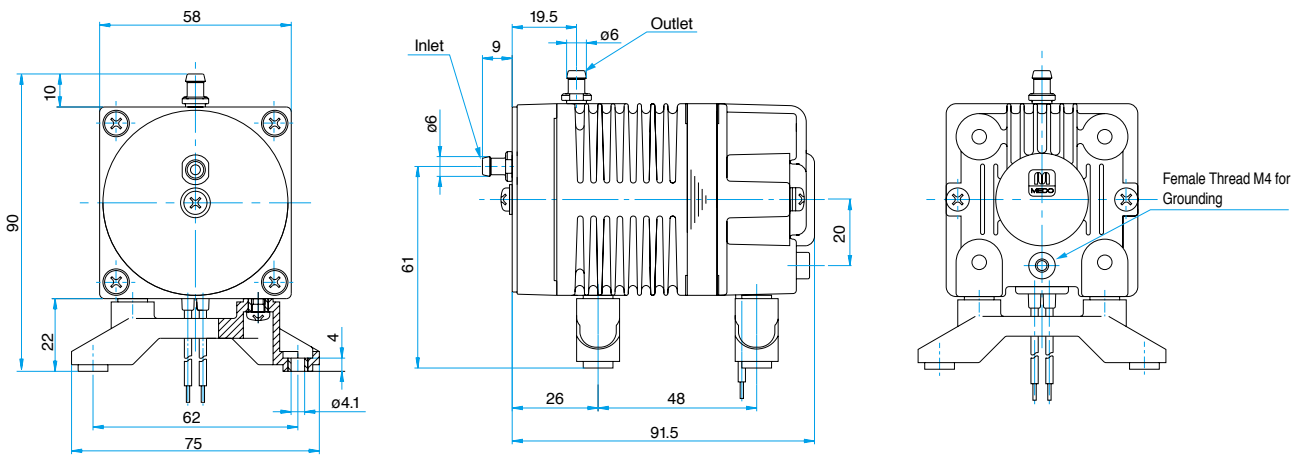

Vacuum Pump

Model VP0435A

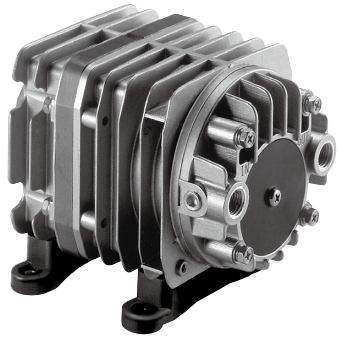

115 V | 230 V | 230 V

Airflow & Power Consumption

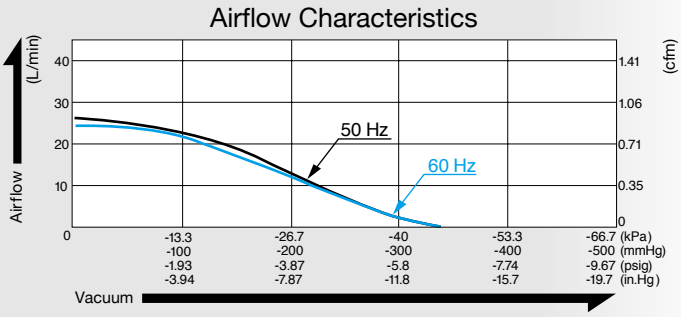

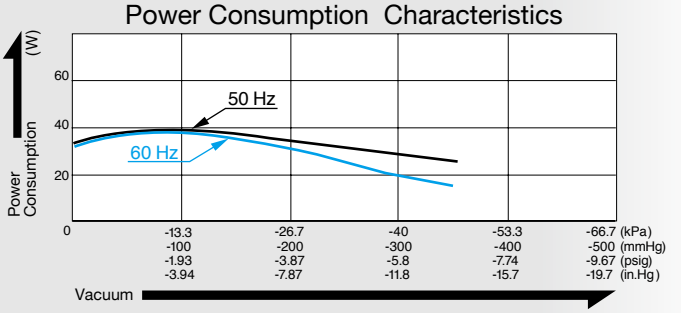

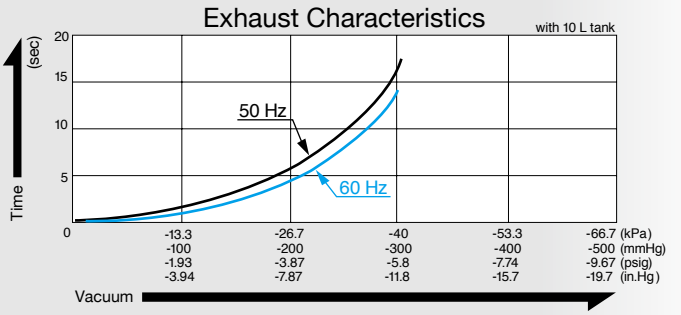

Specifications

Attainable Vacuum	-46.7 kPa (-350 mmHg) -467 mbar -13.8 in. Hg	
Free Air Displacement	25 L/min 0.88 cfm	
Rated Voltage	115 V AC	230 V AC
Power Consumption	39 W	
Rated Frequency	60 Hz	50 Hz
Rated Performance	3,000 hours	
Inlet	15 mm O.D. hose barb	
Outlet	ISO Rc 1/4	
Duty Cycle	Continuous	
Coil Insulation Class	Class B for UL	Class B equivalent
Mounting Dimensions	68 (L) x 84 (W) mm 2 - 43/64" (L) x 3 - 5/16" (W)	
Weight	2.3 kg 5.1 Lbs	
Leadwire Length	300 mm 11 - 13/16"	550 mm 21 - 21/32"

Application Examples

Machine Screw Feeder

Air Sampler

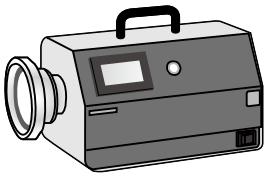

External Dimensions (Unit: mm)

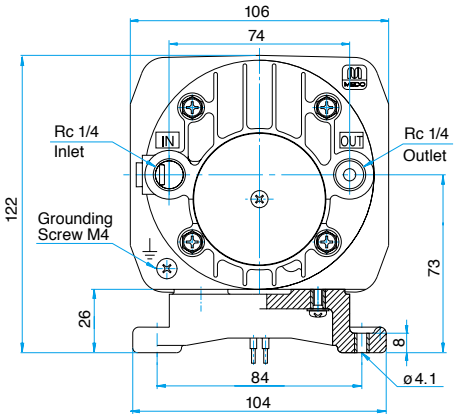

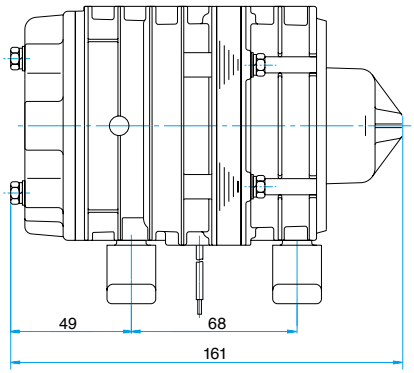

Vacuum Pump

Model VP0450

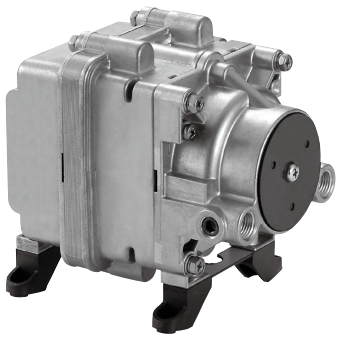

120 V | 230 V | 230 V

Airflow & Power Consumption

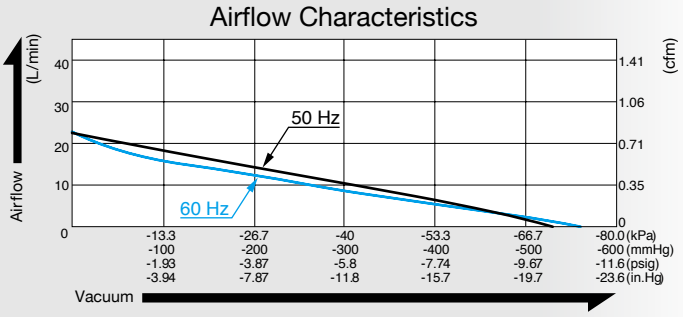

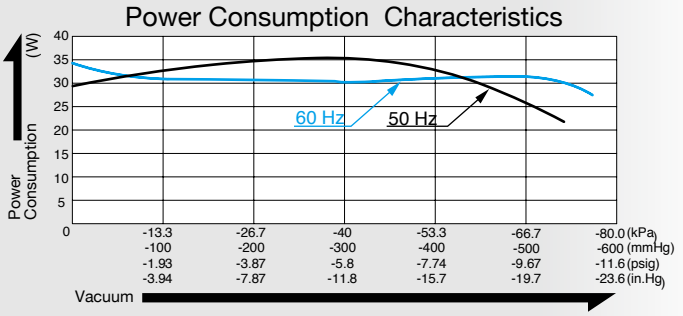

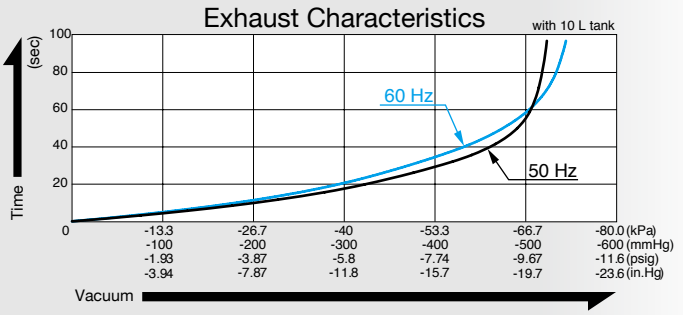

Specifications

Attainable Vacuum	-66.7 kPa (-500 mmHg) -667 mbar -19.7 in. Hg	
Free Air Displacement	18 L/min 0.64 cfm	
Rated Voltage	120 V AC	230 V AC
Power Consumption	34 W	35 W
Rated Frequency	60 Hz	50 Hz
Rated Performance	10,000 hours	
Inlet	ISO Rc 1/4	
Outlet	ISO Rc 1/4	
Duty Cycle	Continuous	
Coil Insulation Class	Class A for UL	Class E equivalent
Mounting Dimensions	85 (L) x 88 (W) mm 3 - 11/32" (L) x 3 - 15/32" (W)	
Weight	2.2 kg 4.9 Lbs	
Leadwire Length	300 mm 11 - 13/16"	

Application Examples

Machine Screw Feeder

Air Sampler

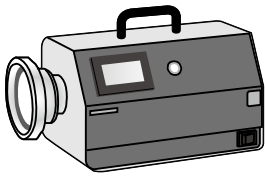

External Dimensions (Unit: mm)

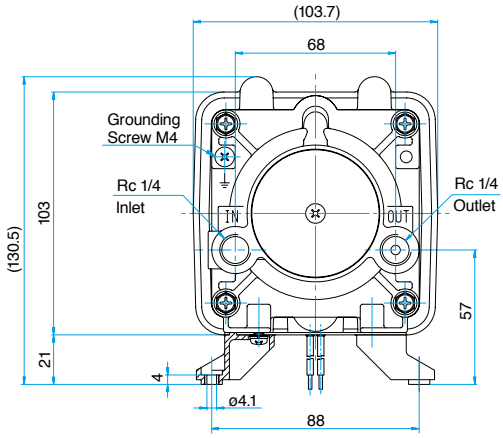

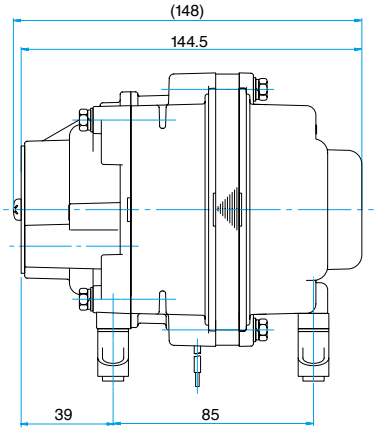

Vacuum Pump

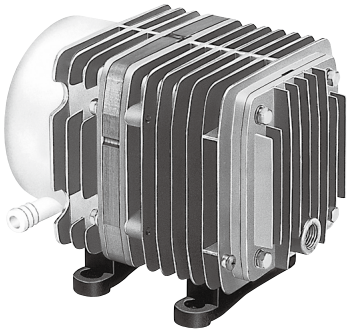

Model VP0625

115 V/230 V | 230 V | 230 V

Airflow & Power Consumption

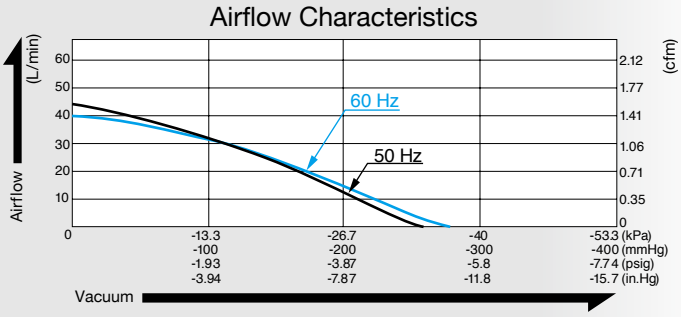

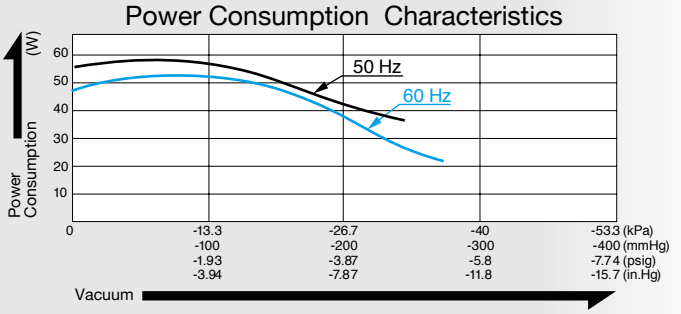

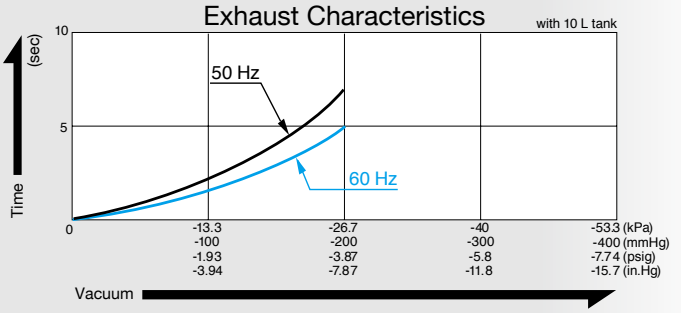

Specifications

Attainable Vacuum	-33.3 kPa (-250 mmHg) -333 mbar -9.84 in. Hg	
Free Air Displacement	40 L/min 1.41 cfm	
Rated Voltage	115 V AC	230 V AC
Power Consumption	60 W	
Rated Frequency	60 Hz	50 Hz
Rated Performance	10,000 hours	
Inlet	15mm O.D. hose barb	
Outlet	ISO Rc 1/4	
Duty Cycle	Continuous	
Coil Insulation Class	Class B for UL	
Mounting Dimensions	68 (L) x 84 (W) mm 2 - 43/64" (L) x 3 - 5/16" (W)	
Weight	3 kg 6.6 Lbs	
Leadwire Length	235 mm 9 - 1/4"	320 mm 12 - 19/32"

Application Examples

Microfiche Camera

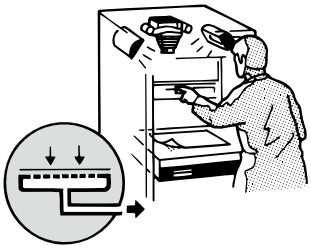

Solar Collection Screen

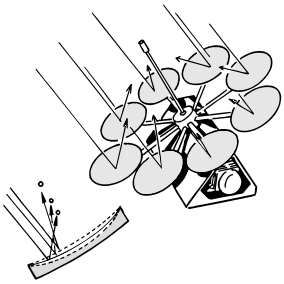

External Dimensions (Unit: mm)

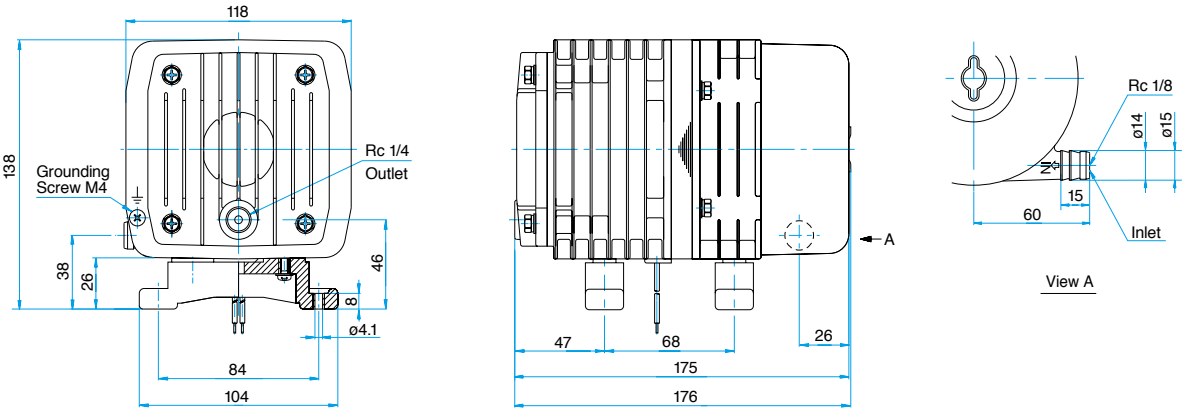

Vacuum Pump

Model VP0660

115 V (60 Hz) | 230 V (50 Hz) | 230 V (50 Hz)

Airflow & Power Consumption

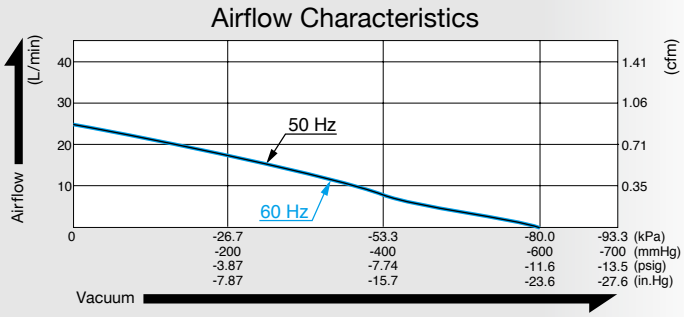

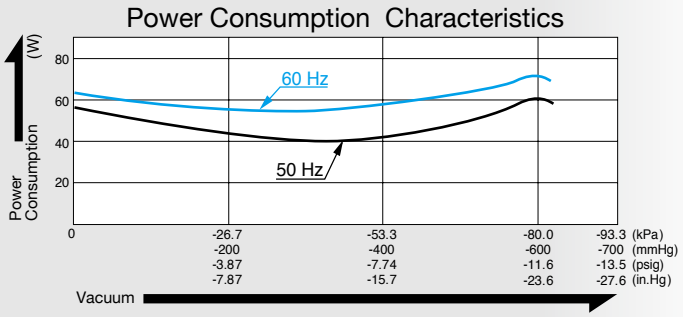

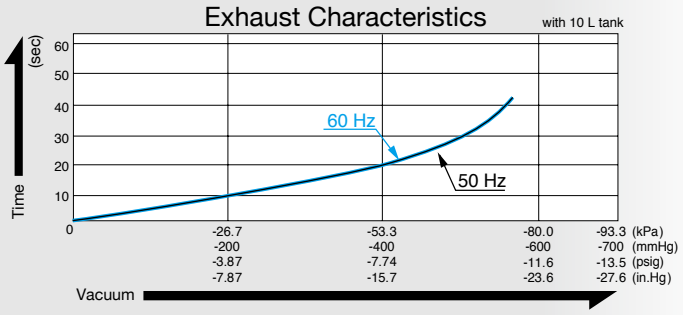

Specifications

Attainable Vacuum *1	-80 kPa (-600 mmHg) -800 mbar -23.6 in. Hg	
Free Air Displacement	25 L/min 0.88 cfm	
Rated Voltage	115 V AC	230 V AC
Power Consumption	70 W	60 W
Rated Frequency	60 Hz	50 Hz
Rated Performance	6,000 hours	
Inlet	ISO Rc 1/4	
Outlet	ISO Rc 1/4	
Duty Cycle	Continuous	
Coil Insulation Class	Class B for UL	Class E equivalent
Mounting Dimensions	102 (L) x 130 (W) mm 4 - 1/64" (L) x 5 - 1/8" (W)	
Weight	5 kg 11 Lbs	
Leadwire Length	300 mm 11 - 13/16"	600 mm 23 - 5/8"

*1: Operations at higher than -80 kPa need an additional leak valve or relief valve on the inlet piping.

Application Examples

Vacuum Material Handling Equipment

Vacuum Chucking

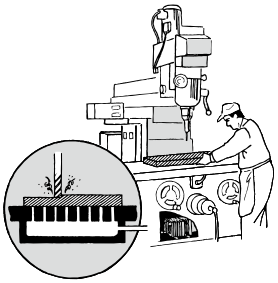

External Dimensions (Unit: mm)

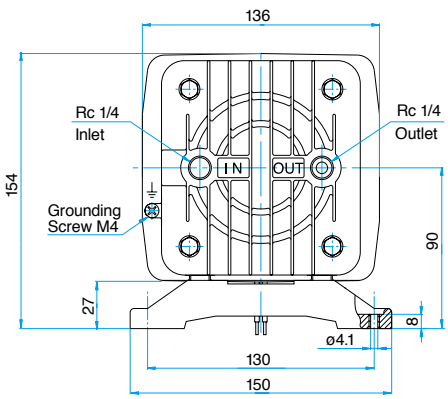

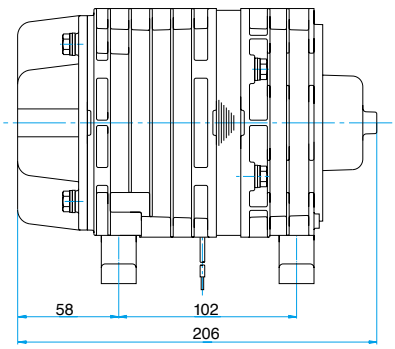

Vacuum Pump

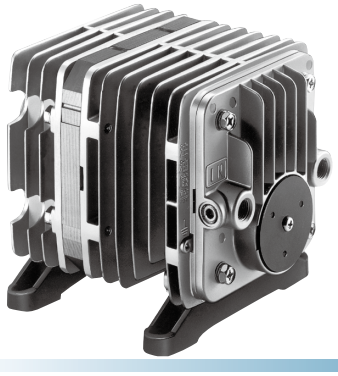

Model VP0940

115 V/230 V | 115 V/230 V | 115 V/230 V

Airflow & Power Consumption

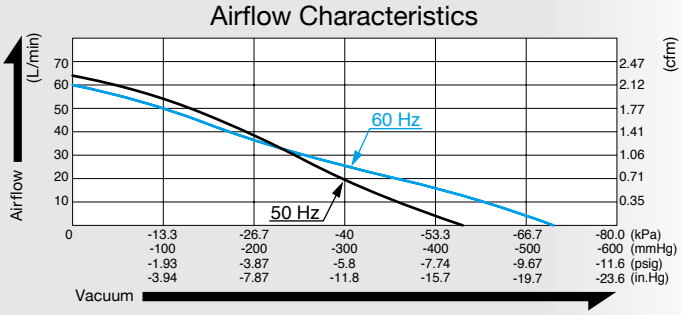

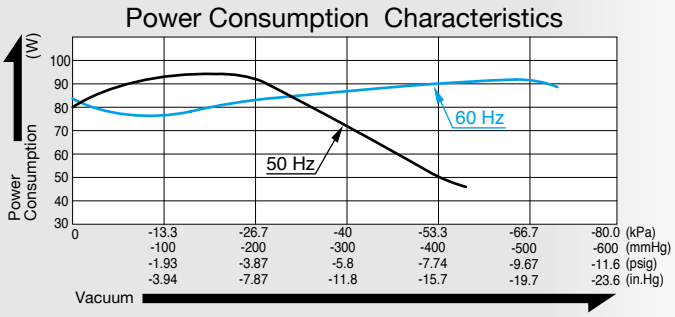

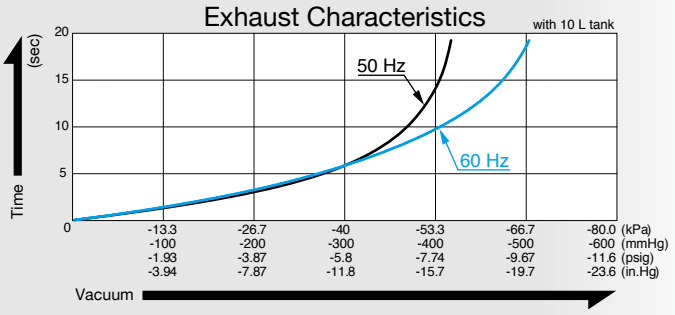

Specifications

Attainable Vacuum *1	-53.3 kPa (-400 mmHg) -533 mbar -15.7 in. Hg	
Free Air Displacement	60 L/min 2.12 cfm	
Rated Voltage	115 V AC	230 V AC
Power Consumption	95 W	
Rated Frequency	60 Hz	50 Hz
Rated Performance	10,000 hours	
Inlet	ISO Rc 1/4	
Outlet	ISO Rc 1/4	
Duty Cycle	Continuous	
Coil Insulation Class	Class B for UL	Class B equivalent
Mounting Dimensions	102 (L) x 130 (W) mm 4 - 1/64" (L) x 5 - 1/8" (W)	
Weight	4.55 kg 10.0 Lbs	
Leadwire Length	300 mm 11 - 13/16"	320 mm 12 - 19/32"

*1: Operations at higher than -53.3 kPa need an additional leak valve or relief valve on the inlet piping.

Application Examples

Label Sticking Machine

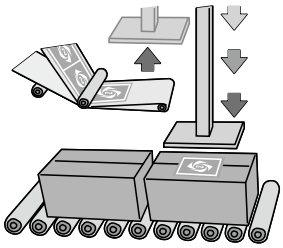

External Dimensions (Unit: mm)

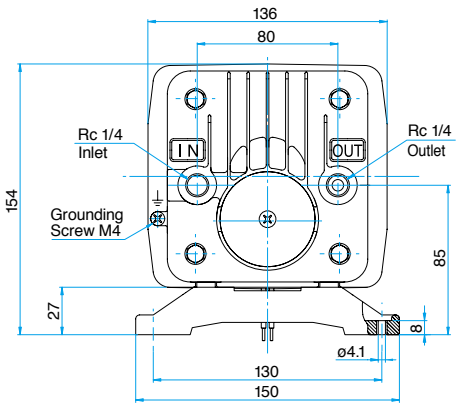

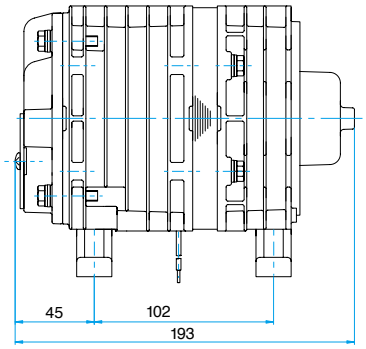

Vacuum Pump

Model VP0940T

115 V is made to order

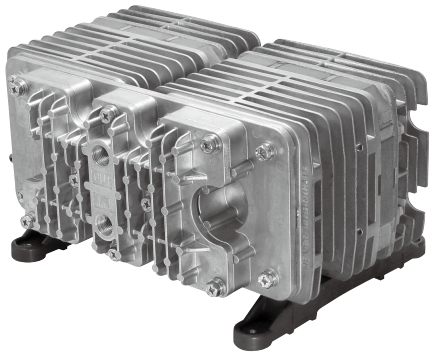

CE 230 V | UKCA 230 V

Airflow & Power Consumption

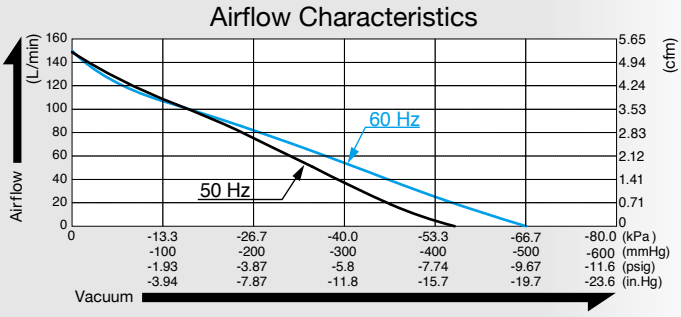

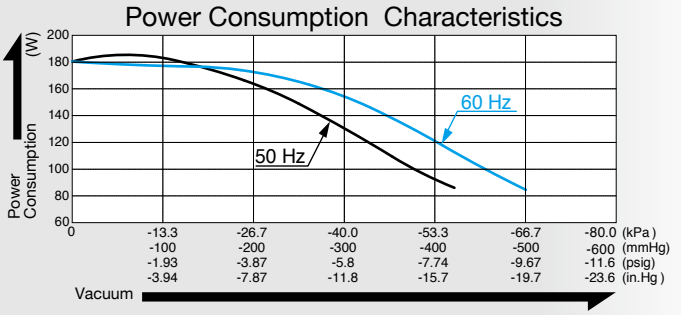

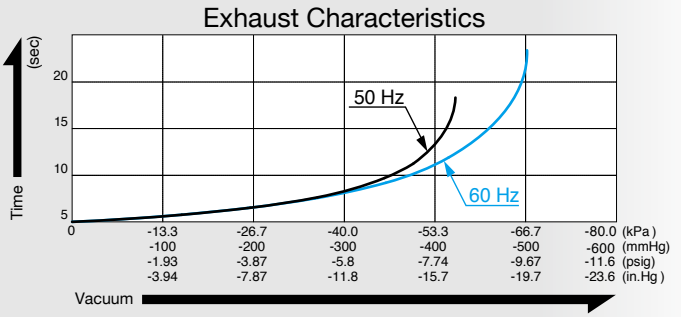

Specifications

Attainable Vacuum *1	-53.3 kPa (-400 mmHg) -533 mbar -15.7 in. Hg	
Free Air Displacement	120 L/min 4.24 cfm	
Rated Voltage	115 V AC	230 V AC
Power Consumption	185 W	
Rated Frequency	60 Hz	50 Hz
Rated Performance	10,000 hours	
Inlet	ISO Rc 3/8	
Outlet	ISO Rc 3/8	
Duty Cycle	Continuous	
Coil Insulation Class	Class B equivalent	
Mounting Dimensions	172 (L) x 211 (W) mm 6 - 49/64" (L) x 8 - 5/16" (W)	
Weight	10 kg 22 Lbs	
Leadwire Length	300 mm 11 - 13/16"	320 mm 12 - 19/32"

*1: Operations at higher than -53.3 kPa need an additional leak valve or relief valve on the inlet piping.

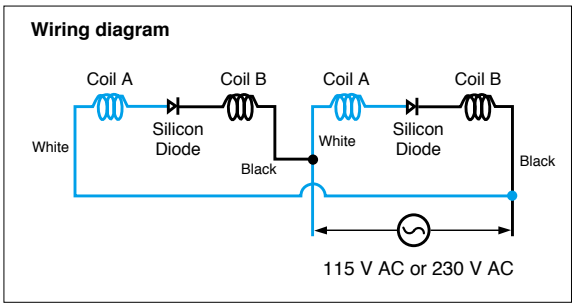

*The silencer, air filter, and pipe are not included with the product.
*Piping and wiring need to be done by the user.

External Dimensions (Unit: mm)

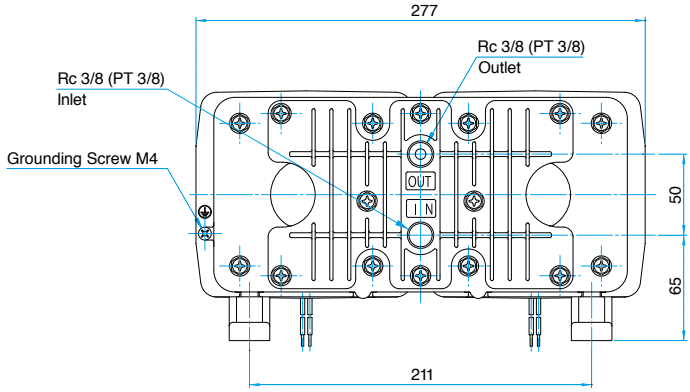

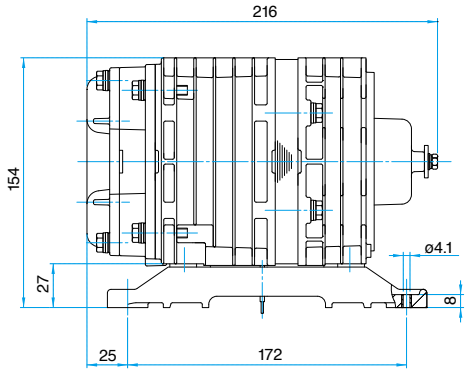

DC LINEAR
Free Piston Compressor

AIR COMPRESSOR

Page

DAH102-X1 — 39
DAH102-Y1 — 40
DAH105-X1 — 41
DAH105-Y1 — 42
DAH110-X1 — 43
DAH110-Y1 — 44

DAH series

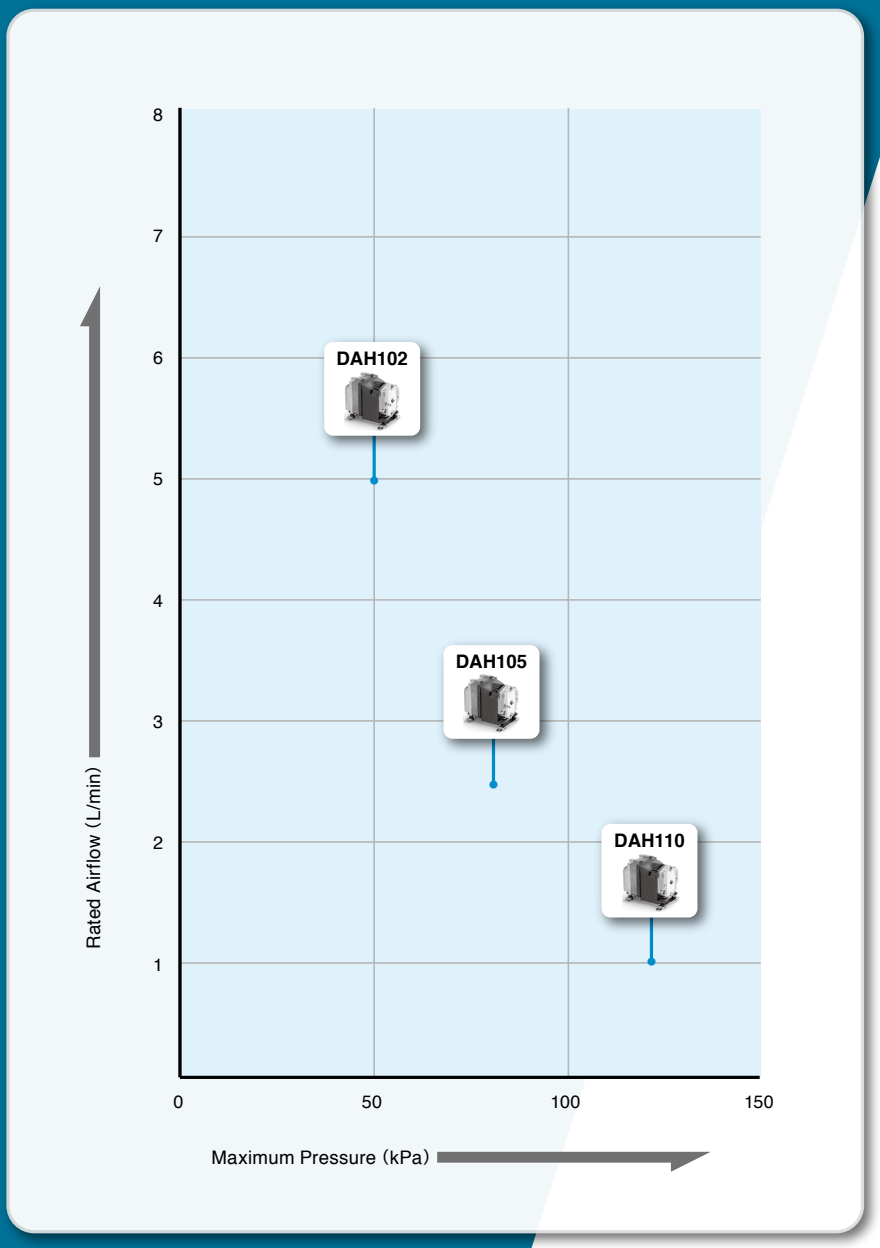

Compressor

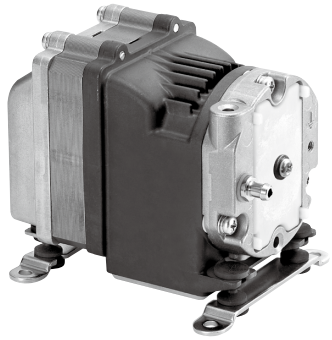

Model DAH102-X1

12 V DC

CE 12 V | UK CA 12 V

Airflow & Electric Current

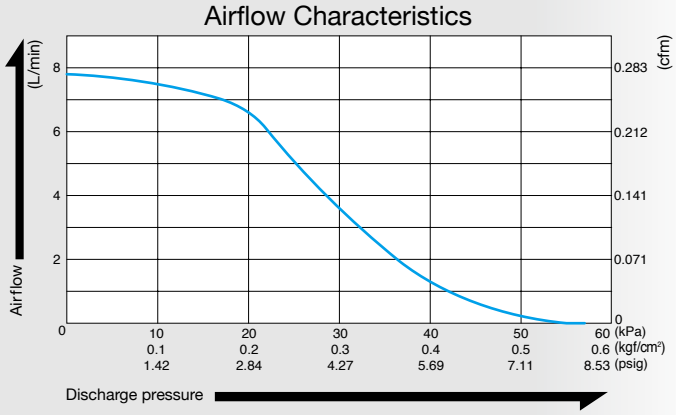

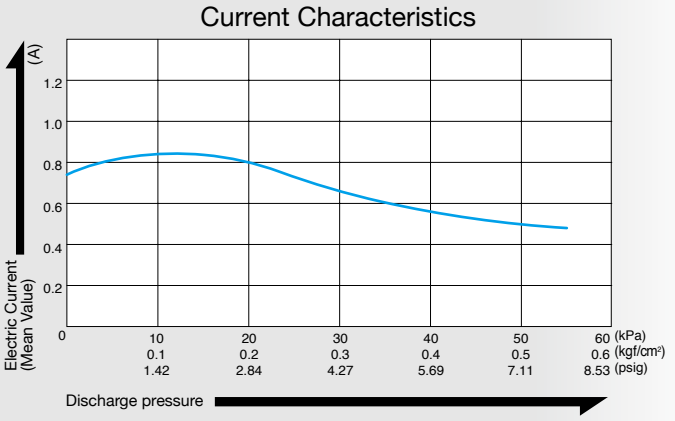

Specifications

Rated Pressure	20 kPa (0.2 kgf/cm²) 0.2 bar 2.84 psig
Rated Airflow	5 L/min *1 0.177 cfm
Maximum Pressure	50 kPa (0.5 kgf/cm²) 0.5 bar 7.11 psig
Rated Voltage	12 V DC
Current (Mean Value)	0.81 A
Rated Performance (MTTF)	10,000 hours
Outlet	6 mm O.D. hose barb
Duty Cycle	Continuous
Coil Insulation Class	Class A equivalent
Mounting Dimensions	76 (L) x 70 (W) mm 2 - 63/64" (L) x 2 - 3/4" (W)
Weight	0.91 kg 2.01 Lbs
Leadwire Length	300 mm 11 - 13/16"

*1: Airflow at rated pressure.

Optional Accessory (LB07793)

Heavy duty rubber feet available on request.

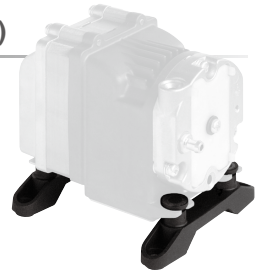

Application Examples

Medical equipment, analyzers, etc.

External Dimensions (Unit: mm)

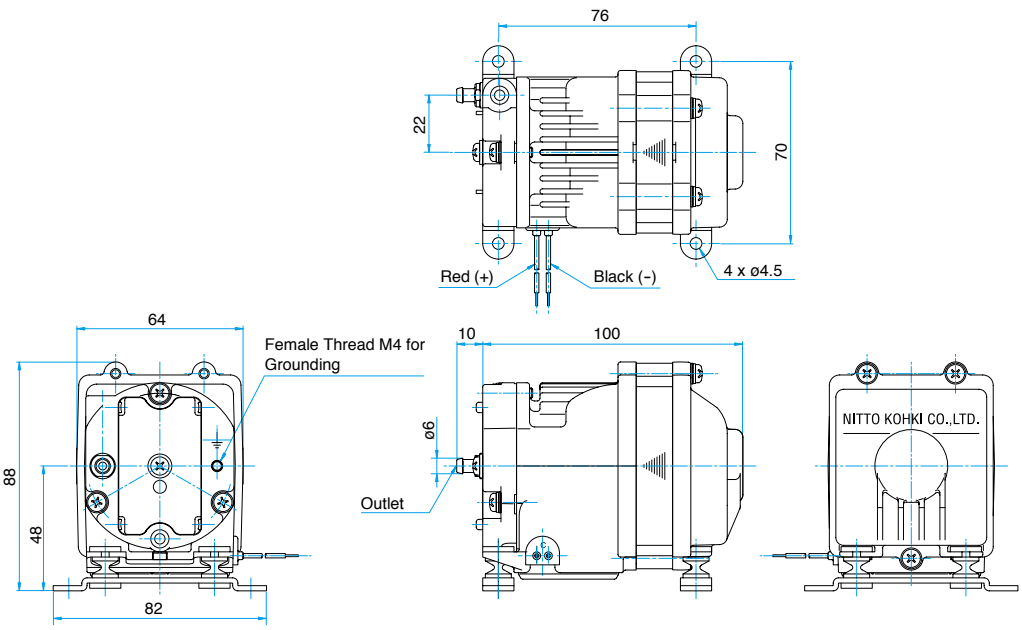

Compressor

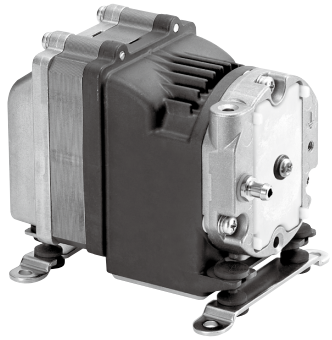

Model DAH102-Y1

24 V DC

CE 24 V | UK CA 24 V

Airflow & Electric Current

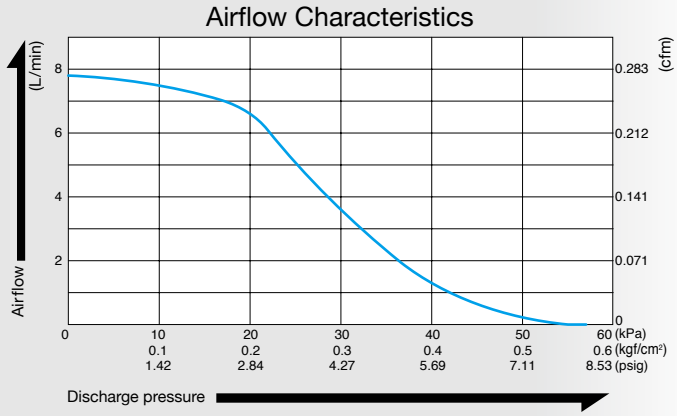

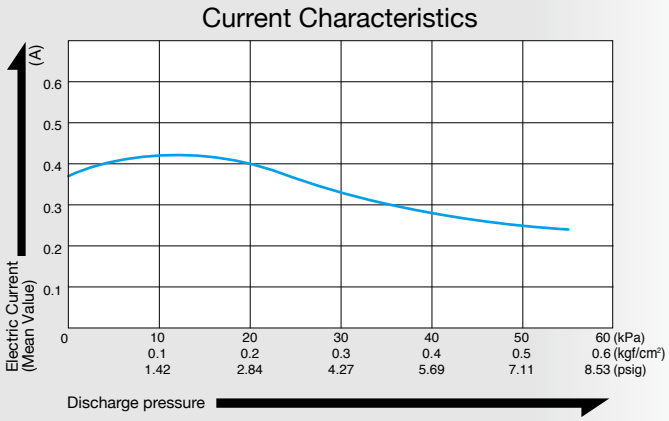

Specifications

Rated Pressure	20 kPa (0.2 kgf/cm²) 0.2 bar 2.84 psig
Rated Airflow	5 L/min *1 0.177 cfm
Maximum Pressure	50 kPa (0.5 kgf/cm²) 0.5 bar 7.11 psig
Rated Voltage	24 V DC
Current (Mean Value)	0.40 A
Rated Performance (MTTF)	10,000 hours
Outlet	6 mm O.D. hose barb
Duty Cycle	Continuous
Coil Insulation Class	Class A equivalent
Mounting Dimensions	76 (L) x 70 (W) mm 2 - 63/64" (L) x 2 - 3/4" (W)
Weight	0.91 kg 2.01 Lbs
Leadwire Length	300 mm 11 - 13/16"

*1: Airflow at rated pressure.

Optional Accessory (LB07793)

Heavy duty rubber feet available on request.

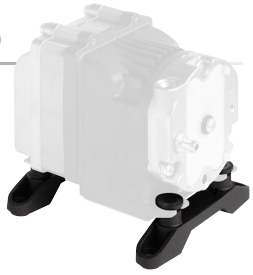

Application Examples

Medical equipment, analyzers, etc.

External Dimensions (Unit: mm)

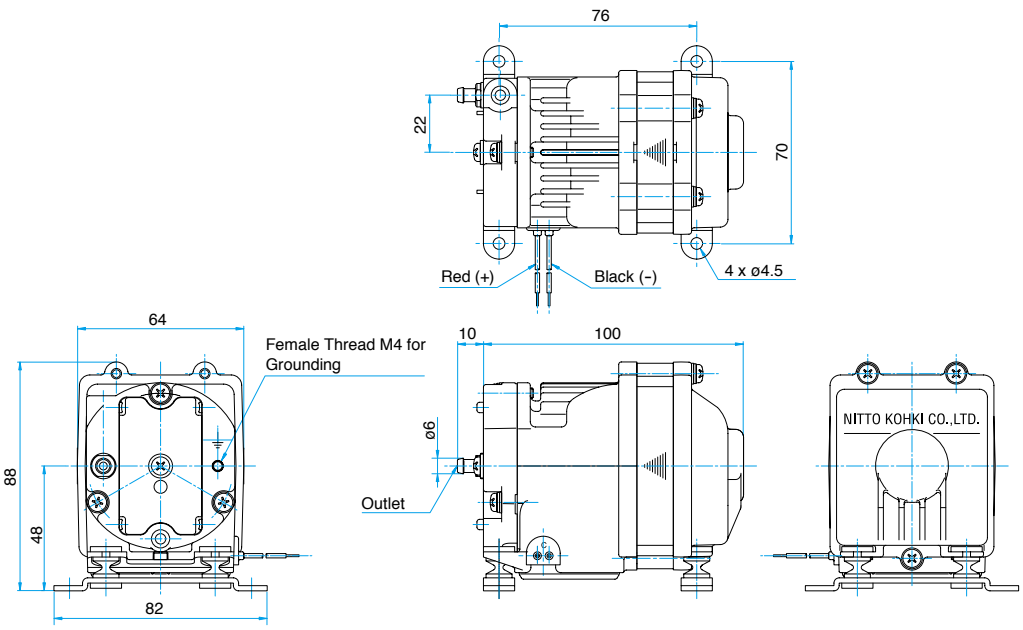

Compressor

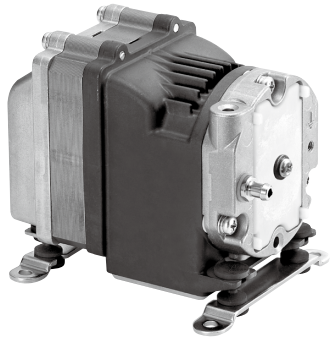

Model DAH105-X1

12 V DC

CE 12 V | UKCA 12 V

Airflow & Electric Current

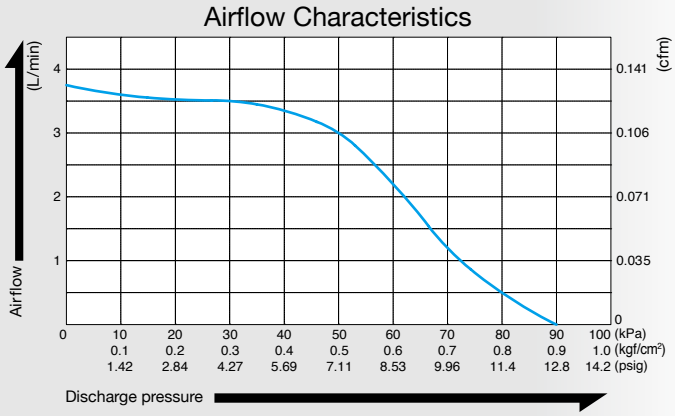

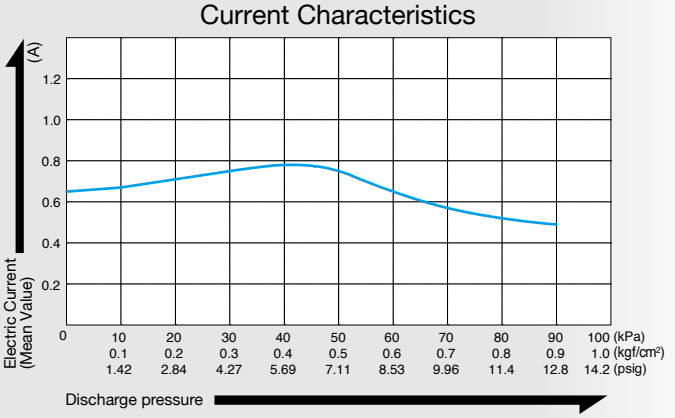

Specifications

Rated Pressure	50 kPa (0.5 kgf/cm²) 0.5 bar 7.11 psig
Rated Airflow	2.5 L/min *1 0.088 cfm
Maximum Pressure	80 kPa (0.8 kgf/cm²) 0.8 bar 11.4 psig
Rated Voltage	12 V DC
Current (Mean Value)	0.74 A
Rated Performance (MTTF)	10,000 hours
Outlet	6 mm O.D. hose barb
Duty Cycle	Continuous
Coil Insulation Class	Class A equivalent
Mounting Dimensions	76 (L) x 70 (W) mm 2 - 63/64" (L) x 2 - 3/4" (W)
Weight	0.91 kg 2.01 Lbs
Leadwire Length	300 mm 11 - 13/16"

*1: Airflow at rated pressure.

Optional Accessory (LB07793)

Heavy duty rubber feet available on request.

Application Examples

Medical equipment, analyzers, etc.

External Dimensions (Unit: mm)

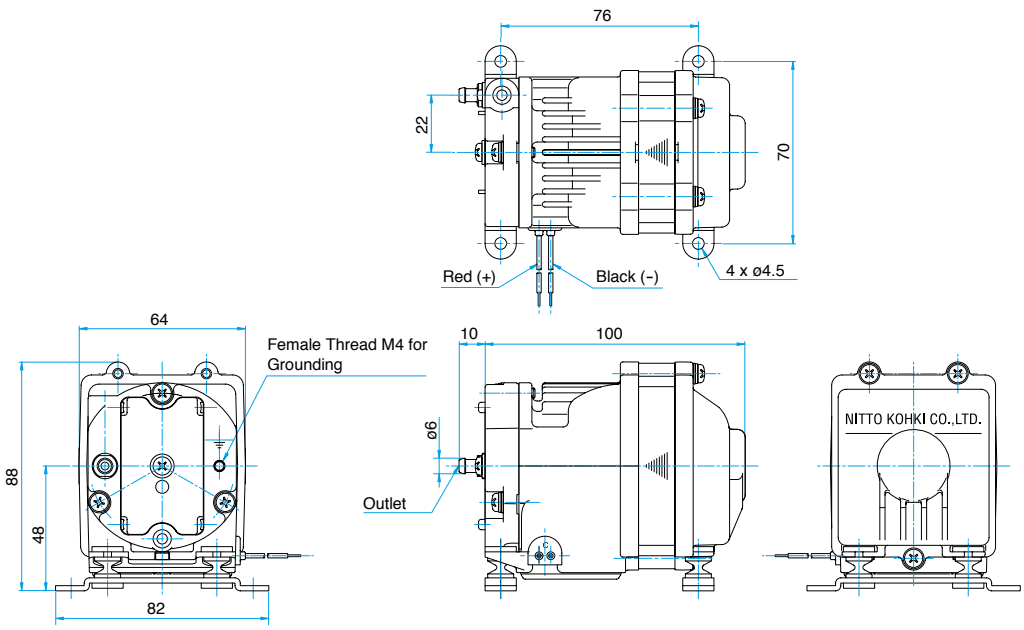

Compressor

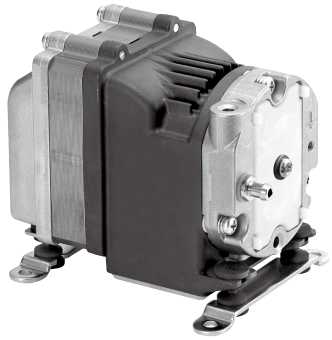

Model DAH105-Y1

24 V DC

CE 24 V | UKCA 24 V

Airflow & Electric Current

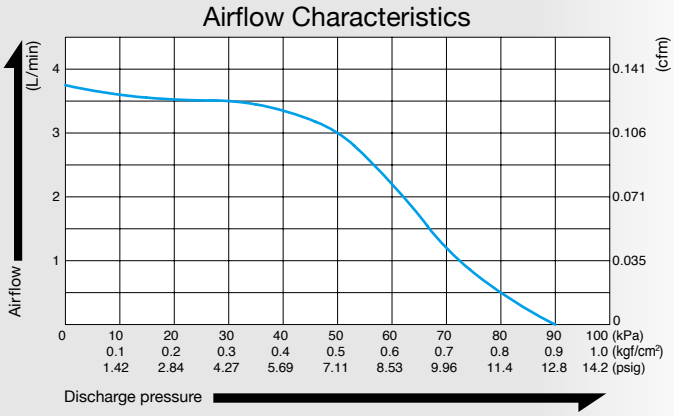

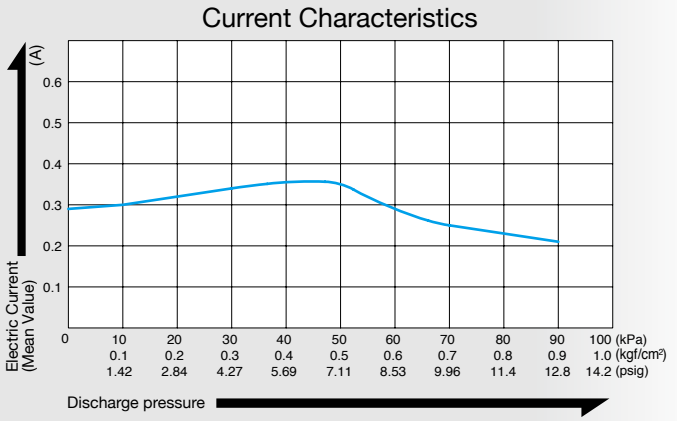

Specifications

Rated Pressure	50 kPa (0.5 kgf/cm²) 0.5 bar 7.11 psig
Rated Airflow	2.5 L/min *1 0.088 cfm
Maximum Pressure	80 kPa (0.8 kgf/cm²) 0.8 bar 11.4 psig
Rated Voltage	24 V DC
Current (Mean Value)	0.35 A
Rated Performance (MTTF)	10,000 hours
Outlet	6 mm O.D. hose barb
Duty Cycle	Continuous
Coil Insulation Class	Class A equivalent
Mounting Dimensions	76 (L) x 70 (W) mm 2 - 63/64" (L) x 2 - 3/4" (W)
Weight	0.91 kg 2.01 Lbs
Leadwire Length	300 mm 11 - 13/16"

*1: Airflow at rated pressure.

Optional Accessory (LB07793)

Heavy duty rubber feet available on request.

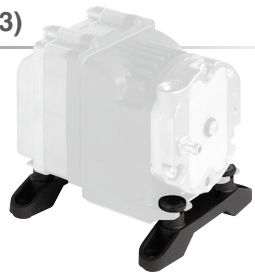

Application Examples

Medical equipment, analyzers, etc.

External Dimensions (Unit: mm)

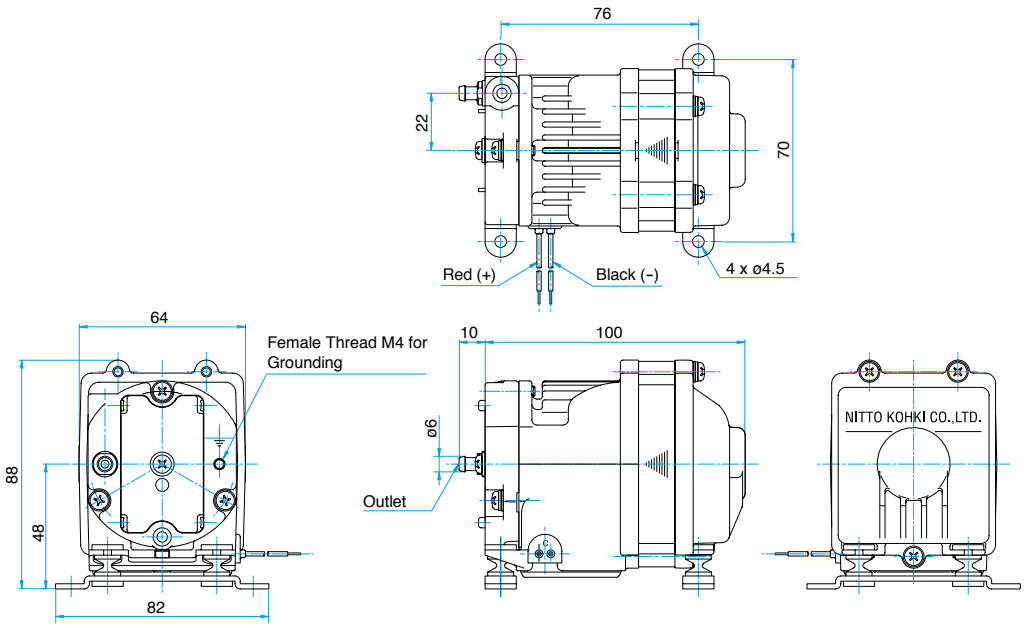

Compressor

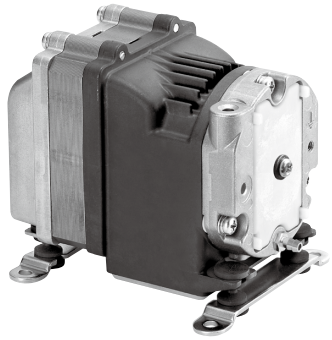

Model DAH110-X1

12 V DC

CE 12 V UKCA 12 V

Airflow & Electric Current

Airflow Characteristics

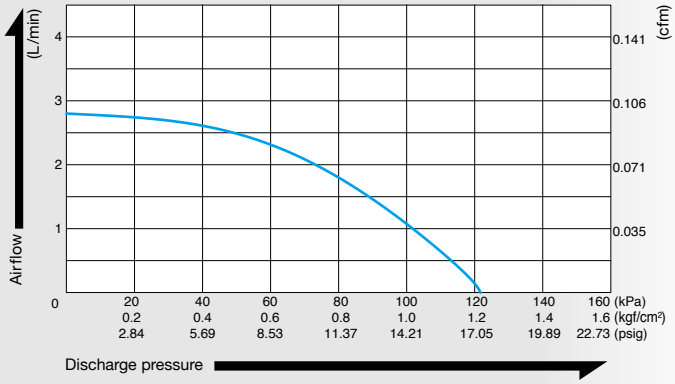

Current Characteristics

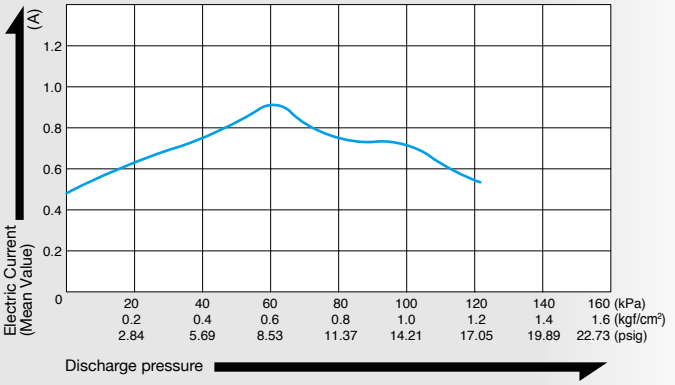

Specifications

Rated Pressure	100 kPa (1.0 kgf/cm²) 1.0 bar 14.2 psig
Rated Airflow	1.0 L/min *1 0.035 cfm
Maximum Pressure	120 kPa (1.2 kgf/cm²) 1.2 bar 17.1 psig
Rated Voltage	12 V DC
Current (Mean Value)	0.74 A
Rated Performance (MTTF)	5,000 hours
Outlet	4.7 mm O.D. hose barb
Duty Cycle	Continuous
Coil Insulation Class	Class A equivalent
Mounting Dimensions	76 (L) x 70 (W) mm 2 - 63/64" (L) x 2 - 3/4" (W)
Weight	0.91 kg 2.01 Lbs
Leadwire Length	300 mm 11 - 13/16"

*1: Airflow at rated pressure.

Optional Accessory (LB07793)

Heavy duty rubber feet available on request.

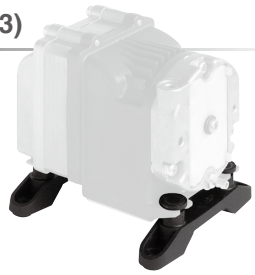

Application Examples

Medical equipment, analyzers, etc.

External Dimensions (Unit: mm)

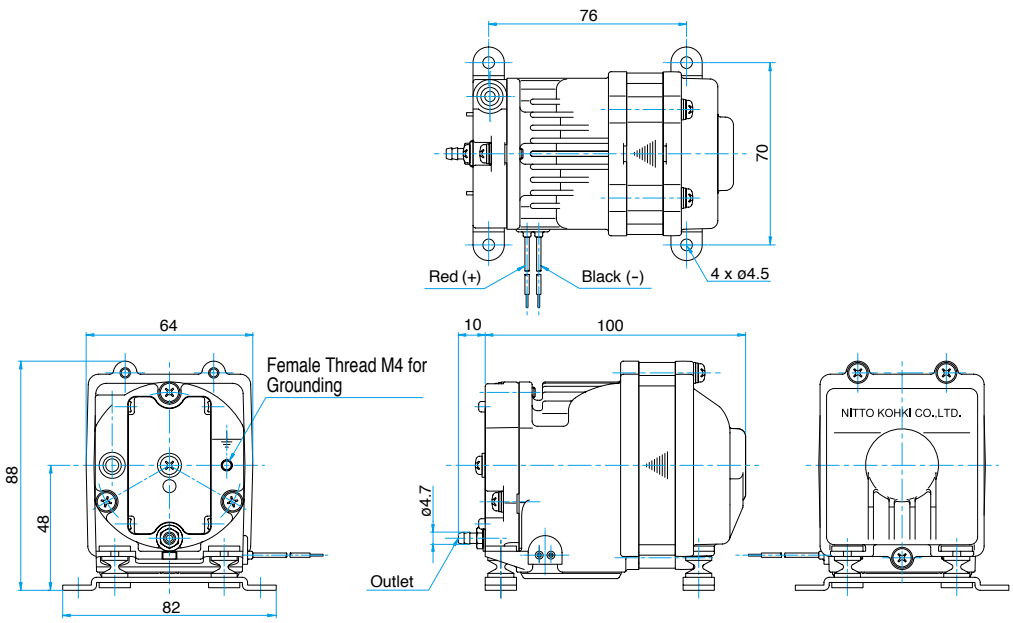

Compressor

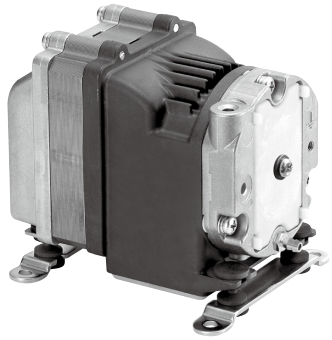

Model DAH110-Y1

24 V DC

CE 24 V | UKCA 24 V

Airflow & Electric Current

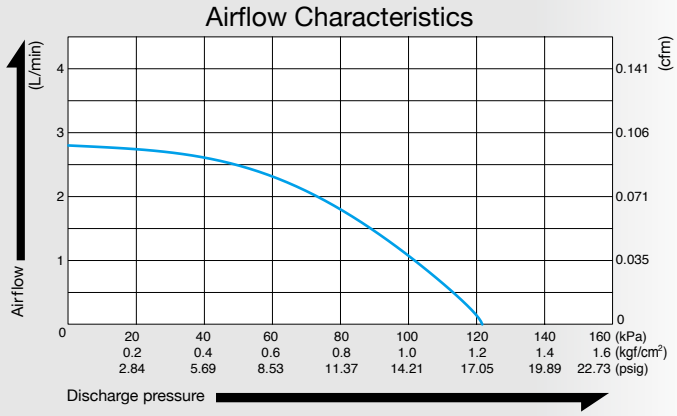

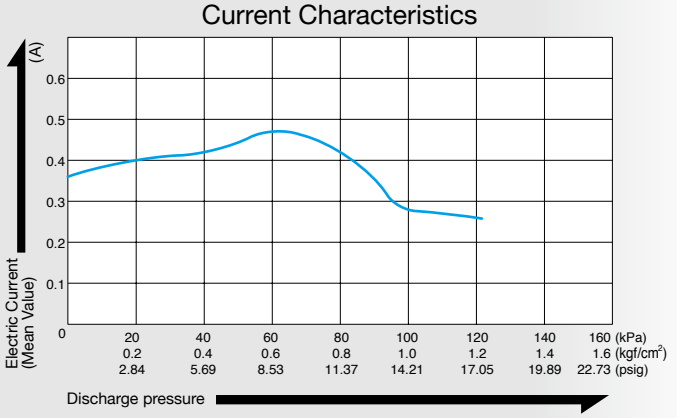

Specifications

Rated Pressure	100 kPa (1.0 kgf/cm²) 1.0 bar 14.2 psig
Rated Airflow	1.0 L/min *1 0.035 cfm
Maximum Pressure	120 kPa (1.2 kgf/cm²) 1.2 bar 17.1 psig
Rated Voltage	24 V DC
Current (Mean Value)	0.27 A
Rated Performance (MTTF)	5,000 hours
Outlet	4.7 mm O.D. hose barb
Duty Cycle	Continuous
Coil Insulation Class	Class A equivalent
Mounting Dimensions	76 (L) x 70 (W) mm 2 - 63/64" (L) x 2 - 3/4" (W)
Weight	0.91 kg 2.01 Lbs
Leadwire Length	300 mm 11 - 13/16"

*1: Airflow at rated pressure.

Optional Accessory (LB07793)

Heavy duty rubber feet available on request.

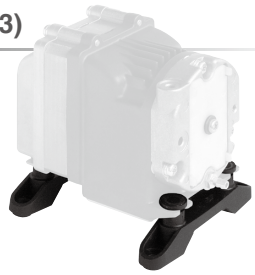

Application Examples

Medical equipment, analyzers, etc.

External Dimensions (Unit: mm)

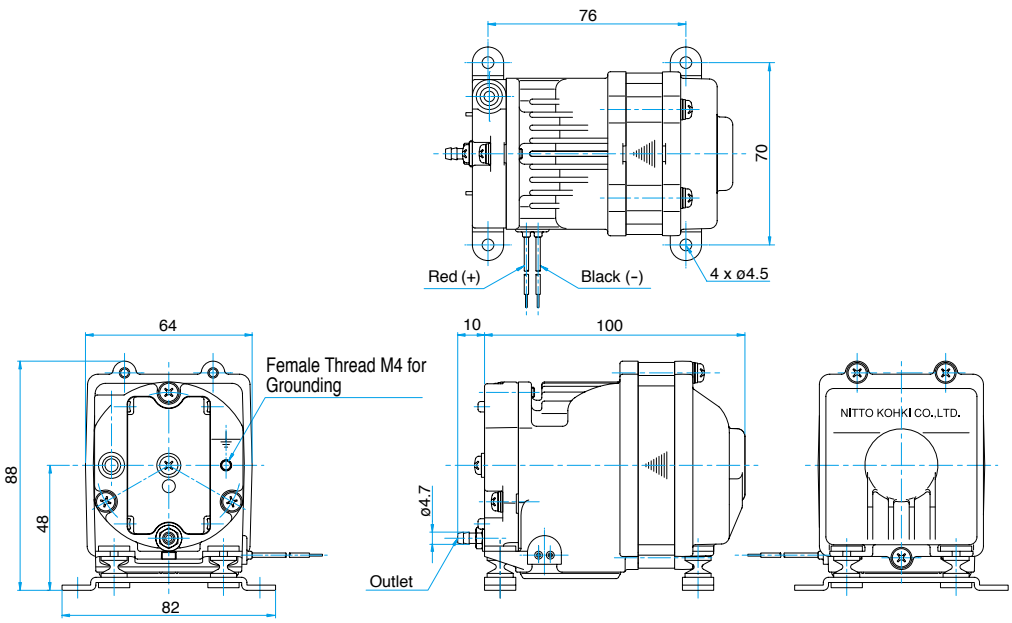

DC LINEAR
Free Piston Vacuum Pump

VACUUM PUMP

Page

DVH130-X1 — 47
DVH130-Y1 — 48
DVH145-X1 — 49
DVH145-Y1 — 50

DVH series

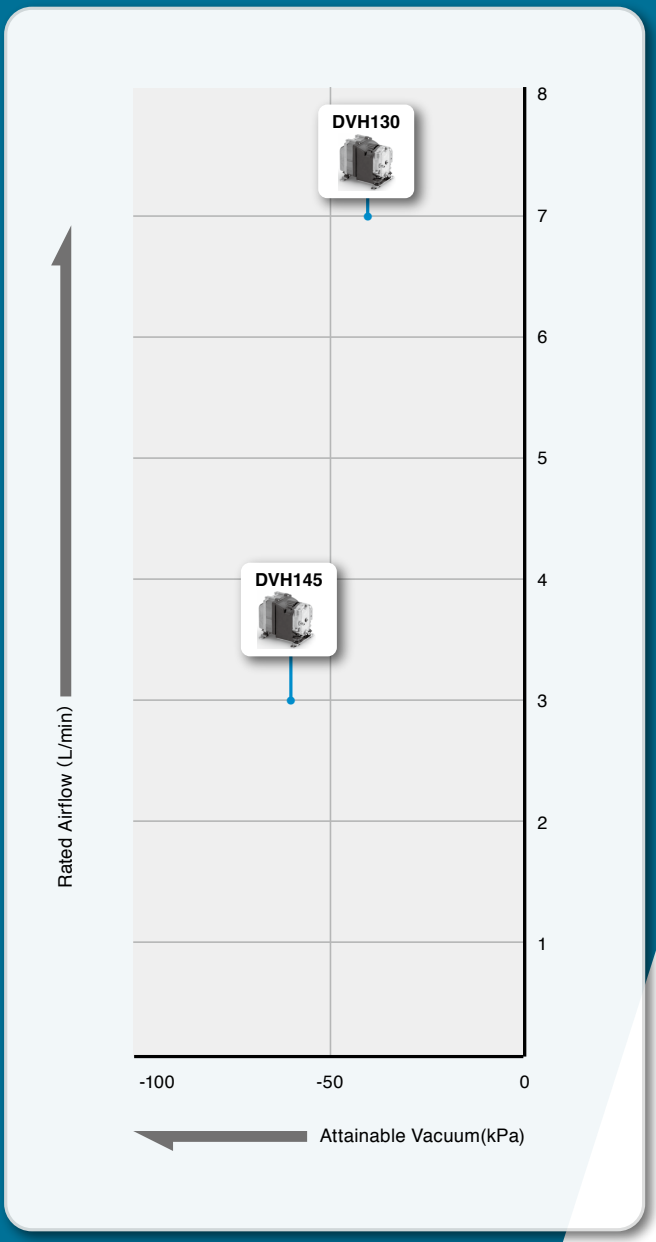

Vacuum Pump

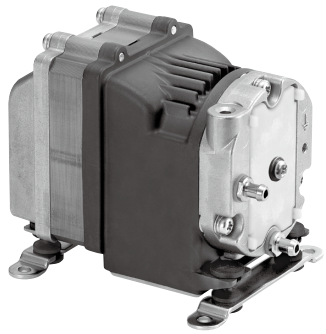

Model DVH130-X1

12 V DC

CE 12 V | UKCA 12 V

Airflow & Electric Current

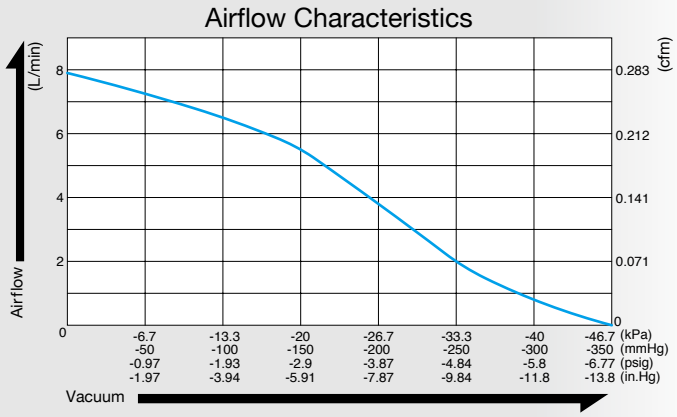

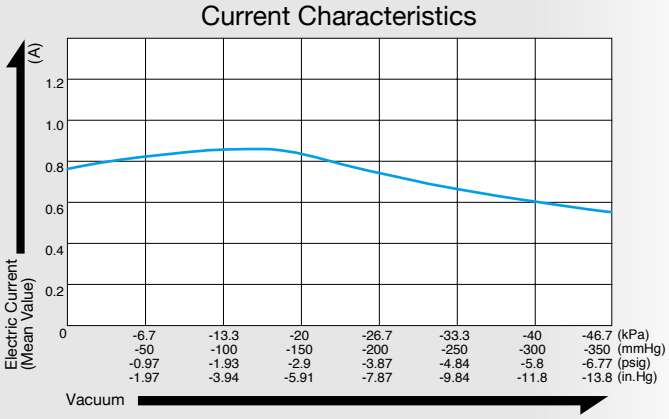

Specifications

Attainable Vacuum	-40 kPa (-300 mmHg) -400 mbar -11.8 in. Hg
Free Air Displacement	7 L/min *1 0.247 cfm
Rated Voltage	12 V DC
Current (Mean Value)	0.86 A
Rated Performance (MTTF)	10,000 hours
Inlet	6 mm O.D. hose barb
Outlet	6 mm O.D. hose barb
Duty Cycle	Continuous
Coil Insulation Class	Class A equivalent
Mounting Dimensions	76 (L) x 70 (W) mm 2 - 63/64" (L) x 2 - 3/4" (W)
Weight	0.91 kg 2.01 Lbs
Leadwire Length	300 mm 11 - 13/16"

*1: Free air displacement at no-load operation.

Optional Accessory (LB07793)

Heavy duty rubber feet available on request.

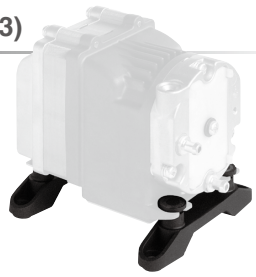

Application Examples

Medical equipment, analyzers, etc.

External Dimensions (Unit: mm)

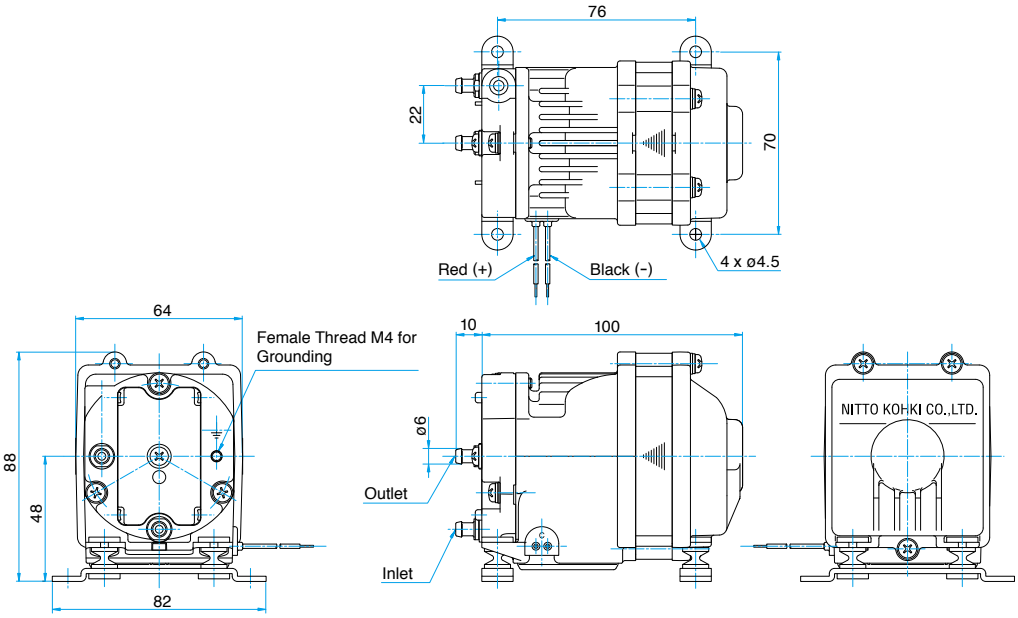

Vacuum Pump

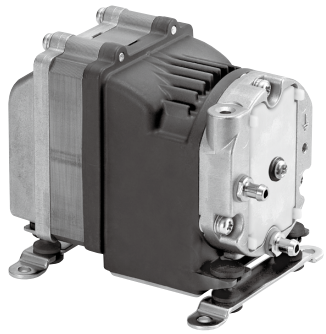

Model DVH130-Y1

24 V DC

CE 24 V | UK CA 24 V

Airflow & Electric Current

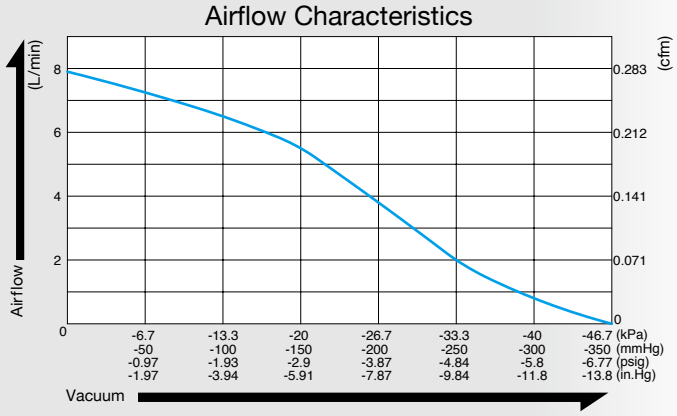

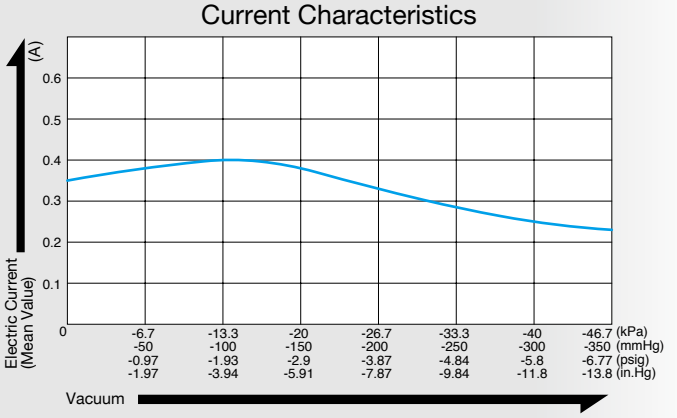

Specifications

Attainable Vacuum	-40 kPa (-300 mmHg) -400 mbar -11.8 in. Hg
Free Air Displacement	7 L/min *1 0.247 cfm
Rated Voltage	24 V DC
Current (Mean Value)	0.41 A
Rated Performance (MTTF)	10,000 hours
Inlet	6 mm O.D. hose barb
Outlet	6 mm O.D. hose barb
Duty Cycle	Continuous
Coil Insulation Class	Class A equivalent
Mounting Dimensions	76 (L) x 70 (W) mm 2 - 63/64" (L) x 2 - 3/4" (W)
Weight	0.91 kg 2.01 Lbs
Leadwire Length	300 mm 11 - 13/16"

*1: Free air displacement at no-load operation.

Optional Accessory (LB07793)

Heavy duty rubber feet available on request.

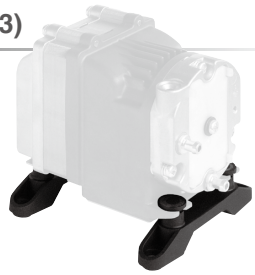

Application Examples

Medical equipment, analyzers, etc.

External Dimensions (Unit: mm)

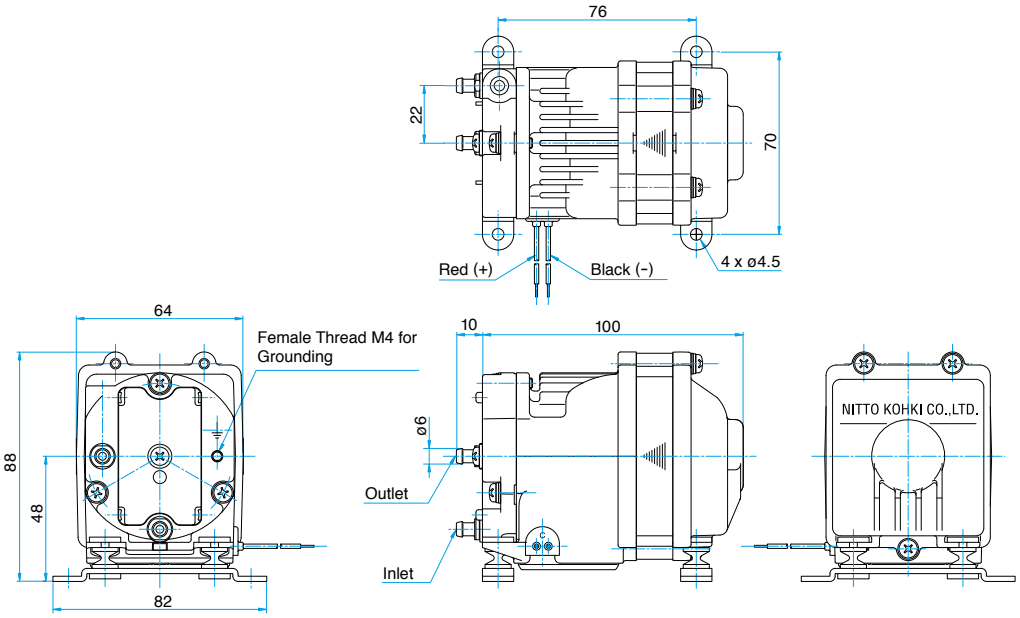

Vacuum Pump

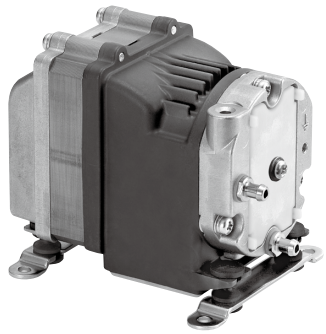

Model DVH145-X1

12 V DC

CE 12 V | UKCA 12 V

Airflow & Electric Current

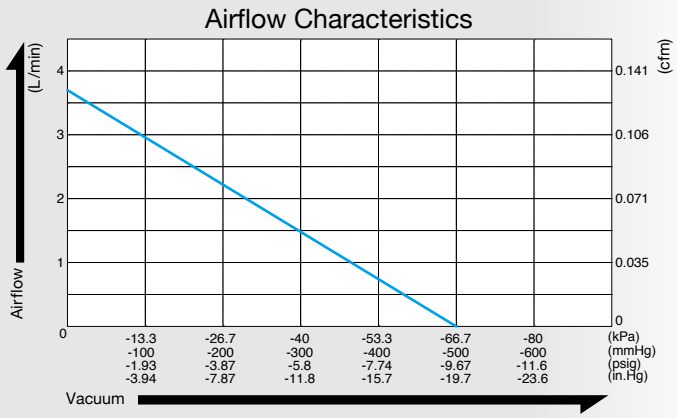

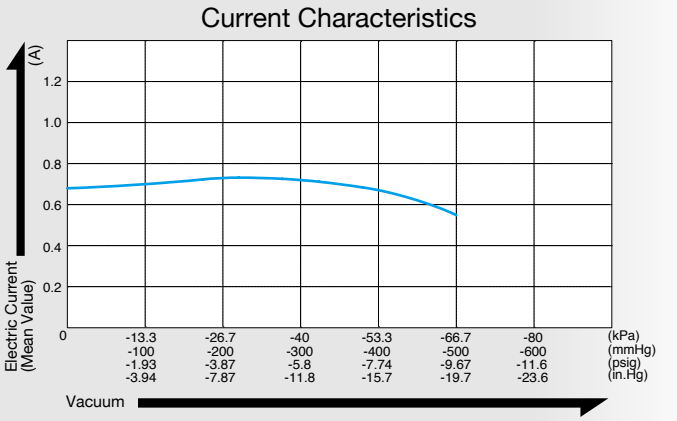

Specifications

Attainable Vacuum	-60 kPa (-450 mmHg) -600 mbar -17.7 in. Hg
Free Air Displacement	3 L/min *1 0.106 cfm
Rated Voltage	12 V DC
Current (Mean Value)	0.73 A
Rated Performance (MTTF)	10,000 hours
Inlet	6 mm O.D. hose barb
Outlet	6 mm O.D. hose barb
Duty Cycle	Continuous
Coil Insulation Class	Class A equivalent
Mounting Dimensions	76 (L) x 70 (W) mm 2 - 63/64" (L) x 2 - 3/4" (W)
Weight	0.91 kg 2.01 Lbs
Leadwire Length	300 mm 11 - 13/16"

*1: Free air displacement at no-load operation.

Optional Accessory (LB07793)

Heavy duty rubber feet available on request.

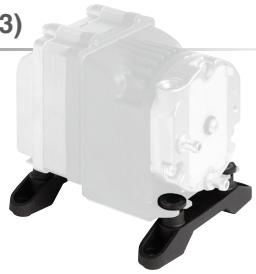

Application Examples

Medical equipment, analyzers, etc.

External Dimensions (Unit: mm)

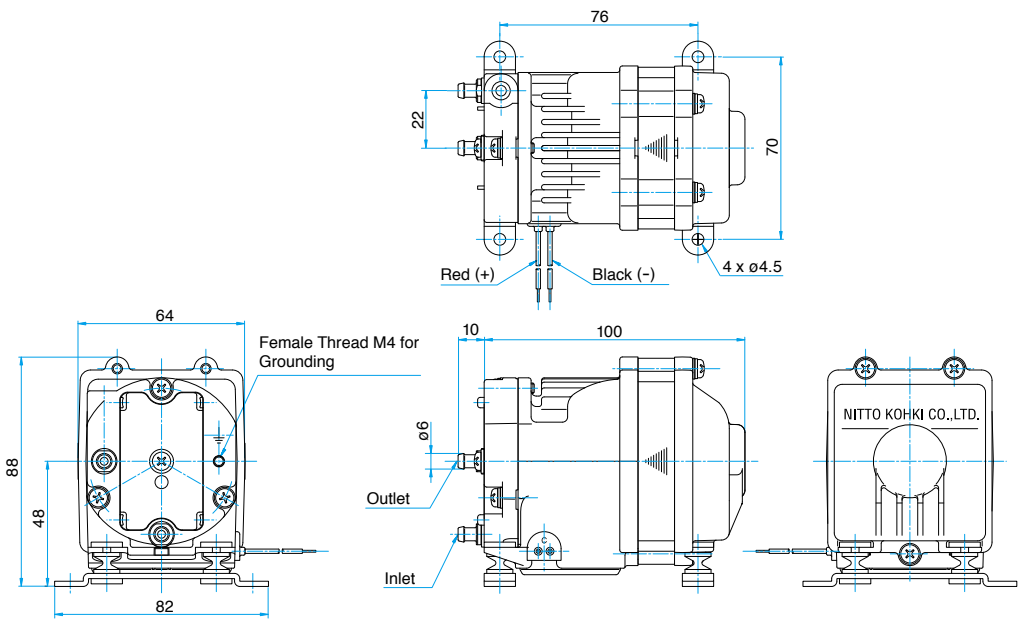

Vacuum Pump

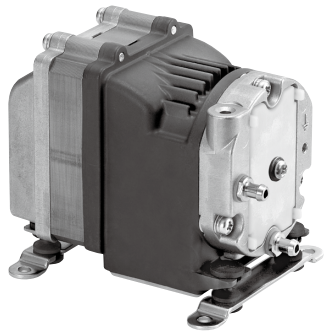

Model DVH145-Y1

24 V DC

CE 24 V | UK CA 24 V

Airflow & Electric Current

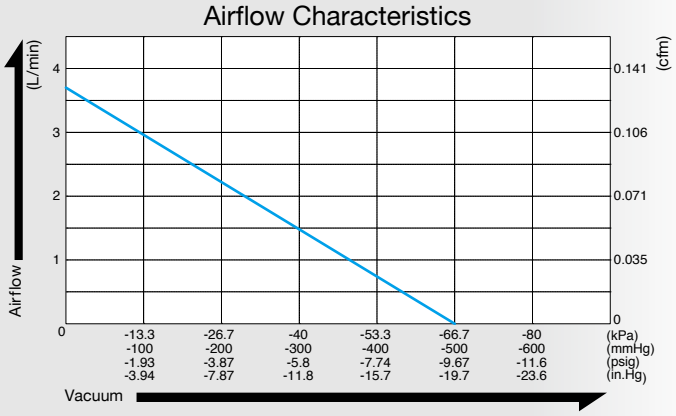

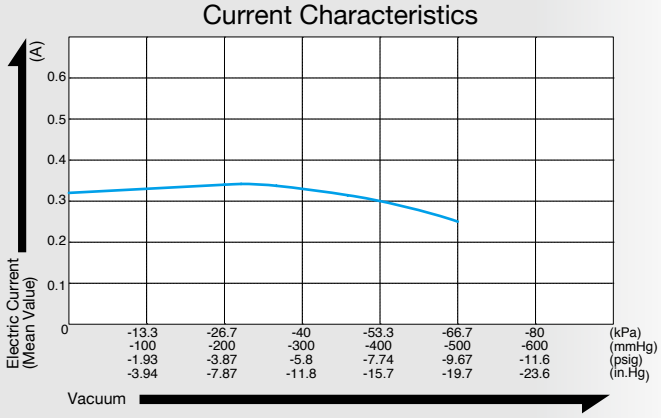

Specifications

Attainable Vacuum	-60 kPa (-450 mmHg) -600 mbar -17.7 in. Hg
Free Air Displacement	3 L/min *1 0.106 cfm
Rated Voltage	24 V DC
Current (Mean Value)	0.34 A
Rated Performance (MTTF)	10,000 hours
Inlet	6 mm O.D. hose barb
Outlet	6 mm O.D. hose barb
Duty Cycle	Continuous
Coil Insulation Class	Class A equivalent
Mounting Dimensions	76 (L) x 70 (W) mm 2 - 63/64" (L) x 2 - 3/4" (W)
Weight	0.91 kg 2.01 Lbs
Leadwire Length	300 mm 11 - 13/16"

*1: Free air displacement at no-load operation.

Optional Accessory (LB07793)

Heavy duty rubber feet available on request.

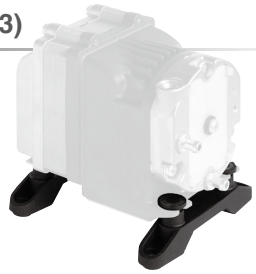

Application Examples

Medical equipment, analyzers, etc.

External Dimensions (Unit: mm)

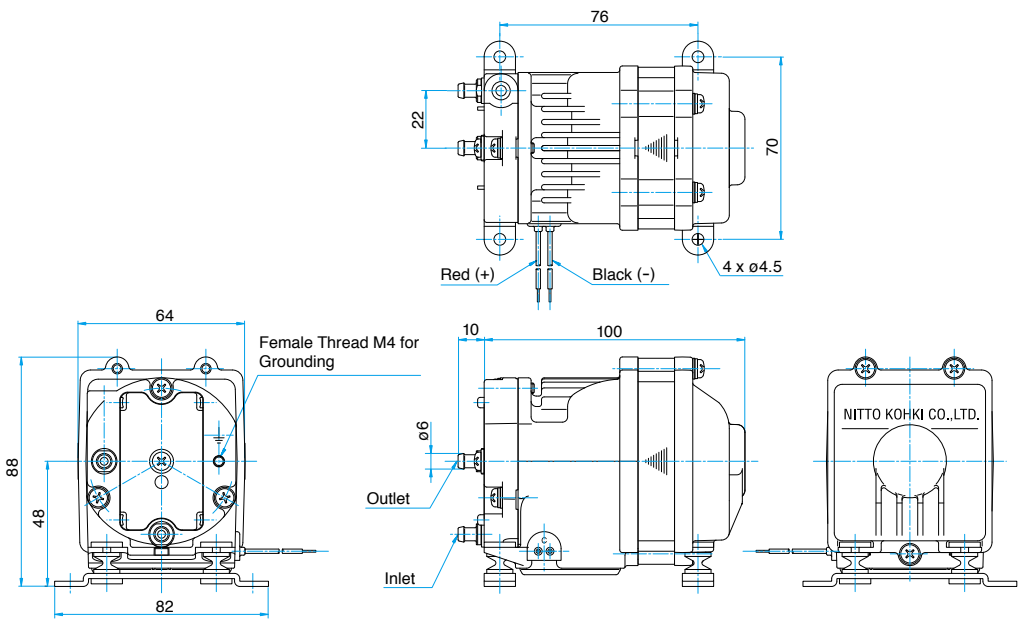

AC LINEAR
Diaphragm Pump

DIAPHRAGM PUMP

VC series

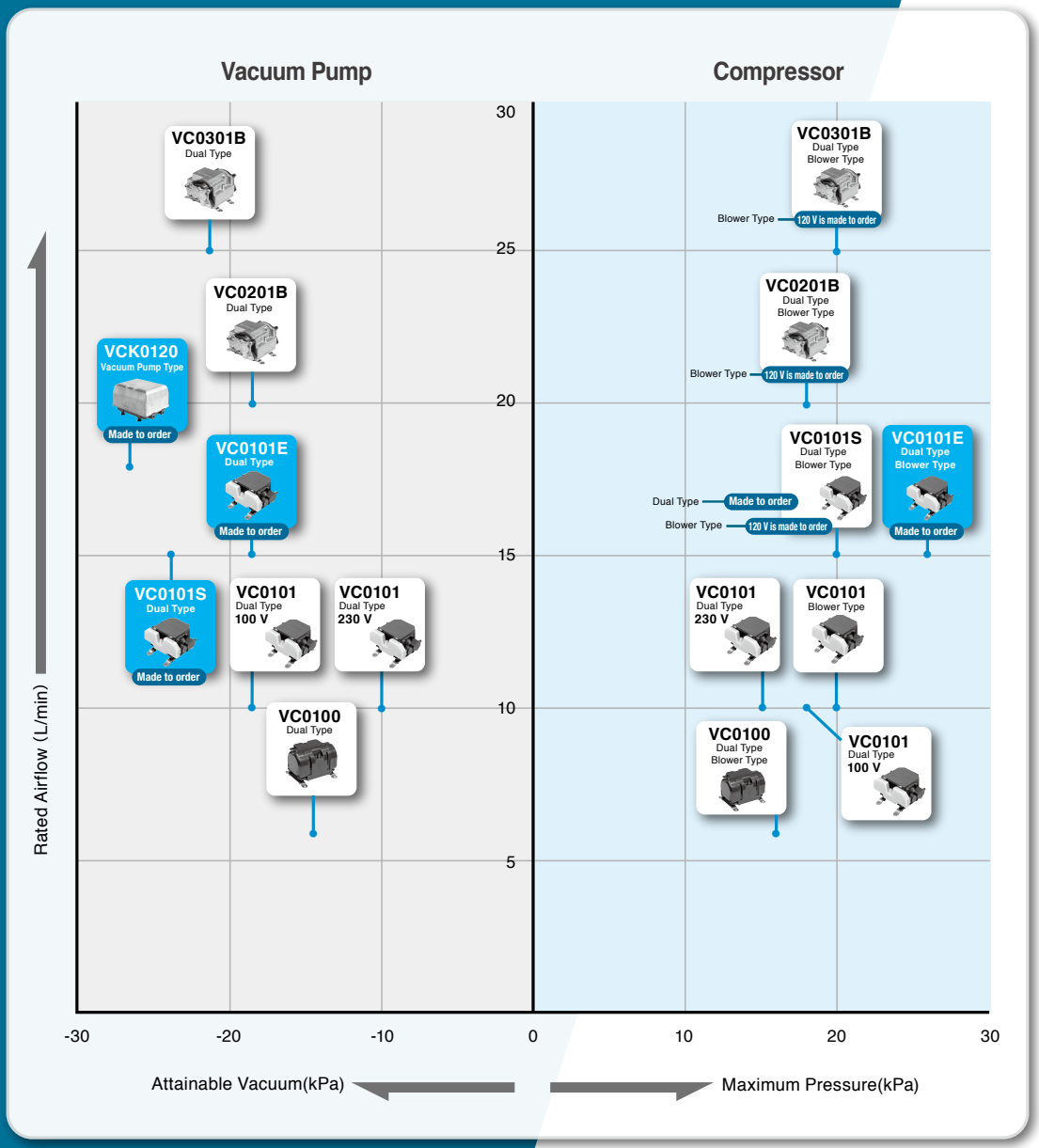

Page

VC0100 Dual Type — 53
VC0100 Blower Type — 54
VC0101 Dual Type — 55
VC0101 Blower Type — 56
VC0101S Blower Type — 57
VC0201B Dual Type — 58
VC0201B Blower Type — 59
VC0301B Dual Type — 60
VC0301B Blower Type — 61

Made to Order

VCK0120 Vacuum Pump Type — 105
VC0101E Dual Type — 106
VC0101E Blower Type — 107
VC0101S Dual Type — 118

Compressor and Vacuum Pump

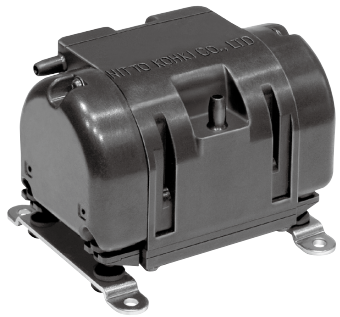

Model VC0100

Dual Type

120 V | 230 V | 230 V

Airflow & Power Consumption

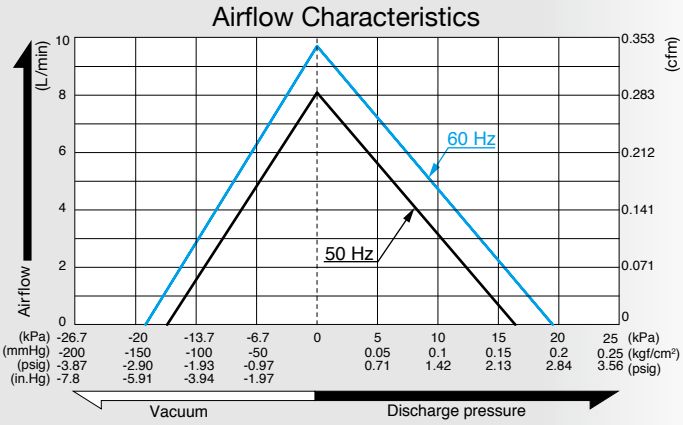

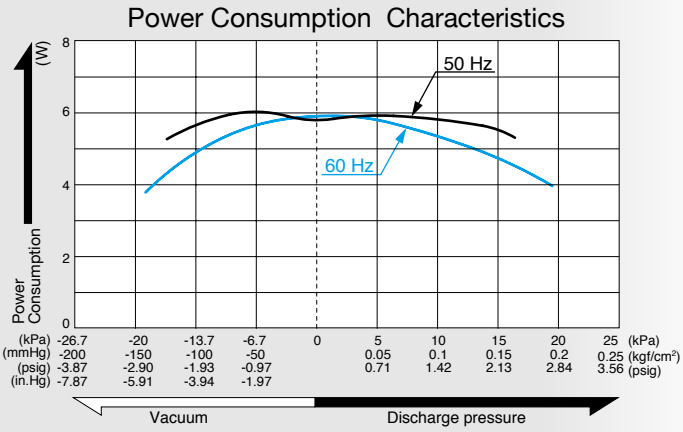

Specifications

Rated Pressure	4 kPa (0.04 kgf/cm²) 0.04 bar 0.57 psig	
Rated Airflow	6 L/min 0.212 cfm	
Maximum Pressure	16 kPa (0.16 kgf/cm²) 0.16 bar 2.28 psig	
Attainable Vacuum	-14.7 kPa (-110 mmHg) -147 mbar -4.33 in.Hg	
Rated Voltage	120 V AC	230 V AC
Power Consumption	6 W	
Rated Frequency	60 Hz	50 Hz
Rated Performance	5,000 hours	
Working Pressure Range	-14.7 kPa to 16 kPa (-110 mmHg to 0.16 kgf/cm²) -147 mbar to 0.16 bar -4.33 in.Hg to 2.28 psig	
Inlet	6 mm O.D. hose barb	
Outlet	6 mm O.D. hose barb	
Duty Cycle	Continuous	
Coil Insulation Class	Class A equivalent	Class E equivalent
Mounting Dimensions	70 (L) x 72 (W) mm 2 - 3/4" (L) x 2 - 53/64" (W)	
Weight	0.45 kg 0.99 Lbs	
Leadwire Length	300 mm 11 - 13/16"	

Application Examples

Massage Devices

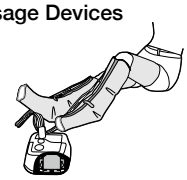

Bedsore Prevention Mattress

External Dimensions (Unit: mm)

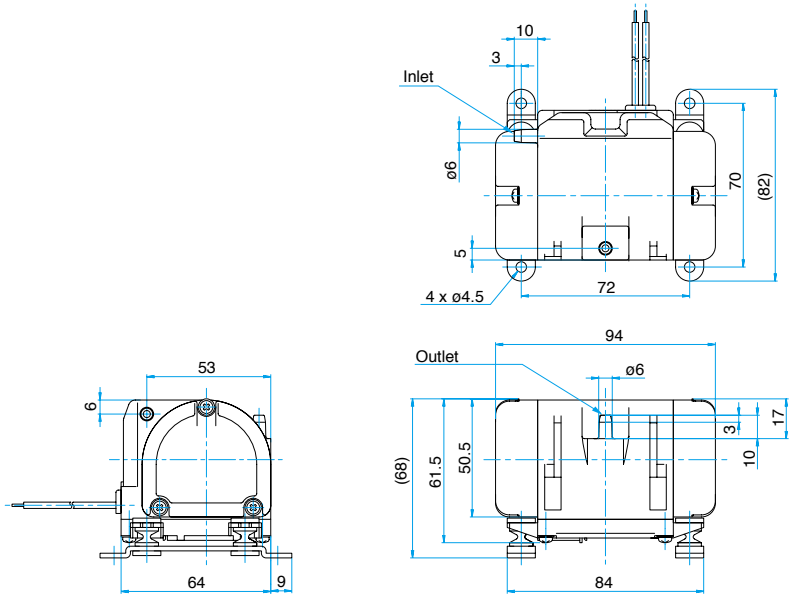

Compressor

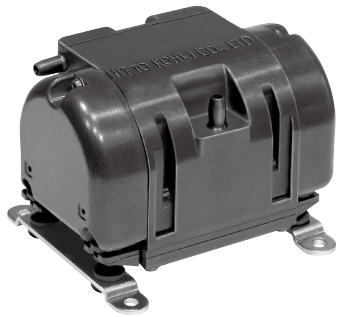

Model VC0100

Blower Type

120 V | 230 V | 230 V

Airflow & Power Consumption

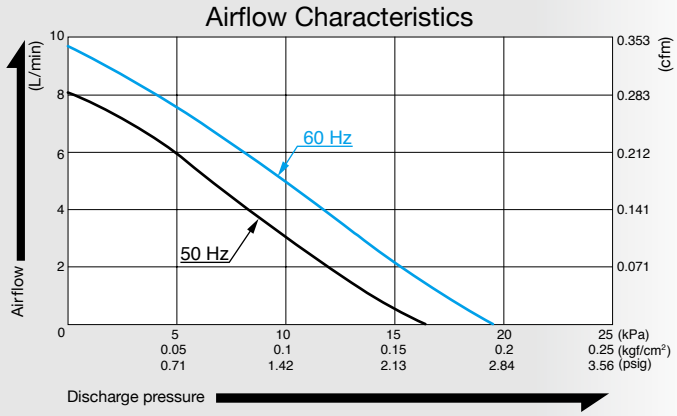

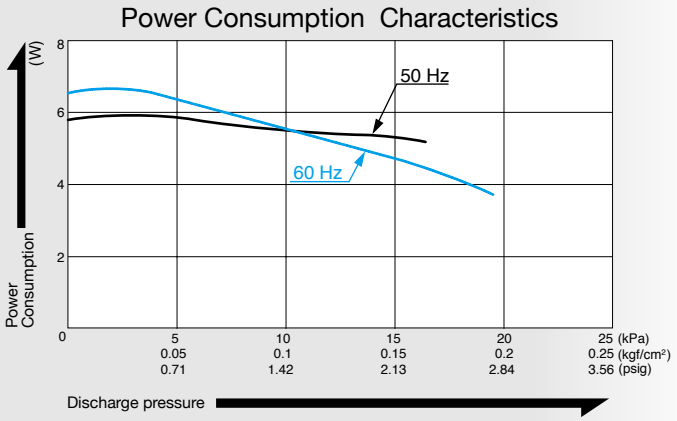

Specifications

Rated Pressure	4 kPa (0.04 kgf/cm²) 0.04 bar 0.57 psig	
Rated Airflow	6 L/min 0.212 cfm	
Maximum Pressure	16 kPa (0.16 kgf/cm²) 0.16 bar 2.28 psig	
Rated Voltage	120 V AC	230 V AC
Power Consumption	6 W	
Rated Frequency	60 Hz	50 Hz
Rated Performance	10,000 hours	
Working Pressure Range	0 to 16 kPa (0 to 0.16 kgf/cm²) 0 to 0.16 bar 0 to 2.28 psig	
Outlet	6 mm O.D. hose barb	
Duty Cycle	Continuous	
Coil Insulation Class	Class A equivalent	Class E equivalent
Mounting Dimensions	70 (L) x 72 (W) mm 2 - 3/4" (L) x 2 - 53/64" (W)	
Weight	0.45 kg 0.99 Lbs	
Leadwire Length	300 mm 11 - 13/16"	320 mm 12 - 19/32"

Application Examples

Massage Devices

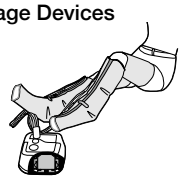

Bedsore Prevention Mattress

External Dimensions (Unit: mm)

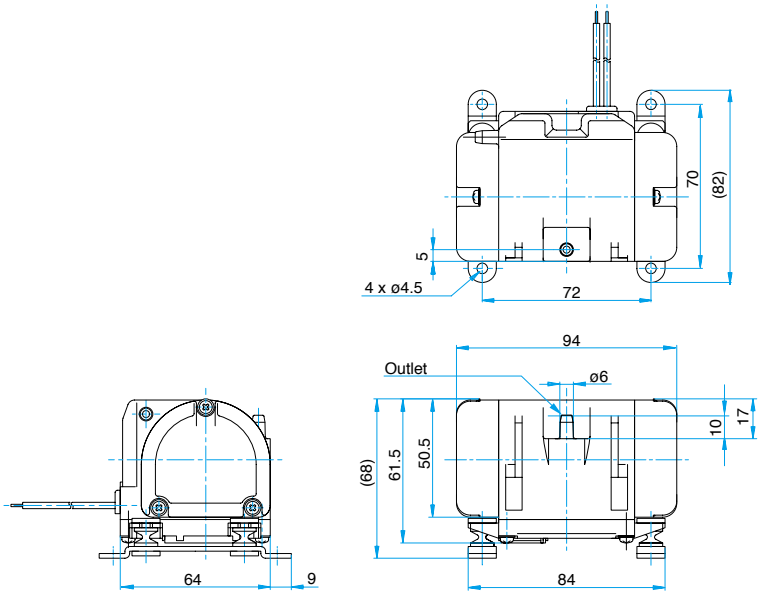

Compressor and Vacuum Pump

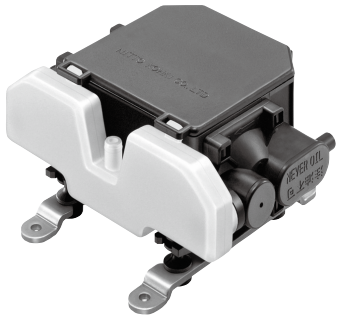

Model VC0101

Dual Type

120 V | 230 V | 230 V

Airflow & Power Consumption

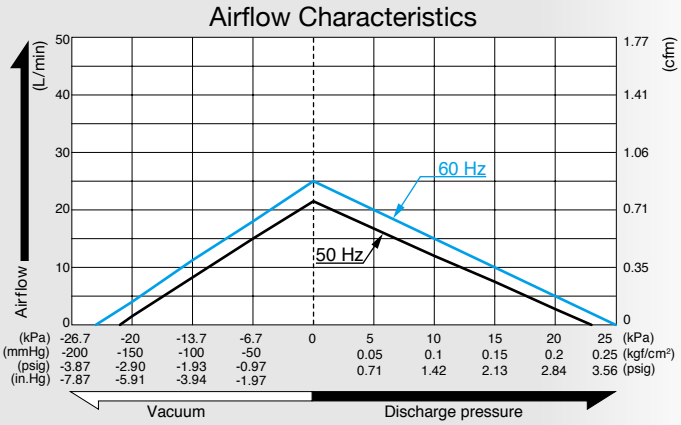

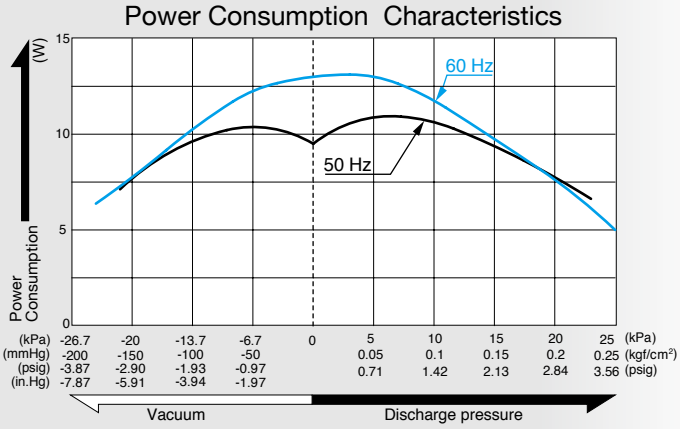

Specifications

Rated Pressure	10 kPa (0.1 kgf/cm²) 0.1 bar 1.42 psig	
Rated Airflow	10 L/min 0.35 cfm	
Rated Voltage	120 V AC	230 V AC
Maximum Pressure	18 kPa (0.18 kgf/cm²) 0.18 bar 2.56 psig	15 kPa (0.15 kgf/cm²) 0.15 bar 2.13 psig
Attainable Vacuum	-18.7 kPa (-140 mmHg) -187 mbar -5.51 in.Hg	-10 kPa (-76 mmHg) -100 mbar -2.95 in.Hg
Working Pressure Range	-18.7 kPa to 18 kPa (-140 mmHg to 0.18 kgf/cm²) -187 mbar to 0.18 bar -5.51 in.Hg to 2.56 psig	-10 kPa to 15 kPa (-76 mmHg to 0.15 kgf/cm²) -100 mbar to 0.15 bar -2.95 in.Hg to 2.13 psig
Power Consumption	11 W	
Rated Frequency	60 Hz	50 Hz
Rated Performance	5,000 hours	
Inlet	7.5 mm O.D. hose barb	
Outlet	7.5 mm O.D. hose barb	
Duty Cycle	Continuous	
Coil Insulation Class	Class B for UL	Class B equivalent
Mounting Dimensions	66 (L) x 100 (W) mm 2 - 19/32" (L) x 3 - 15/16" (W)	
Weight	0.82 kg 1.81 Lbs	0.84 kg 1.85 Lbs
Leadwire Length	300 mm 11 - 13/16"	200 mm 7 - 7/8"

Application Examples

Massage Devices

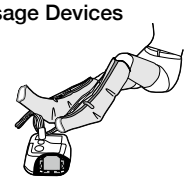

Bedsore Prevention Mattress

External Dimensions (Unit: mm)

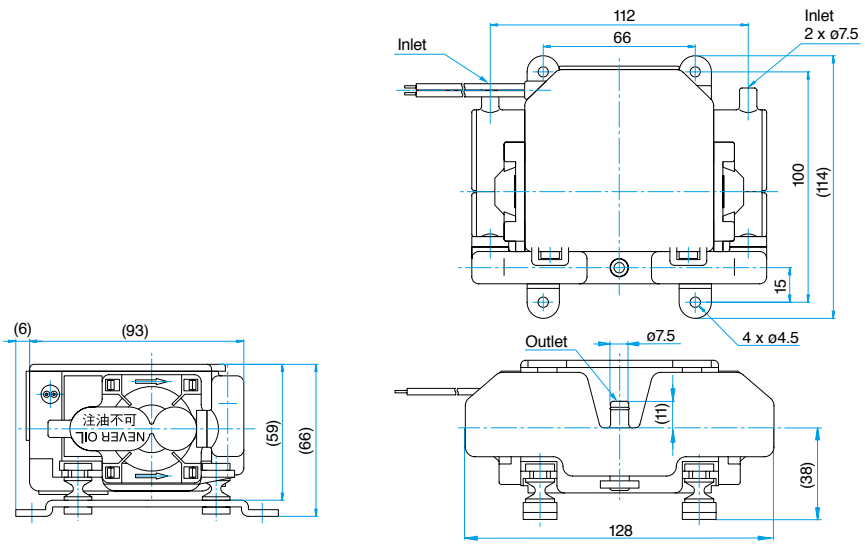

Compressor

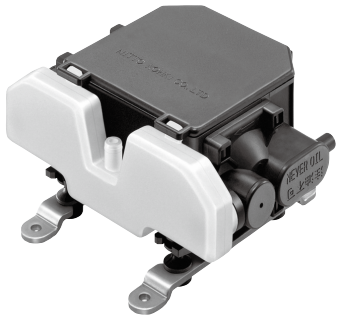

Model VC0101

Blower Type

120 V | 230 V | 230 V

Airflow & Power Consumption

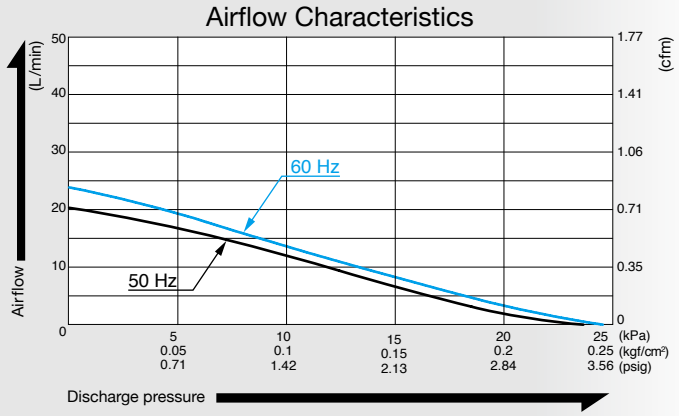

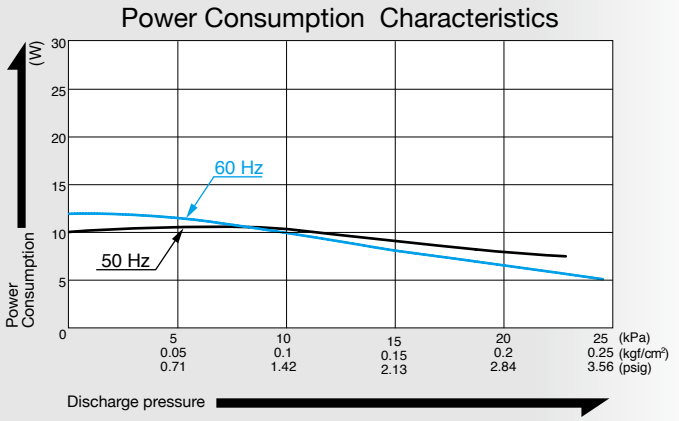

Specifications

Rated Pressure	10 kPa (0.1 kgf/cm²) 0.1 bar 1.42 psig	
Rated Airflow	10 L/min 0.35 cfm	
Maximum Pressure	20 kPa (0.2 kgf/cm²) 0.2 bar 2.84 psig	
Rated Voltage	120 V AC	230 V AC
Power Consumption	11 W	
Rated Frequency	60 Hz	50 Hz
Rated Performance	10,000 hours	
Working Pressure Range	0 to 20 kPa (0 to 0.2 kgf/cm²) 0 to 0.2 bar 0 to 2.84 psig	
Outlet	7.5 mm O.D. hose barb	
Duty Cycle	Continuous	
Coil Insulation Class	Class A	Class B equivalent
Mounting Dimensions	66 (L) x 100 (W) mm 2 - 19/32" (L) x 3 - 15/16" (W)	
Weight	0.82 kg 1.81 Lbs	0.84 kg 1.85 Lbs
Leadwire Length	300 mm 11 - 13/16"	

Application Examples

Massage Devices

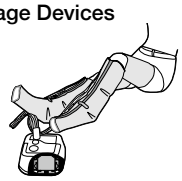

Bedsore Prevention Mattress

External Dimensions (Unit: mm)

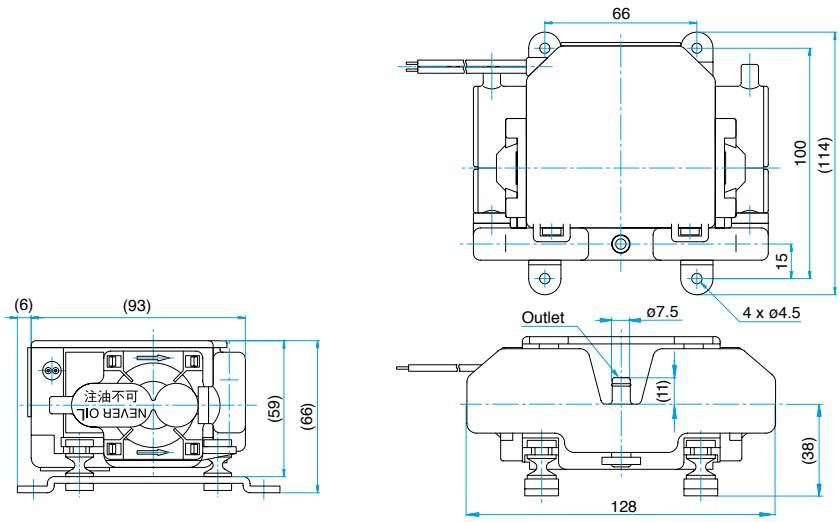

Compressor

Model VC0101S

Blower Type

120 V is made to order

CE 230 V | UKCA 230 V

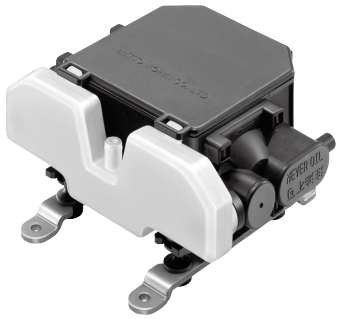

Airflow & Power Consumption

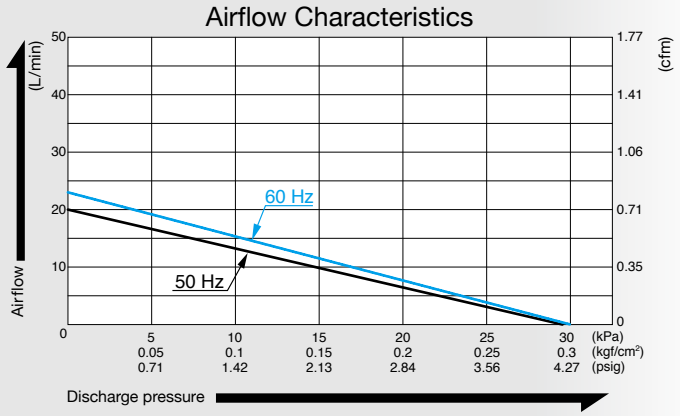

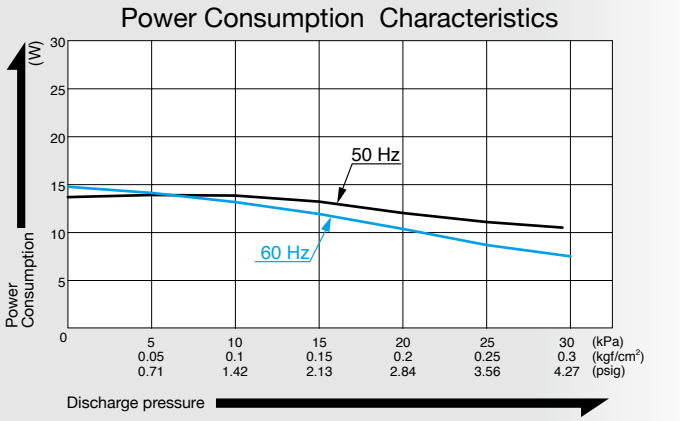

Specifications

Rated Pressure	5 kPa (0.05 kgf/cm²) 0.05 bar 0.71 psig	
Rated Airflow	15 L/min 0.53 cfm	
Maximum Pressure	26 kPa (0.26 kgf/cm²) 0.26 bar 3.70 psig	
Rated Voltage	120 V AC *1	230 V AC
Power Consumption	14 W	
Rated Frequency	60 Hz	50 Hz
Rated Performance	5,000 hours	
Working Pressure Range	0 to 26 kPa (0 to 0.26 kgf/cm²) 0 to 0.26 bar 0 to 3.70 psig	
Outlet	7.5 mm O.D. hose barb	
Duty Cycle	60 minutes	
Coil Insulation Class	Class B equivalent	
Mounting Dimensions	66 (L) x 100 (W) mm 2 - 19/32" (L) x 3 - 15/16" (W)	
Weight	0.83 kg 1.81 Lbs	
Leadwire Length	300 mm 11 - 13/16"	

*1: Non-UL product. 120 V is made to oder.

Application Examples

Massage Devices

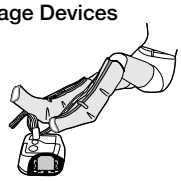

Bedsore Prevention Mattress

External Dimensions (Unit: mm)

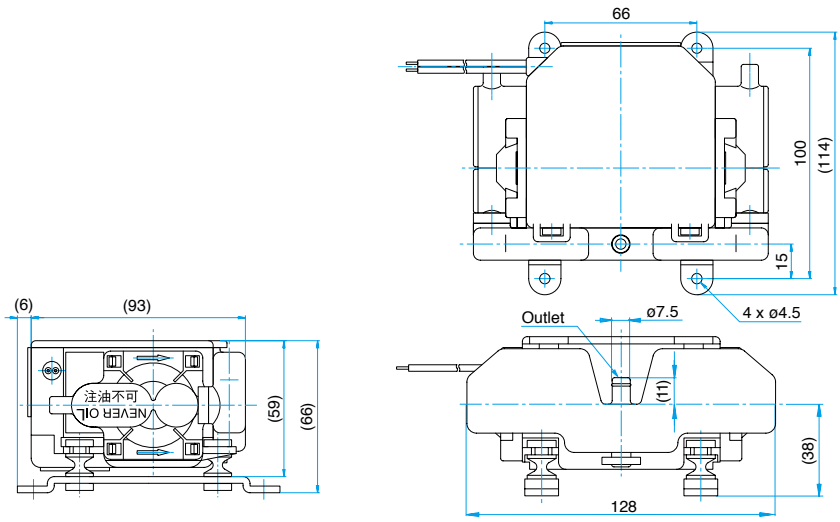

Compressor and Vacuum Pump

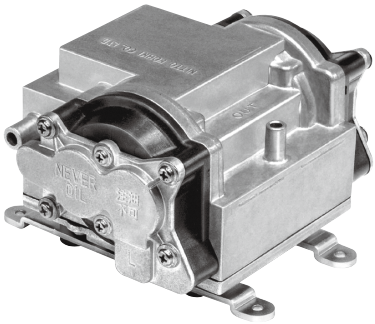

Model VC0201B

Dual Type

120 V/230 V | 230 V | 230 V

Airflow & Power Consumption

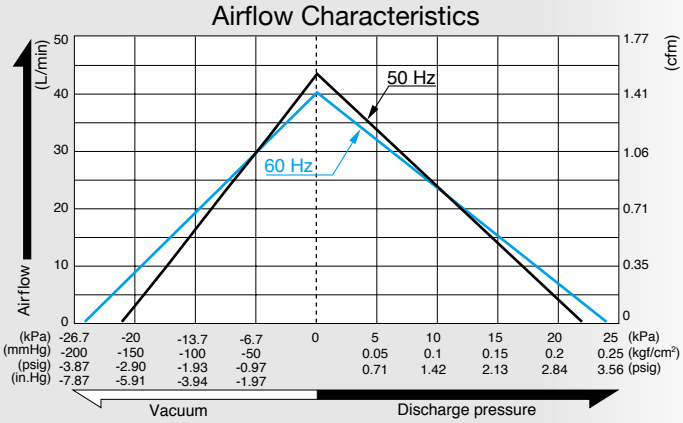

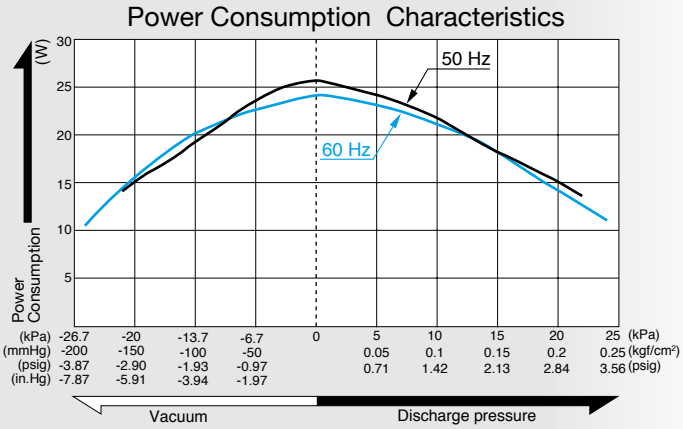

Specifications

Rated Pressure	10 kPa (0.1 kgf/cm²) 0.1 bar 1.42 psig	
Rated Airflow	20 L/min 0.71 cfm	
Maximum Pressure	18 kPa (0.18 kgf/cm²) 0.18 bar 2.56 psig	
Attainable Vacuum	-18.7 kPa (-140 mmHg) -187 mbar -5.51 in.Hg	
Rated Voltage	120 V AC	230 V AC
Power Consumption	21 W	
Rated Frequency	60 Hz	50 Hz
Rated Performance	10,000 hours	
Working Pressure Range	-18.7 kPa to 18 kPa (-140 mmHg to 0.18 kgf/cm²) -187 mbar to 0.18 bar -5.51 in.Hg to 2.56 psig	
Inlet	10.5 mm O.D. hose barb	
Outlet	8.5 mm O.D. hose barb	
Duty Cycle	Continuous	
Coil Insulation Class	Class A for UL	
Mounting Dimensions	125 (L) x 56 (W) mm 4 - 59/64" (L) x 2 - 13/64" (W)	
Weight	1.7 kg 3.7 Lbs	
Leadwire Length	300 mm 11 - 13/16"	

Application Examples

Bedsore Prevention Mattress

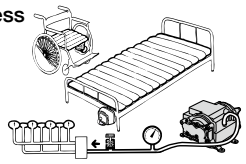

Solder Fume Suction

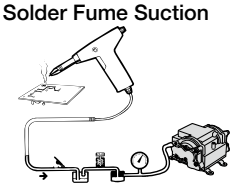

External Dimensions (Unit: mm)

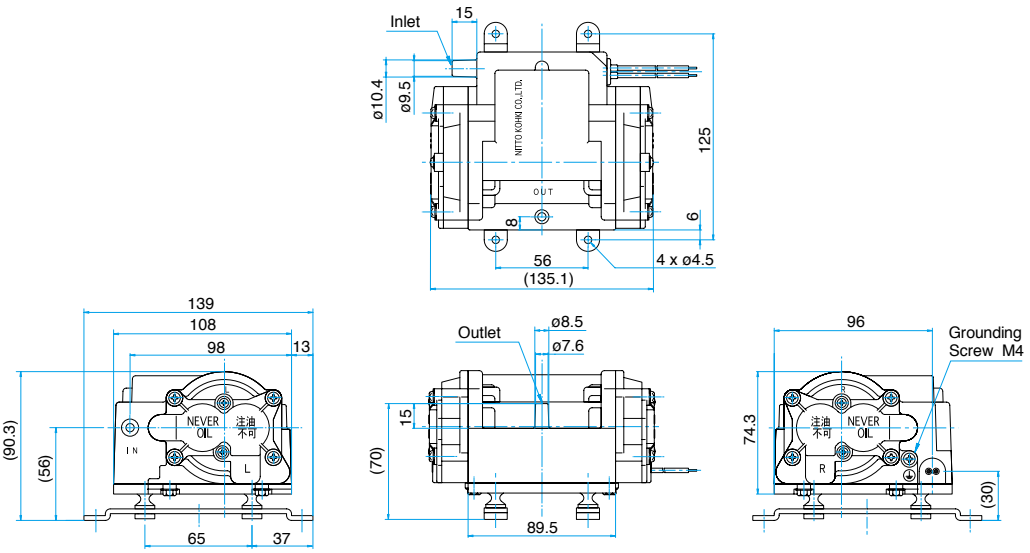

Compressor

Model VC0201B

Blower Type

120 V is made to order

CE 230 V | UKCA 230 V

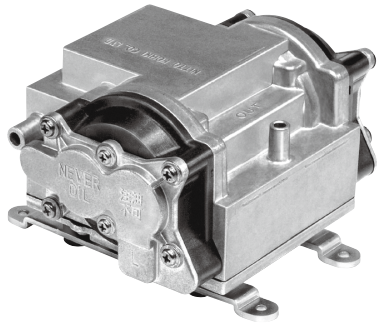

Airflow & Power Consumption

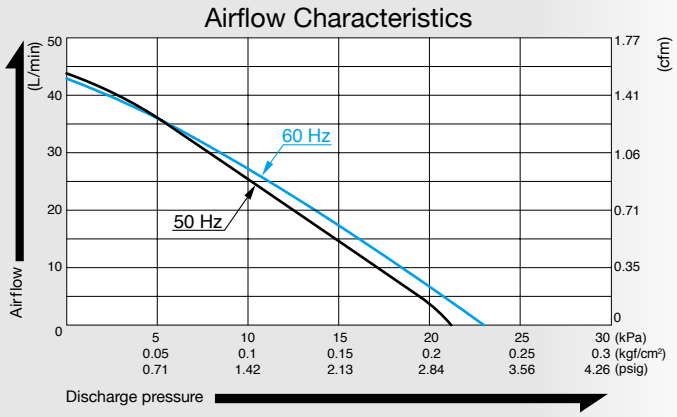

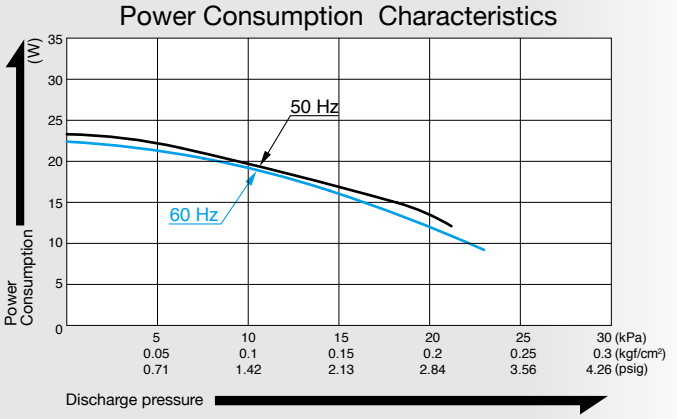

Specifications

Rated Pressure	10 kPa (0.1 kgf/cm²) 0.1 bar 1.42 psig	
Rated Airflow	20 L/min 0.71 cfm	
Maximum Pressure	18 kPa (0.18 kgf/cm²) 0.18 bar 2.56 psig	
Rated Voltage	120 V AC	230 V AC
Power Consumption	21 W	
Rated Frequency	60 Hz	50 Hz
Rated Performance	10,000 hours	
Working Pressure Range	0 to 18 kPa (0 to 0.18 kgf/cm²) 0 to 0.18 bar 0 to 2.56 psig	
Outlet	8.5 mm O.D. hose barb	
Duty Cycle	Continuous	
Coil Insulation Class	Class A for UL	Class E equivalent
Mounting Dimensions	125 (L) x 56 (W) mm 4 - 59/64" (L) x 2 - 13/64" (W)	
Weight	1.7 kg 3.7 Lbs	
Leadwire Length	300 mm 11 - 13/16"	

Application Examples

Bedsore Prevention Mattress

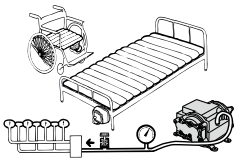

External Dimensions (Unit: mm)

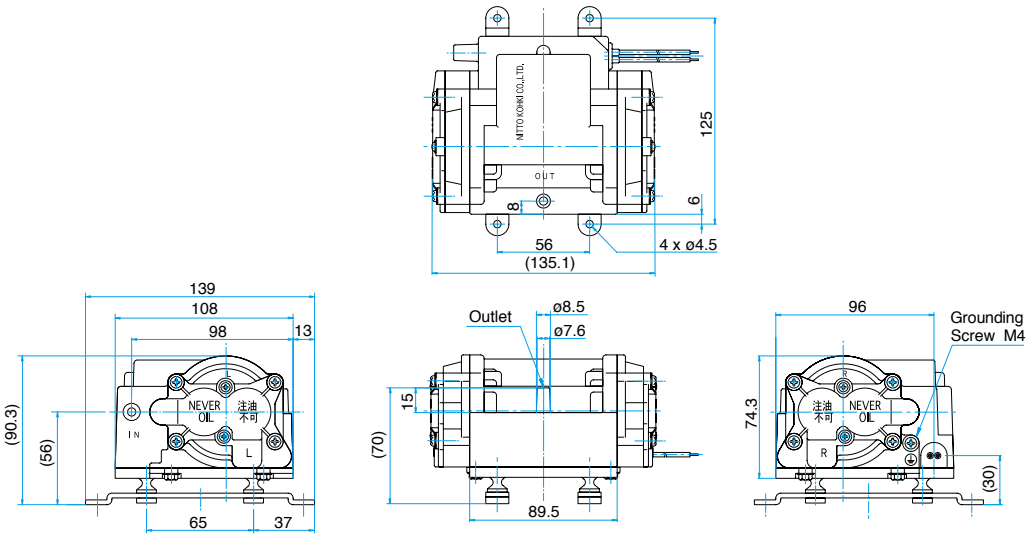

Compressor and Vacuum Pump

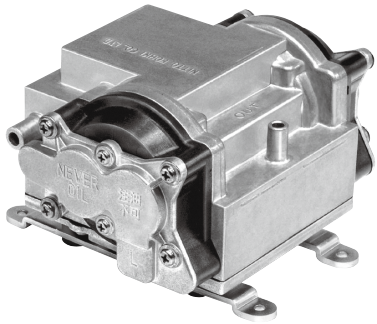

Model VC0301B

Dual Type

120 V | 230 V | 230 V

Airflow & Power Consumption

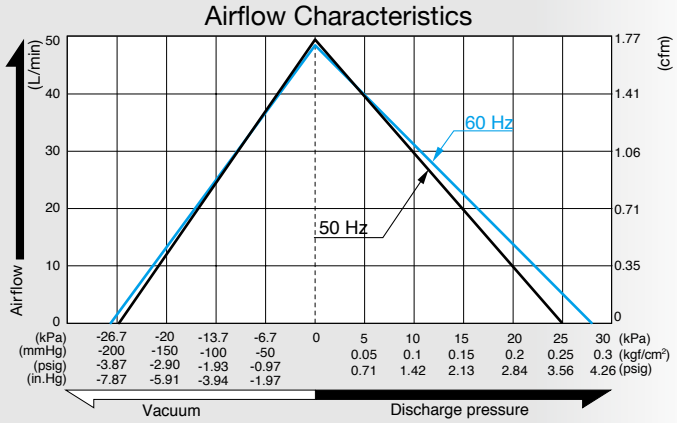

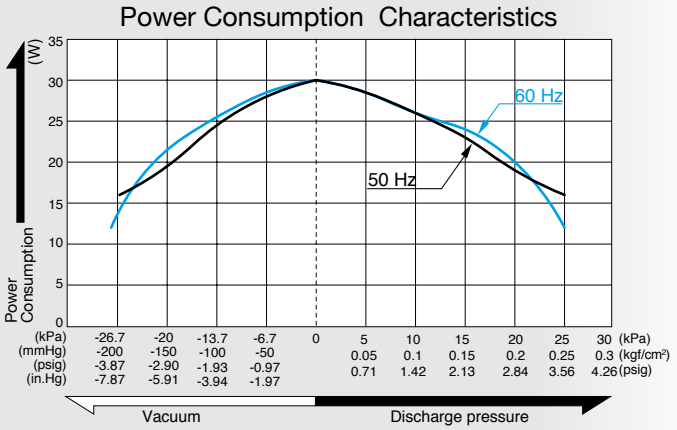

Specifications

Rated Pressure	10 kPa (0.1 kgf/cm²) 0.1 bar 1.42 psig	
Rated Airflow	25 L/min 0.88 cfm	
Maximum Pressure	20 kPa (0.2 kgf/cm²) 0.2 bar 2.84 psig	
Attainable Vacuum	-21.3 kPa (-160 mmHg) -213 mbar -6.3 in.Hg	
Rated Voltage	120 V AC	230 V AC
Power Consumption	27 W	
Rated Frequency	60 Hz	50 Hz
Rated Performance	10,000 hours	
Working Pressure Range	-21.3 kPa to 20 kPa (-160 mmHg to 0.2 kgf/cm²) -213 mbar to 0.2 bar -6.3 in.Hg to 2.84 psig	
Inlet	10.5 mm O.D. hose barb	
Outlet	8.5 mm O.D. hose barb	
Duty Cycle	Continuous	
Coil Insulation Class	Class B for UL	Class B equivalent
Mounting Dimensions	125 (L) x 56 (W) mm 4 - 59/64" (L) x 2 - 13/64" (W)	
Weight	1.7 kg 3.7 Lbs	
Leadwire Length	300 mm 11 - 13/16"	

Application Examples

Bedsore Prevention Mattress

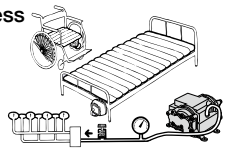

Solder Fume Suction

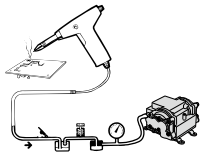

External Dimensions (Unit: mm)

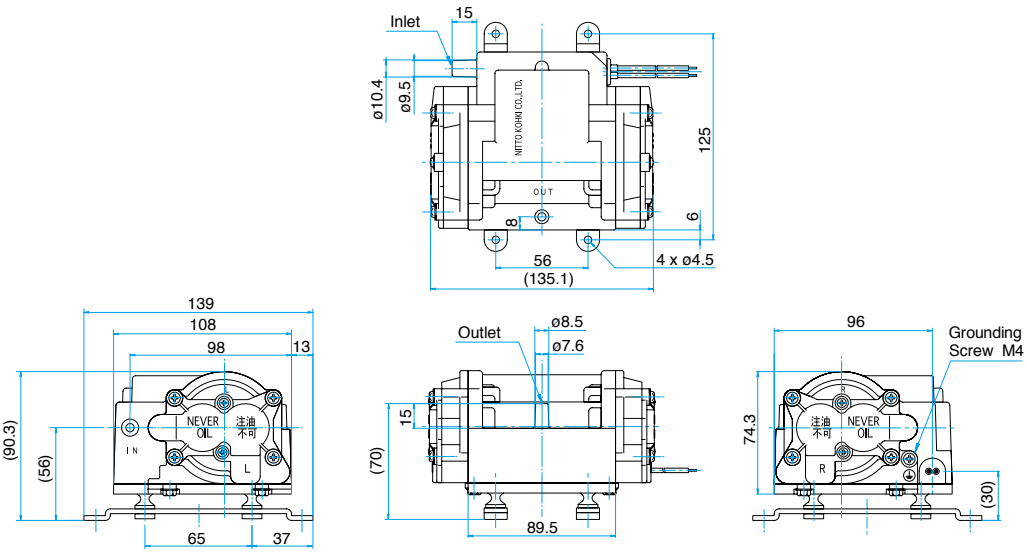

Compressor

Model VC0301B

Blower Type

120 V is made to order

CE 230 V | UKCA 230 V

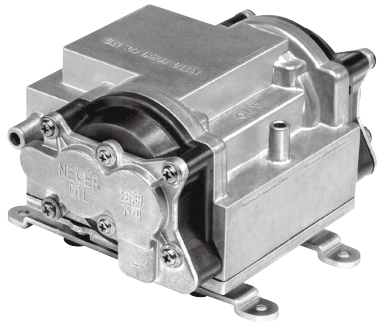

Airflow & Power Consumption

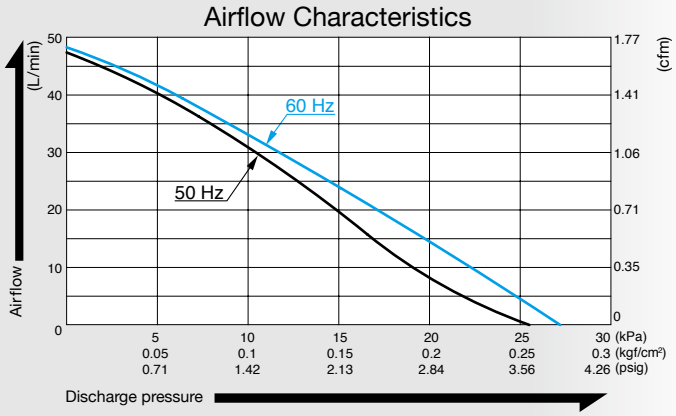

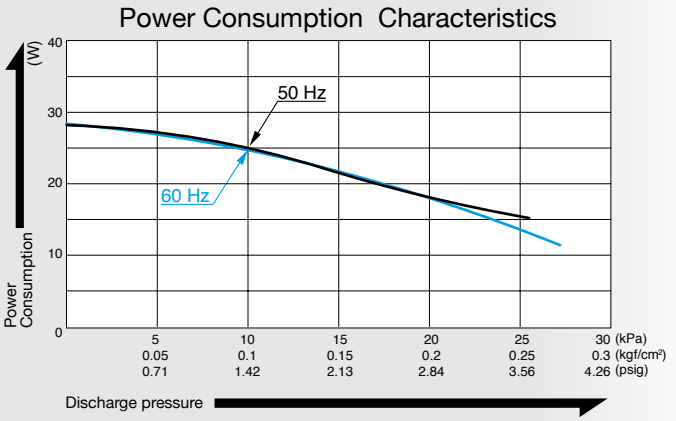

Specifications

Rated Pressure	10 kPa (0.1 kgf/cm²) 0.1 bar 1.42 psig	
Rated Airflow	25 L/min 0.88 cfm	
Maximum Pressure	20 kPa (0.2 kgf/cm²) 0.2 bar 2.84 psig	
Rated Voltage	120 V AC	230 V AC
Power Consumption	27 W	
Rated Frequency	60 Hz	50 Hz
Rated Performance	10,000 hours	
Working Pressure Range	0 to 20 kPa (0 to 0.2 kgf/cm²) 0 to 0.2 bar 0 to 2.84 psig	
Outlet	8.5 mm O.D. hose barb	
Duty Cycle	Continuous	
Coil Insulation Class	Class B equivalent	
Mounting Dimensions	125 (L) x 56 (W) mm 4 - 59/64" (L) x 2 - 13/64" (W)	
Weight	1.7 kg 3.7 Lbs	
Leadwire Length	300 mm 11 - 13/16"	

Application Examples

Bedsore Prevention Mattress

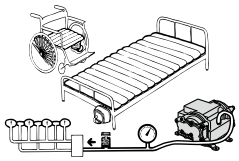

External Dimensions (Unit: mm)

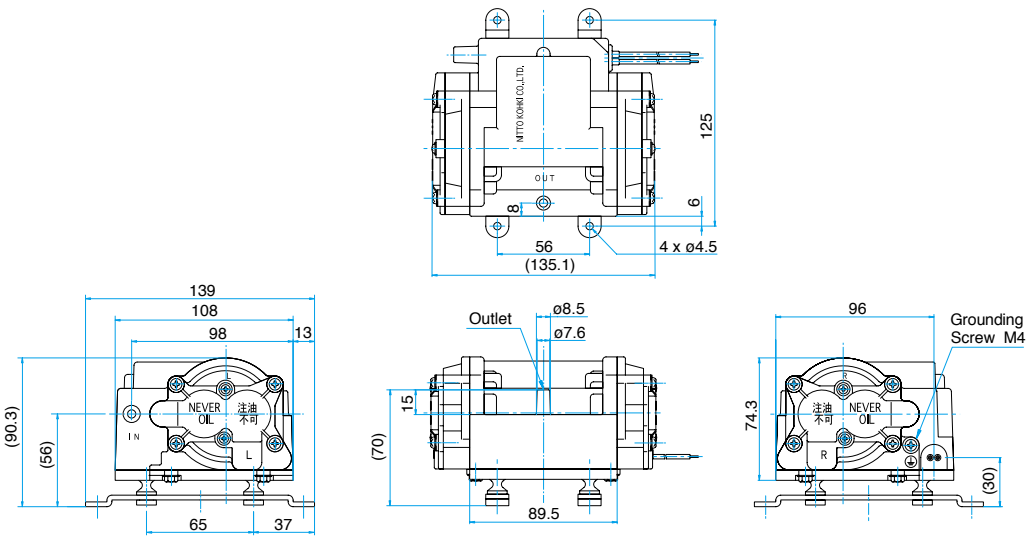

DC Motor Driven
Piston Pump
Diaphragm Pump

PISTON PUMP
DIAPHRAGM PUMP

DP series

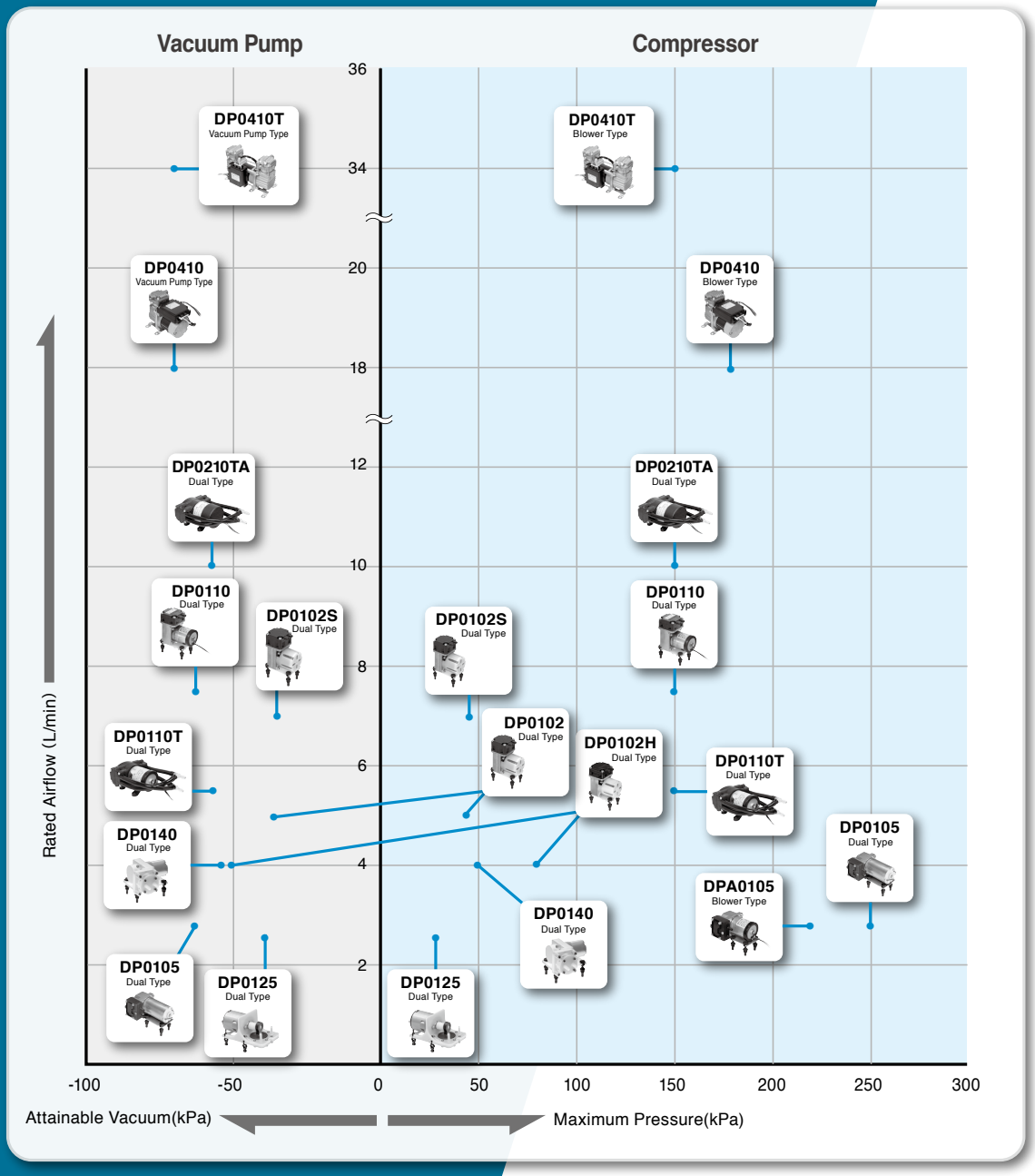

Page

Piston Pump

DP0105-X1 — 63
DP0105-Y1 — 64
DPA0105-X1 — 65
DPA0105-Y1 — 66
DP0410-X1 — 67
DP0410-Y1 — 68
DP0410-X2 — 69
DP0410-Y2 — 70
DP0410T-Y1 — 71
DP0410T-Y2 — 72

Diaphragm Pump

DP0125 — 73
DP0140 — 74
DP0102 — 75
DP0102S — 76
DP0102H-X1 — 77
DP0102H-X2 — 78
DP0110-X1 — 79
DP0110-Y1 — 80
DP0110-X3 — 81
DP0110T-X1 — 82
DP0110T-Y1 — 83
DP0210TA-Y1 — 84

Compressor and Vacuum Pump

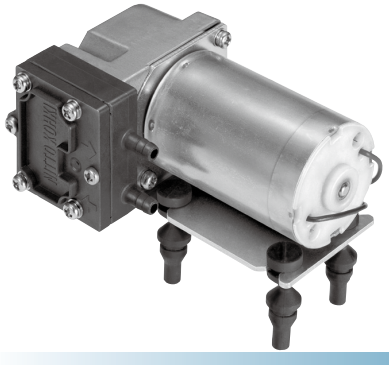

Model DP0105-X1

Brush DC Motor 12 V DC

CE 12 V UKCA 12 V

Airflow & Power Consumption

Airflow Characteristics

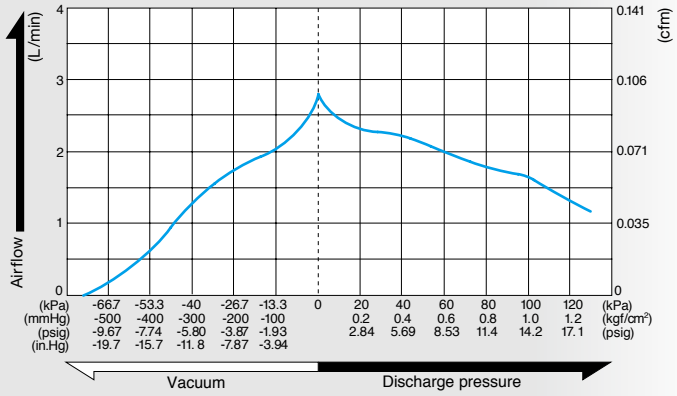

Current Characteristics

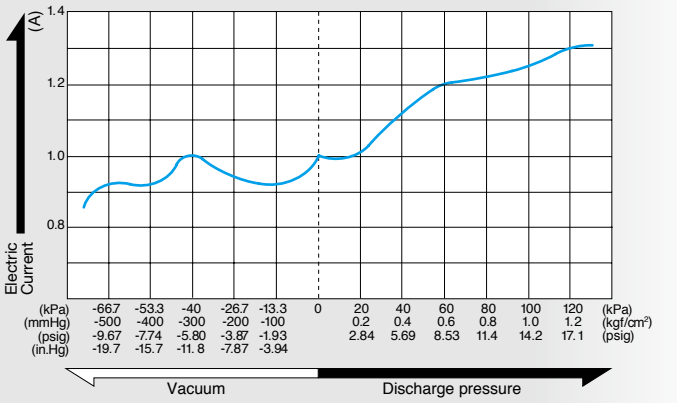

Specifications

Attainable Vacuum	-66.7 kPa (-500 mmHg) -667 mbar -19.7 in.Hg
Free Air Displacement	2.8 L/min 0.099 cfm
Rated Voltage	12 V DC
Maximum Pressure	250 kPa (2.5 kgf/cm²) 2.5 bar 35.6 psig
Maximum Current	1.9 A
Duty Cycle	30 minutes
Working Pressure Range	-66.7 to 100 kPa (-500 mmHg to 1 kgf/cm²) -667 mbar to 1 bar -19.7 in.Hg to 14.2 psig
Rated Performance (MTTF)	2,000 hours
Inlet	5 mm O.D. straight barb
Outlet	5 mm O.D. straight barb
Coil Insulation Class	Class E equivalent
Mounting Dimensions	42 (L) x 24.5 (W) mm 1 - 21/32" (L) x 1 - 31/32" (W)
Weight	0.36 kg 0.79 Lbs
Leadwire Length	360 mm 14 - 11/64"

Application Examples

Vending Machines

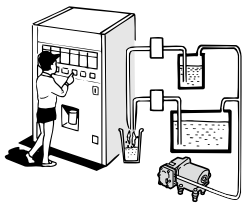

External Dimensions (Unit: mm)

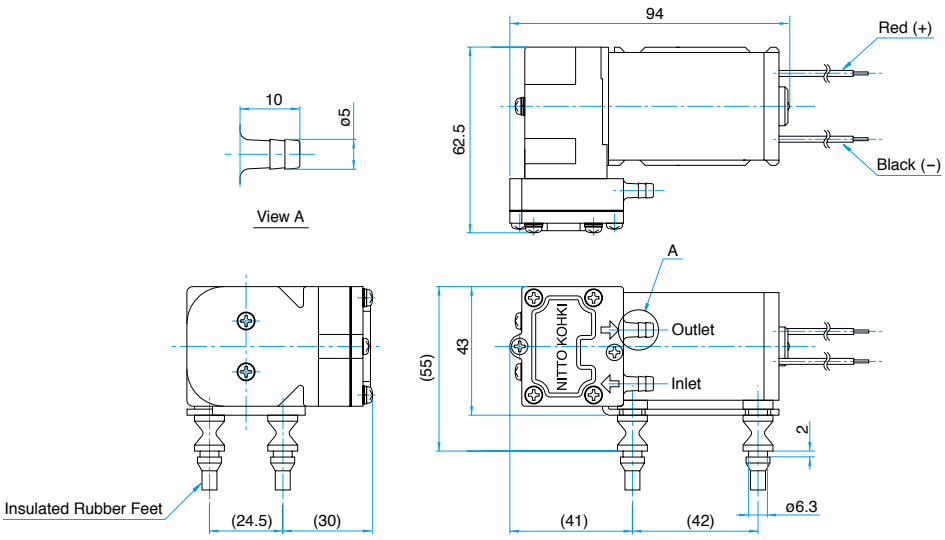

Compressor and Vacuum Pump

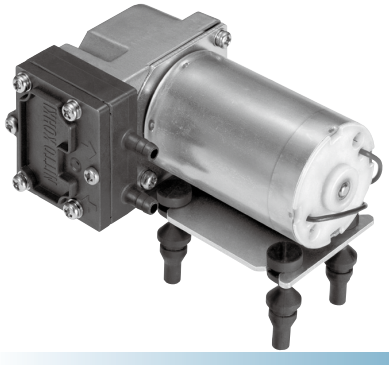

Model DP0105-Y1

CE 24 V | UK CA 24 V

Brush DC Motor **24 V DC**

Airflow & Power Consumption

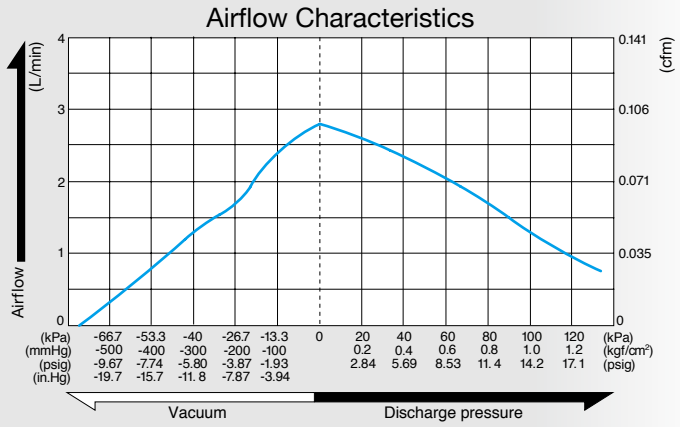

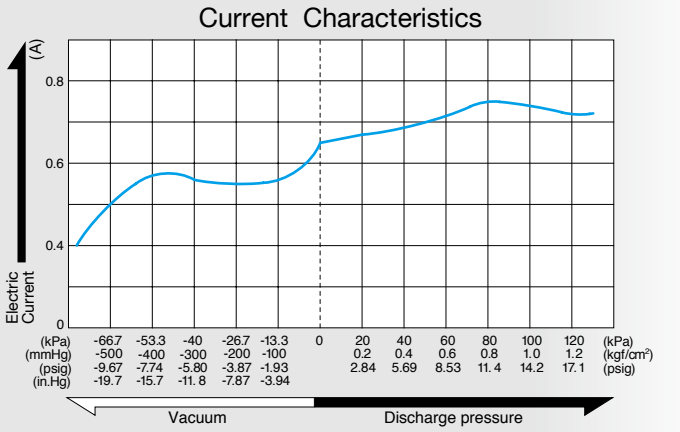

Specifications

Attainable Vacuum	-66.7 kPa (-500 mmHg) -667 mbar -19.7 in.Hg
Free Air Displacement	2.8 L/min 0.099 cfm
Rated Voltage	24 V DC
Maximum Pressure	250 kPa (2.5 kgf/cm²) 2.5 bar 35.6 psig
Maximum Current	0.95 A
Duty Cycle	30 minutes
Working Pressure Range	-66.7 to 100 kPa (-500 mmHg to 1 kgf/cm²) -667 mbar to 1 bar -19.7 in.Hg to 14.2 psig
Rated Performance (MTTF)	2,000 hours
Inlet	5 mm O.D. straight barb
Outlet	5 mm O.D. straight barb
Coil Insulation Class	Class E equivalent
Mounting Dimensions	42 (L) x 24.5 (W) mm 1 - 21/32" (L) x 1 - 31/32" (W)
Weight	0.36 kg 0.79 Lbs
Leadwire Length	360 mm 14 - 11/64"

Application Examples

Vending Machines

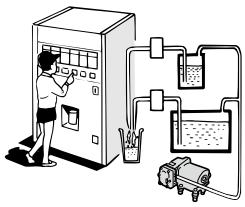

External Dimensions (Unit: mm)

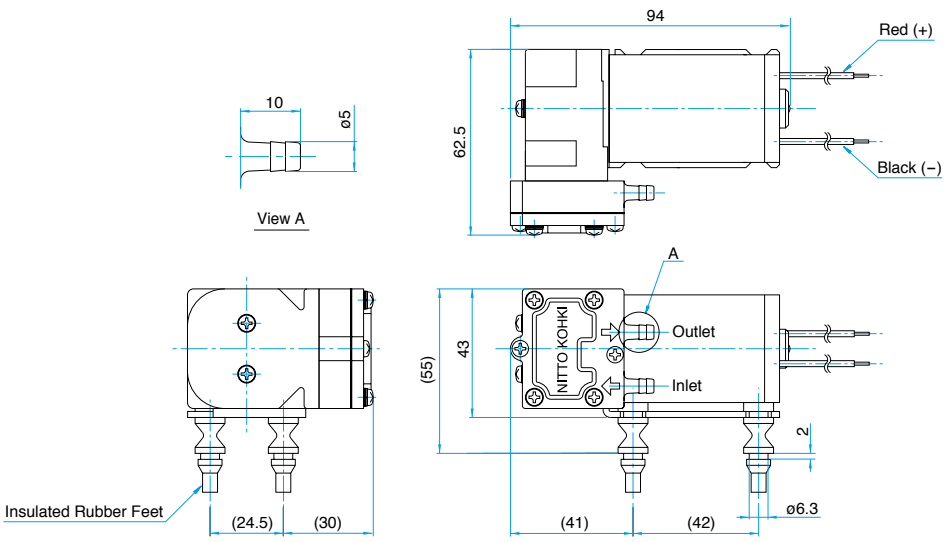

Compressor

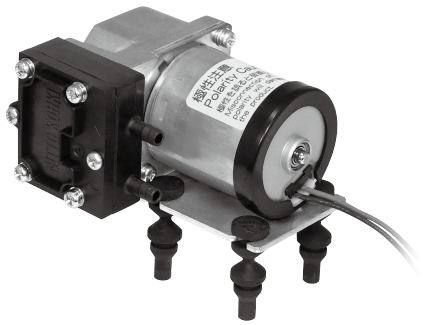

Model DPA0105-X1

Brushless DC Motor 12 V DC

CE 12 V UKCA 12 V

Airflow & Power Consumption

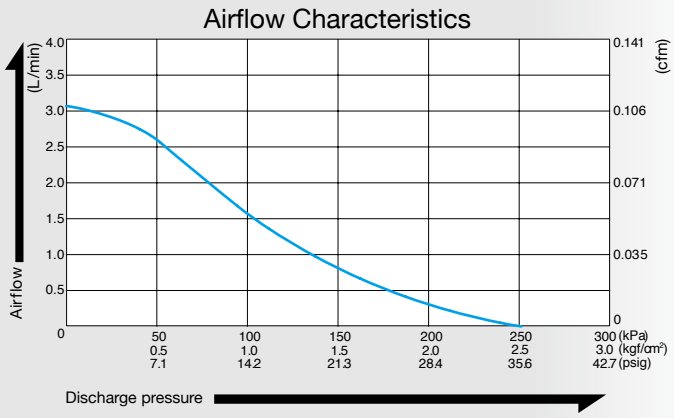

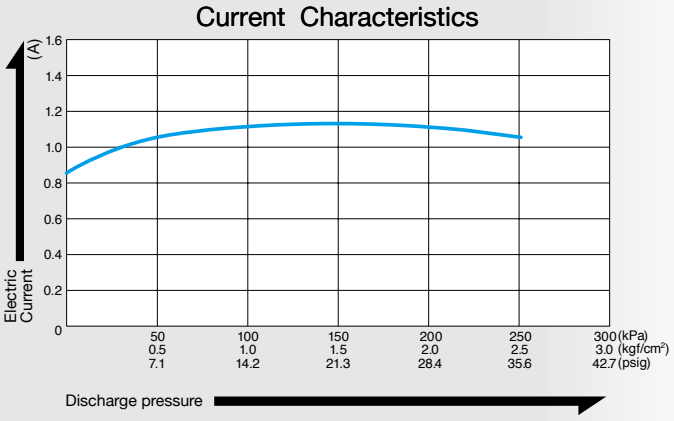

Specifications

Free Air Displacement	2.8 L/min 0.099 cfm
Rated Voltage	12 V DC
Maximum Pressure	220 kPa (2.2 kgf/cm²) 2.2 bar 31.3 psig
Maximum Current	1.4 A
Duty Cycle	Continuous
Working Pressure Range	0 to 100 kPa (0 to 1 kgf/cm²) 0 to 1 bar 0 to 14.2 psig
Rated Performance (MTTF)	5,000 hours
Inlet	5 mm O.D. straight barb
Outlet	5 mm O.D. straight barb
Coil Insulation Class	Class A equivalent
Mounting Dimensions	32 (L) x 27.5 (W) mm 1 - 17/64" (L) x 1 - 5/64" (W)
Weight	0.3 kg 0.66 Lbs
Leadwire Length	360 mm 14 - 11/64"

Application Examples

Vending Machines

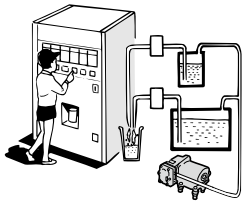

External Dimensions (Unit: mm)

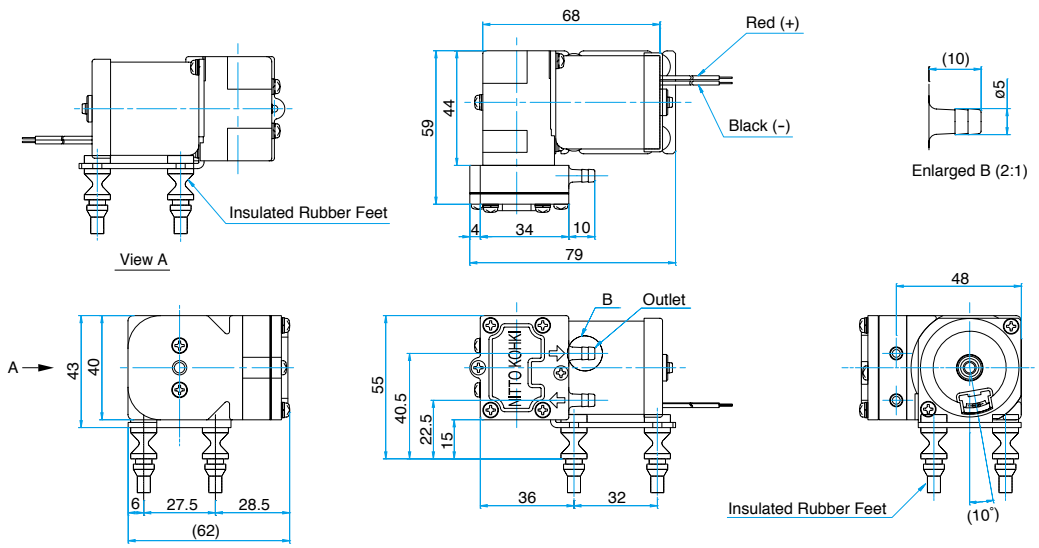

Compressor

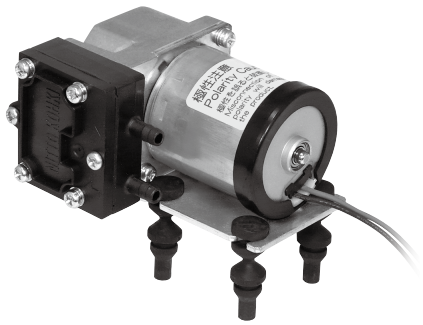

Model DPA0105-Y1

CE 24 V | UK CA 24 V

Brushless DC Motor **24 V DC**

Airflow & Power Consumption

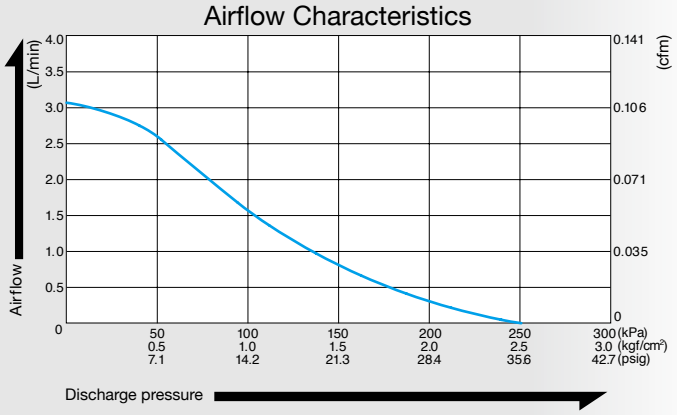

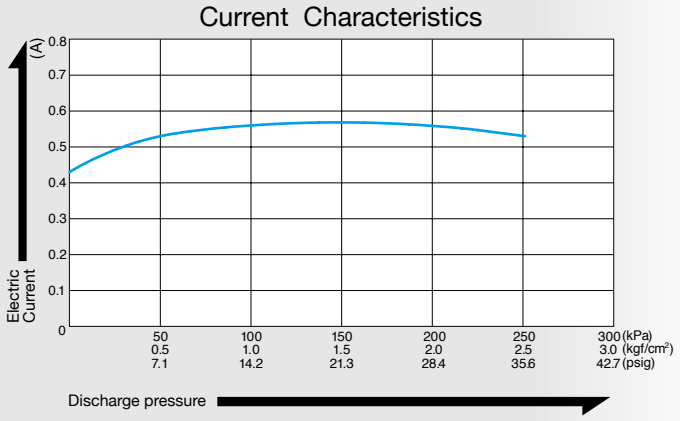

Specifications

Free Air Displacement	2.8 L/min 0.099 cfm
Rated Voltage	24 V DC
Maximum Pressure	220 kPa (2.2 kgf/cm²) 2.2 bar 31.3 psig
Maximum Current	0.7 A
Duty Cycle	Continuous
Working Pressure Range	0 to 100 kPa (0 to 1 kgf/cm²) 0 to 1 bar 0 to 14.2 psig
Rated Performance (MTTF)	5,000 hours
Inlet	5 mm O.D. straight barb
Outlet	5 mm O.D. straight barb
Coil Insulation Class	Class A equivalent
Mounting Dimensions	32 (L) x 27.5 (W) mm 1 - 17/64" (L) x 1 - 5/64" (W)
Weight	0.3 kg 0.66 Lbs
Leadwire Length	360 mm 14 - 11/64"

Application Examples

Vending Machines

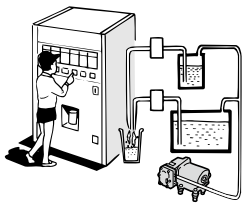

External Dimensions (Unit: mm)

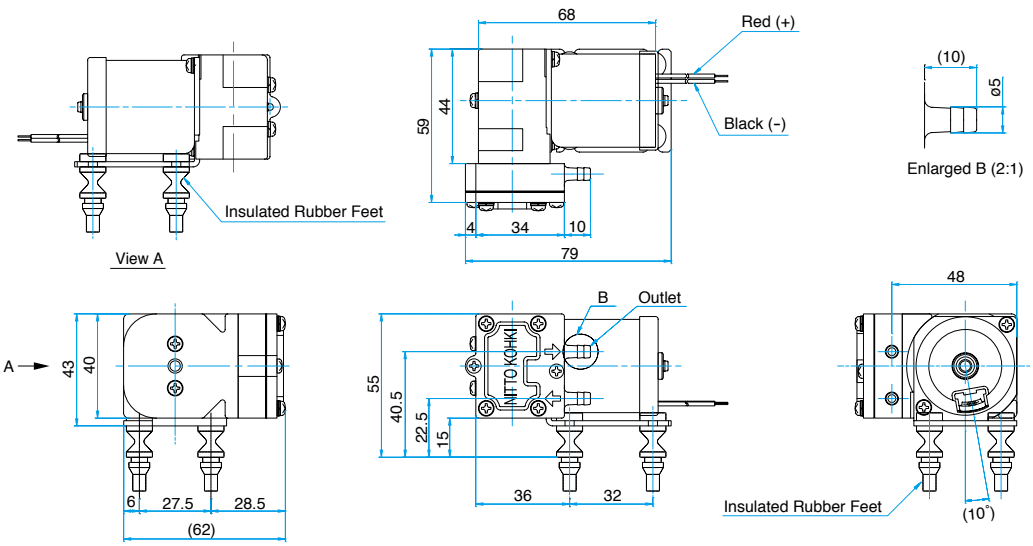

Vacuum Pump

Model DP0410-X1

PWM controllable

Brushless DC Motor 12 V DC

CE 12 V | UKCA 12 V

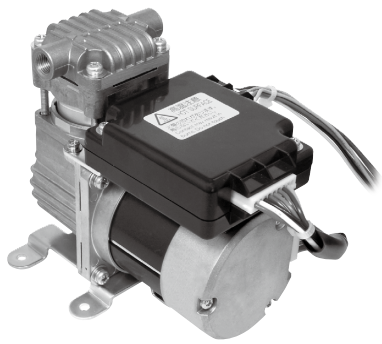

Airflow & Power Consumption

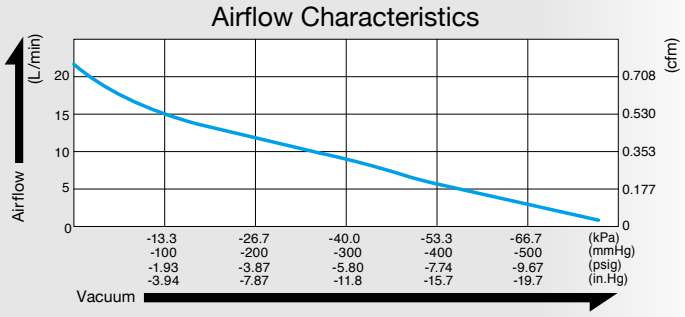

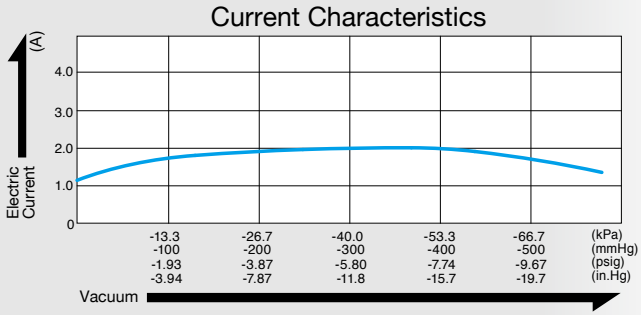

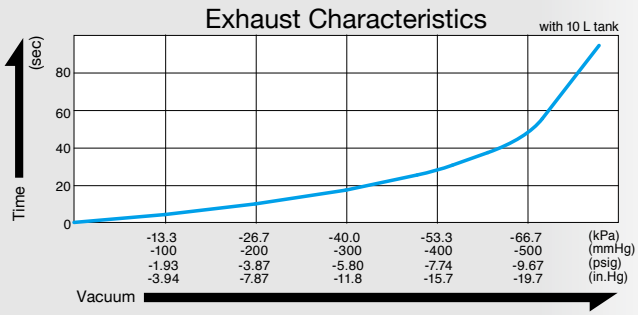

Specifications

Attainable Vacuum	-77.3 kPa (-580 mmHg) -773 mbar -22.8 in.Hg
Free Air Displacement	18 L/min 0.64 cfm
Rated Voltage	12 V DC
Maximum Current	2.5 A
Duty Cycle	Continuous
Rated Performance (MTTF)	10,000 hours
Inlet	Rc1/8
Outlet	Rc1/8
Coil Insulation Class	Class E equivalent
Mounting Dimensions	70 (L) x 45 (W) mm 2 - 3/4" (L) x 1 - 49/64" (W)
Weight	1.1 kg 2.4 Lbs
Leadwire Length	285 mm 11 - 7/32"

Application Examples

Vacuum glass sheet handling equipment

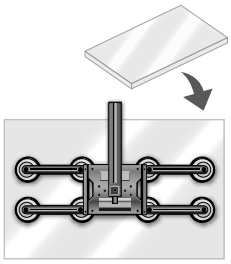

External Dimensions (Unit: mm)

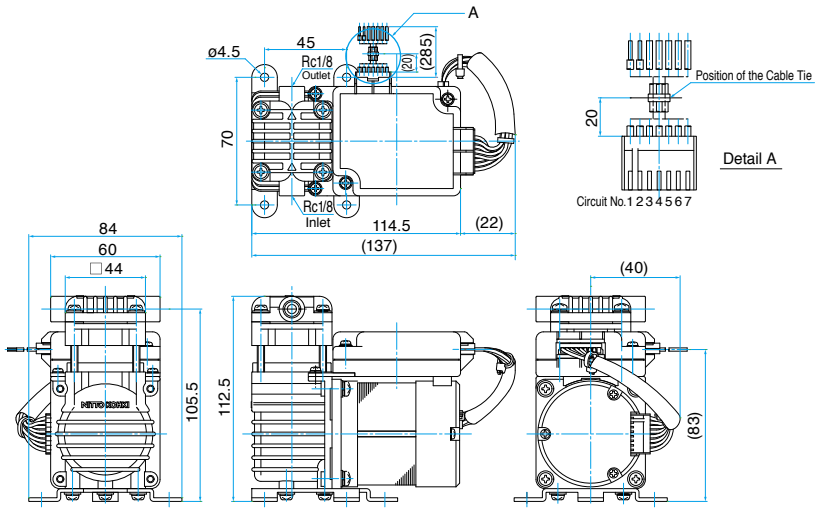

Connection Table

		Power Source		Control Signal				
Circuit No.		1	2	3	4	5	6	7
Cord Color		Red	Black	Brown	Orange	Yellow	Green	Gray
Function		V+	V-	DRIVE /FREE	PULSE	ALARM	SPEED	SGND
Option	Function Off	ON		OFF				
	Function On	ON		ON				
Cord Size		AWG20		AWG22				
Line Type		UL1007						

*Control function is "OFF" by default.

- Be sure to secure the lead wires with a cable tie. (See the detail A.) If they are not secured, poor contact of the connector may occur and result in failure.
- For the details of wiring, please see the user's instructions.

Vacuum Pump

Model DP0410-Y1

PWM controllable

Brushless DC Motor 24 V DC

CE 24 V | UKCA 24 V

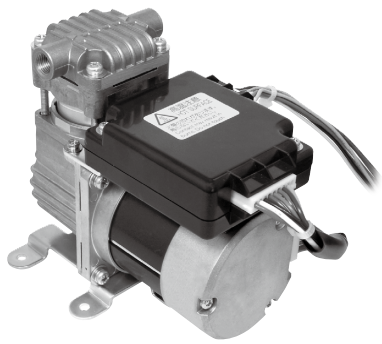

Airflow & Power Consumption

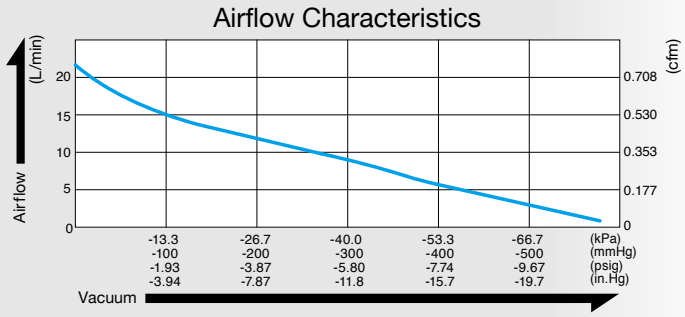

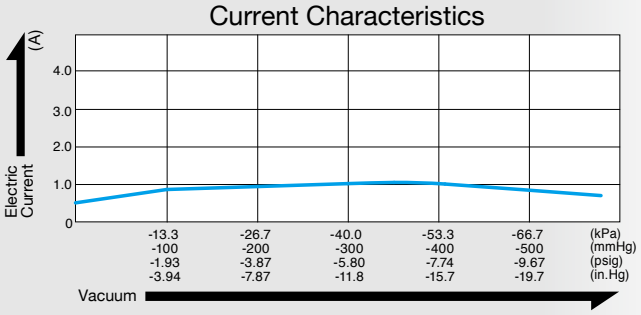

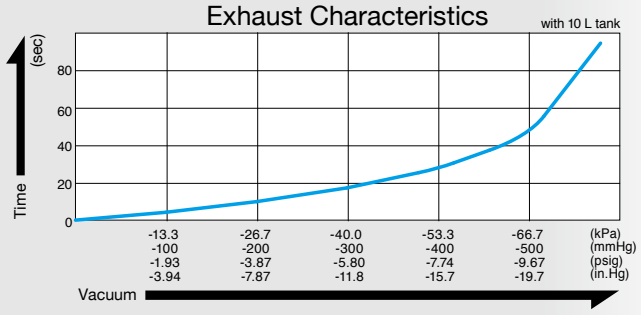

Specifications

Attainable Vacuum	-77.3 kPa (-580 mmHg) -773 mbar -22.8 in.Hg
Free Air Displacement	18 L/min 0.64 cfm
Rated Voltage	24 V DC
Maximum Current	1.5 A
Duty Cycle	Continuous
Rated Performance (MTTF)	10,000 hours
Inlet	Rc1/8
Outlet	Rc1/8
Coil Insulation Class	Class E equivalent
Mounting Dimensions	70 (L) x 45 (W) mm 2 - 3/4" (L) x 1 - 49/64" (W)
Weight	1.1 kg 2.4 Lbs
Leadwire Length	285 mm 11 - 7/32"

Application Examples

Vacuum glass sheet handling equipment

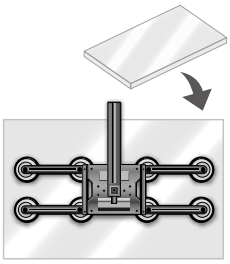

External Dimensions (Unit: mm)

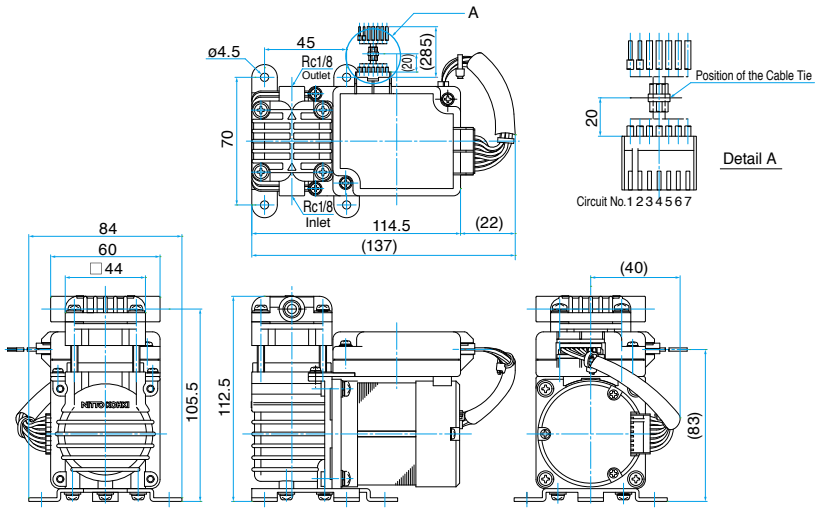

Connection Table

		Power Source		Control Signal				
Circuit No.		1	2	3	4	5	6	7
Cord Color		Red	Black	Brown	Orange	Yellow	Green	Gray
Function		V+	V-	DRIVE /FREE	PULSE	ALARM	SPEED	SGND
Option	Function Off	ON		OFF				
	Function On	ON		ON				
Cord Size		AWG20		AWG22				
Line Type		UL1007						

*Control function is "OFF" by default.

- Be sure to secure the lead wires with a cable tie. (See the detail A.) If they are not secured, poor contact of the connector may occur and result in failure.
- For the details of wiring, please see the user's instructions.

Compressor

Model DP0410-X2

PWM controllable

Brushless DC Motor 12 V DC

CE 12 V | UK CA 12 V

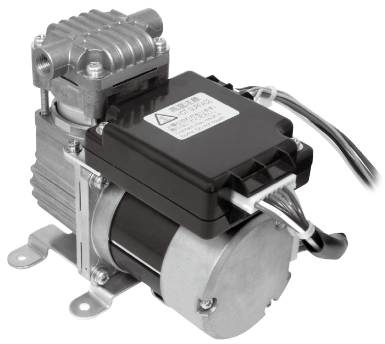

Airflow & Power Consumption

Airflow Characteristics

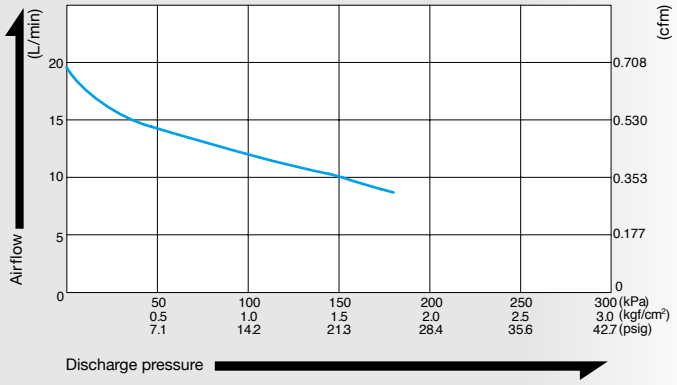

Current Characteristics

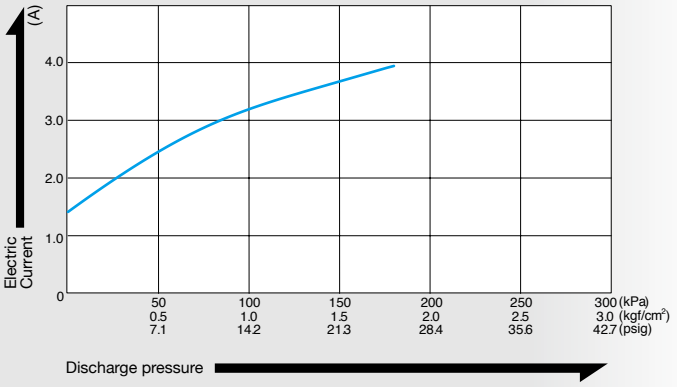

Specifications

Free Air Displacement	18 L/min 0.64 cfm
Rated Voltage	12 V DC
Maximum Pressure	180 kPa (1.8 kgf/cm²) 1.8 bar 25.6 psig
Maximum Current	5.0 A
Duty Cycle	Continuous
Working Pressure Range	0 to 180 kPa (0 to 1.8 kgf/cm²) 0 to 1.8 bar 0 to 25.6 psig
Rated Performance (MTTF)	10,000 hours
Inlet	ISO RC 1/8
Outlet	ISO RC 1/8
Coil Insulation Class	Class E equivalent
Mounting Dimensions	70 (L) x 45 (W) mm 2 - 3/4" (L) x 1 - 49/64" (W)
Weight	1.1 kg 2.4 Lbs
Leadwire Length	285 mm 11 - 7/32"

Application Examples

Air Cylinder/Chuck Driver

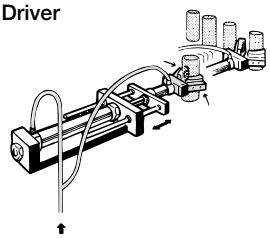

External Dimensions (Unit: mm)

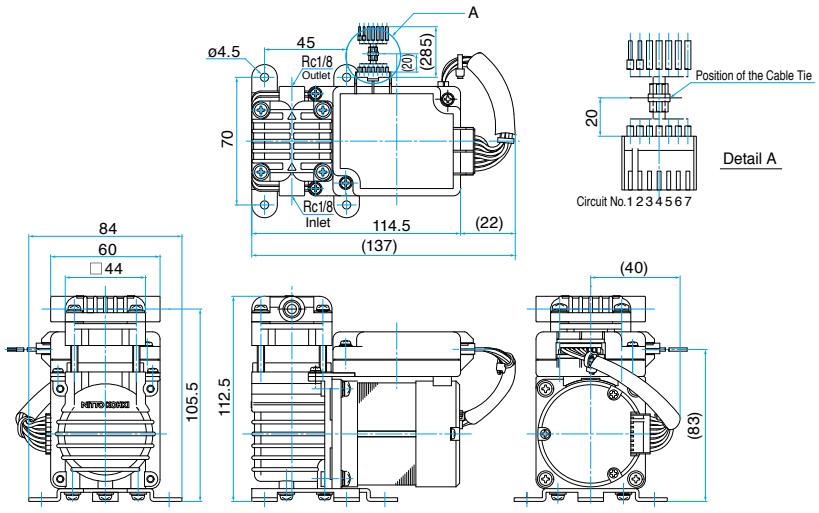

Connection Table

		Power Source		Control Signal				
Circuit No.		1	2	3	4	5	6	7
Cord Color		Red	Black	Brown	Orange	Yellow	Green	Gray
Function		V+	V-	DRIVE /FREE	PULSE	ALARM	SPEED	SGND
Option	Function Off	ON		OFF				
	Function On	ON		ON				
Cord Size		AWG20		AWG22				
Line Type		UL1007						

*Control function is "OFF" by default.

- Be sure to secure the lead wires with a cable tie. (See the detail A.) If they are not secured, poor contact of the connector may occur and result in failure.
- For the details of wiring, please see the user's instructions.

Compressor

Model DP0410-Y2

PWM controllable

Brushless DC Motor 24 V DC

CE 24 V | UK CA 24 V

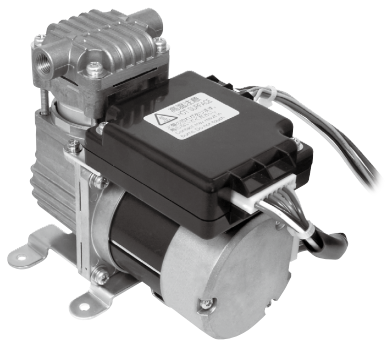

Airflow & Power Consumption

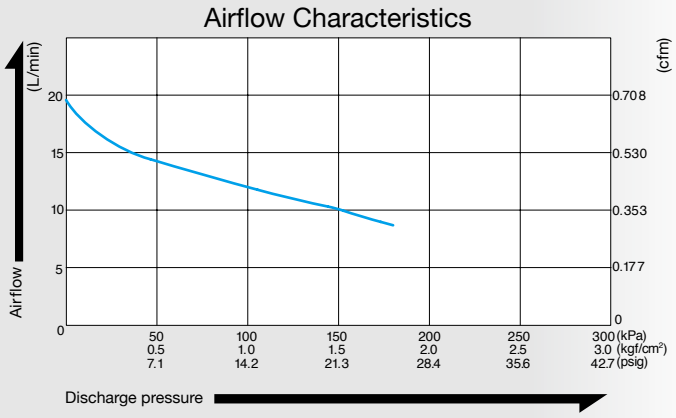

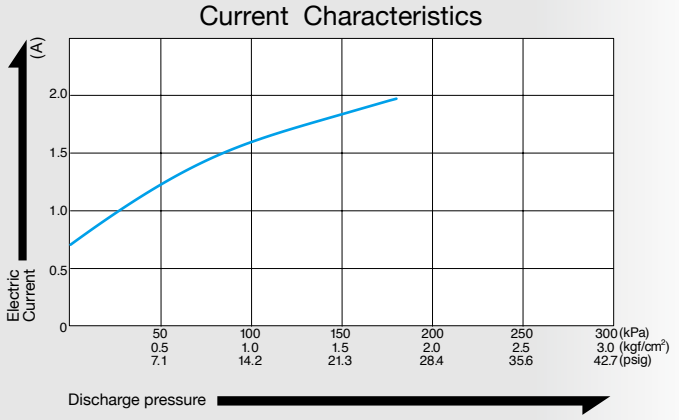

Specifications

Free Air Displacement	18 L/min 0.64 cfm
Rated Voltage	24 V DC
Maximum Pressure	180 kPa (1.8 kgf/cm²) 1.8 bar 25.6 psig
Maximum Current	2.7 A
Duty Cycle	Continuous
Working Pressure Range	0 to 180 kPa (0 to 1.8 kgf/cm²) 0 to 1.8 bar 0 to 25.6 psig
Rated Performance (MTTF)	10,000 hours
Inlet	ISO RC 1/8
Outlet	ISO RC 1/8
Coil Insulation Class	Class E equivalent
Mounting Dimensions	70 (L) x 45 (W) mm 2 - 3/4" (L) x 1 - 49/64" (W)
Weight	1.1 kg 2.4 Lbs
Leadwire Length	285 mm 11 - 7/32"

Application Examples

Air Cylinder/Chuck Driver

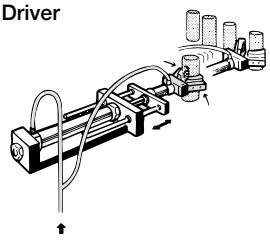

External Dimensions (Unit: mm)

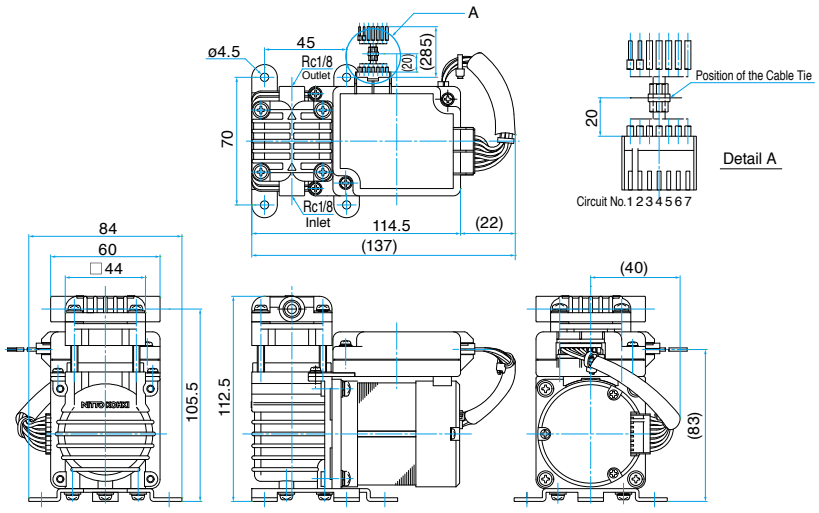

Connection Table

		Power Source		Control Signal				
Circuit No.		1	2	3	4	5	6	7
Cord Color		Red	Black	Brown	Orange	Yellow	Green	Gray
Function		V+	V-	DRIVE /FREE	PULSE	ALARM	SPEED	SGND
Option	Function Off	ON		OFF				
	Function On	ON		ON				
Cord Size		AWG20		AWG22				
Line Type		UL1007						

*Control function is "OFF" by default.

- Be sure to secure the lead wires with a cable tie. (See the detail A.) If they are not secured, poor contact of the connector may occur and result in failure.
- For the details of wiring, please see the user's instructions.

Vacuum Pump

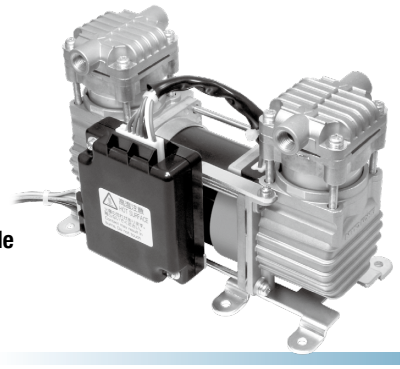

Model DP0410T-Y1

PWM controllable

Brushless DC Motor 24 V DC

CE 24 V | UKCA 24 V

Airflow & Power Consumption

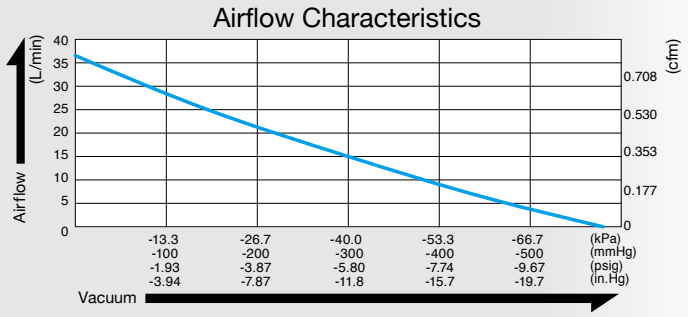

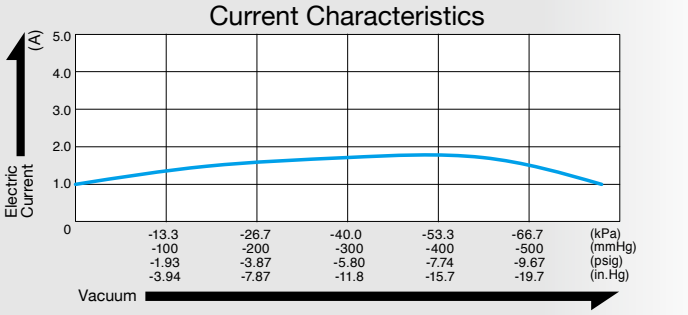

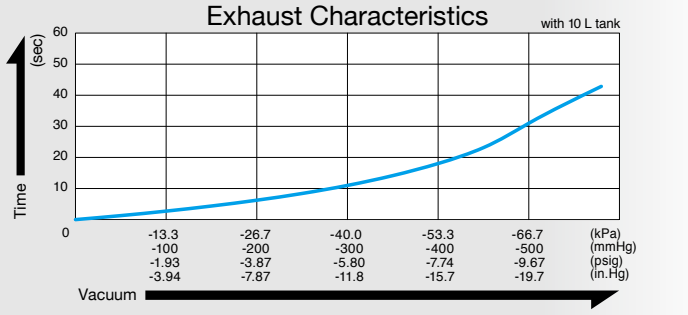

Specifications

Attainable Vacuum	-77.3 kPa (-580 mmHg) -773 mbar -22.8 in.Hg
Free Air Displacement	34 L/min 1.2 cfm
Rated Voltage	24 V DC
Maximum Current	2.5 A
Duty Cycle	Continuous
Rated Performance (MTTF)	5,000 hours
Inlet	Rc1/8
Outlet	Rc1/8
Coil Insulation Class	Class E equivalent (For DC motor)
Mounting Dimensions	166 (L) x 84 (W) mm 6 - 17/32" (L) x 3 - 5/16" (W)
Weight	1.6 kg 3.5 Lbs
Leadwire Length	285 mm 11 - 7/32"

Application Examples

Vacuum glass sheet handling equipment

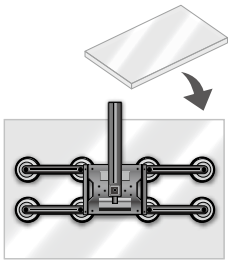

External Dimensions (Unit: mm)

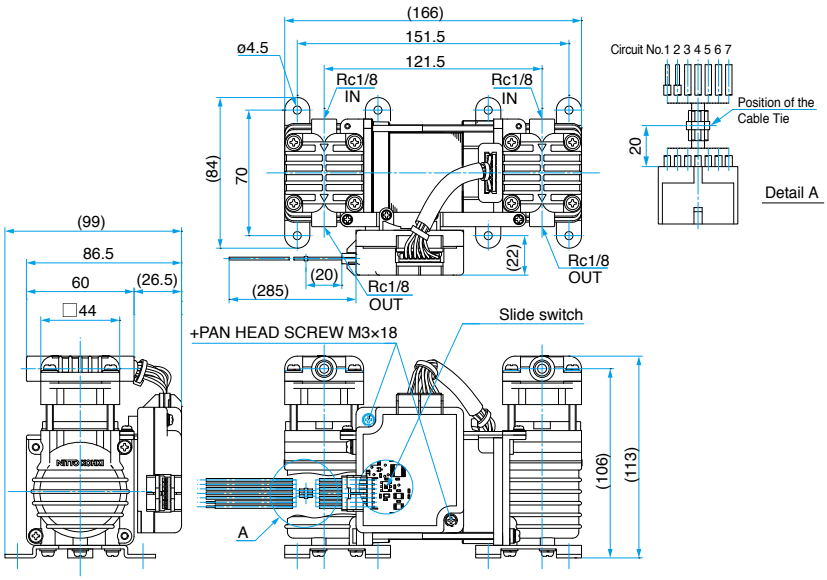

Connection Table

		Power Source		Control Signal				
Circuit No.		1	2	3	4	5	6	7
Cord Color		Red	Black	Brown	Orange	Yellow	Green	Gray
Function		V+	V-	DRIVE /FREE	PULSE	ALARM	SPEED	SGND
Option	Function Off	ON		OFF				
	Function On	ON		ON				
Cord Size		AWG20		AWG22				
Line Type		UL1007						

*Control function is "OFF" by default.

- Be sure to secure the lead wires with a cable tie. (See the detail A.) If they are not secured, poor contact of the connector may occur and result in failure.
- For the details of wiring, please see the user's instructions.

Compressor

Model DP0410T-Y2

PWM controllable

Brushless DC Motor 24 V DC

CE 24 V | UKCA 24 V

Airflow & Power Consumption

Airflow Characteristics

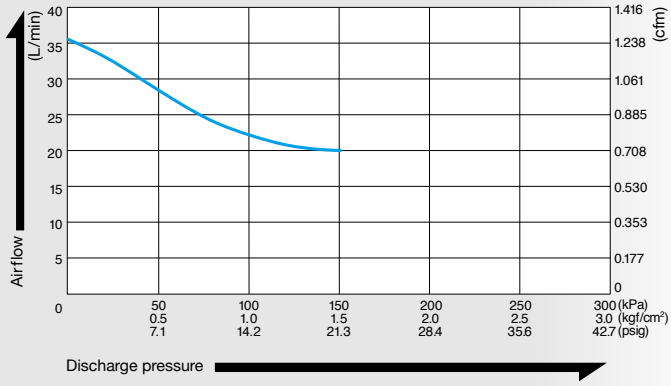

Current Characteristics

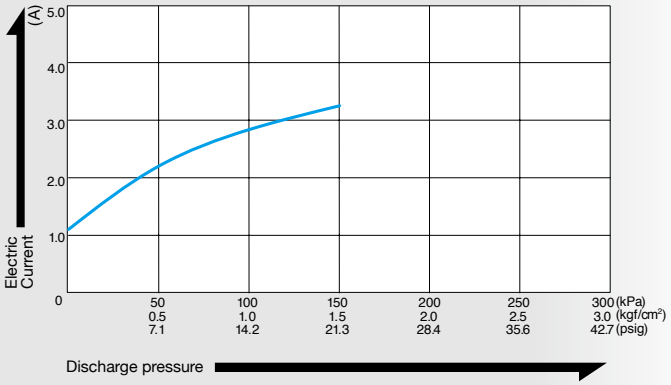

Specifications

Free Air Displacement	34 L/min 1.2 cfm
Rated Voltage	24 V DC
Maximum Pressure	150 kPa (1.5 kgf/cm²) 1.5 bar 21.3 psig
Maximum Current	4.0 A
Duty Cycle	Continuous
Working Pressure Range	0 to 150 kPa (0 to 1.5 kgf/cm²) 0 to 1.5 bar 0 to 21.3 psig
Rated Performance (MTTF)	5,000 hours
Inlet	RC 1/8
Outlet	RC 1/8
Coil Insulation Class	Class E equivalent (For DC motor)
Mounting Dimensions	166 (L) x 84 (W) mm 6 - 17/32" (L) x 3 - 5/16" (W)
Weight	1.6 kg 3.5 Lbs
Leadwire Length	285 mm 11 - 7/32"

Application Examples

Air Cylinder/Chuck Driver

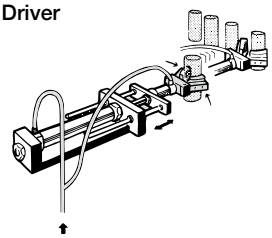

External Dimensions (Unit: mm)

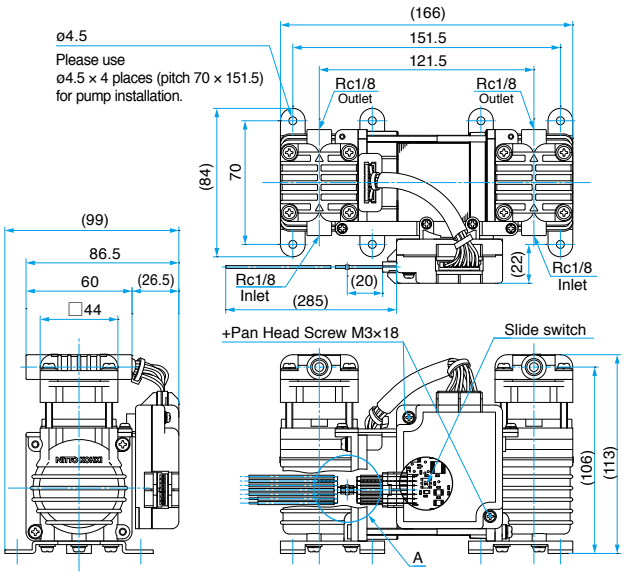

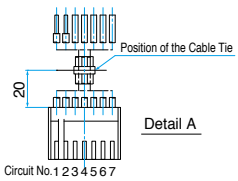

Connection Table

		Power Source		Control Signal				
Circuit No.		1	2	3	4	5	6	7
Cord Color		Red	Black	Brown	Orange	Yellow	Green	Gray
Function		V+	V-	DRIVE/FREE	PULSE	ALARM	SPEED	SGND
Option	Function Off	ON		OFF				
	Function On	ON		ON				
Cord Size		AWG20		AWG22				
Line Type		UL1007						

*Control function is "OFF" by default.

- Be sure to secure the lead wires with a cable tie. (See the detail A.) If they are not secured, poor contact of the connector may occur and result in failure.
- For the details of wiring, please see the user's instructions.

Compressor and Vacuum Pump

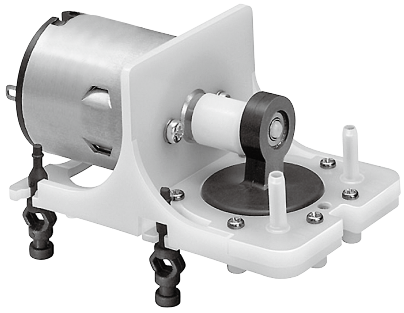

Model DP0125

CE 12 V | UK CA 12 V

Brush DC Motor 12 V DC

Airflow & Power Consumption

Airflow Characteristics

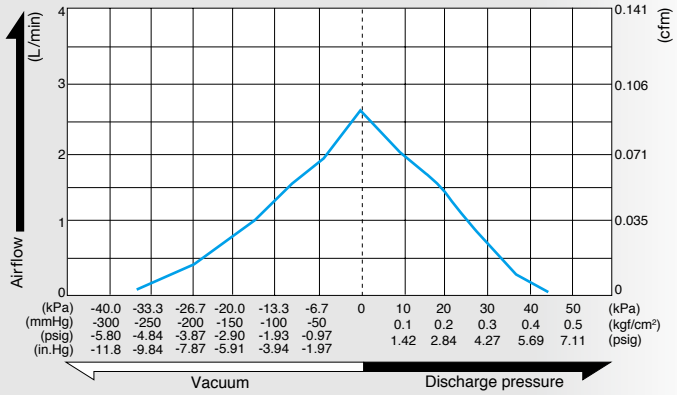

Current Characteristics

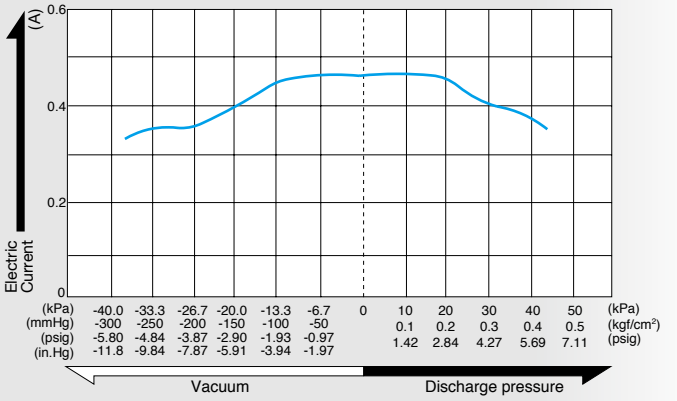

Specifications

Attainable Vacuum	-33.3 kPa (-250 mmHg) -333 mbar - 9.84 in.Hg
Free Air Displacement	2.5 L/min 0.088 cfm
Rated Voltage	12 V DC
Maximum Pressure	30 kPa (0.3 kgf/cm²) 0.3 bar 4.27 psig
Maximum Current	0.5 A
Duty Cycle	Continuous
Rated Performance (MTTF)	400 hours
Inlet	3 mm O.D. straight barb
Outlet	3 mm O.D. straight barb
Coil Insulation Class	Class E equivalent
Mounting Dimensions	32 (L) x 32.5 (W) mm 1 - 17/64" (L) x 1 - 9/32" (W)
Weight	0.08 kg 0.18 Lbs

Application Examples

Vacuum Sucking Pen

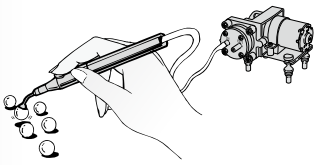

Blood Pressure Tester

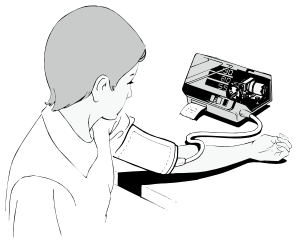

External Dimensions (Unit: mm)

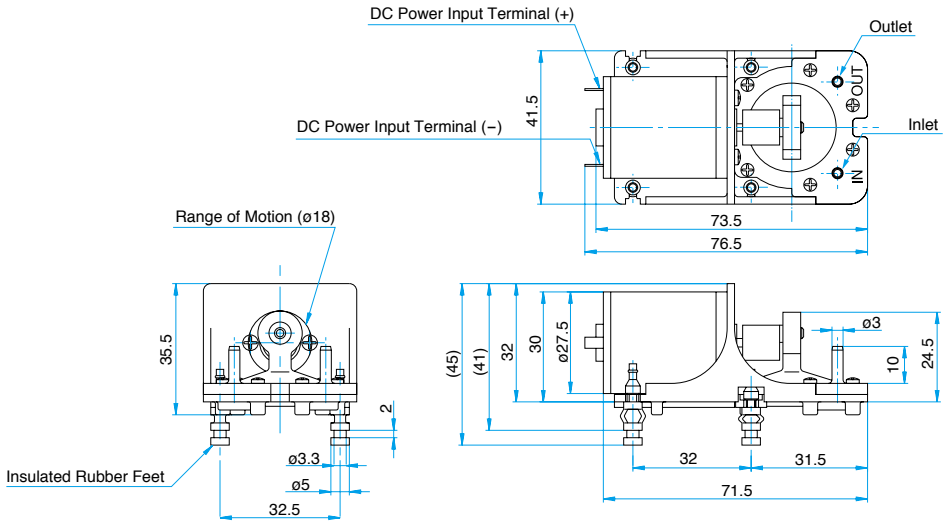

Compressor and Vacuum Pump

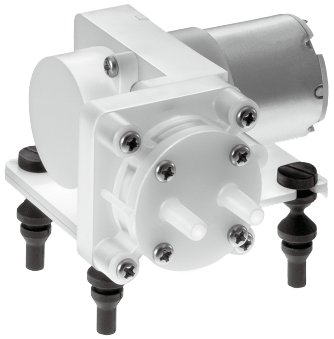

Model DP0140

CE 12 V | UK CA 12 V

Brush DC Motor **12 V DC**

Airflow & Power Consumption

Airflow Characteristics

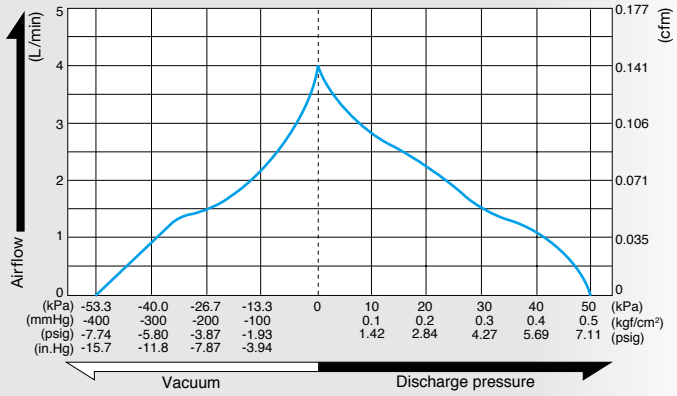

Current Characteristics

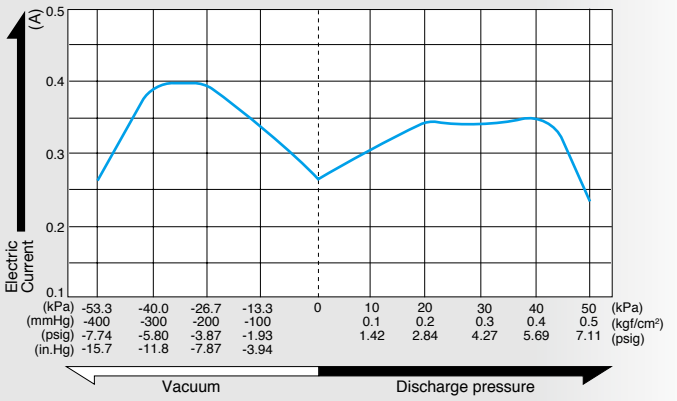

Specifications

Attainable Vacuum	-53.3 kPa (-400 mmHg) -533 mbar -15.7 in.Hg
Free Air Displacement	4.0 L/min 0.141 cfm
Rated Voltage	12 V DC
Maximum Pressure	50 kPa (0.5 kgf/cm^2) 0.5 bar 7.11 psig
Maximum Current	0.5 A
Duty Cycle	Continuous
Rated Performance (MTTF)	800 hours
Inlet	5 mm O.D. straight barb
Outlet	5 mm O.D. straight barb
Coil Insulation Class	Class E equivalent
Mounting Dimensions	52 (L) x 36 (W) mm 2 - 3/64" (L) x 1 - 27/64" (W)
Weight	0.19 kg 0.42 Lbs

Application Examples

Vacuum Sucking Pen

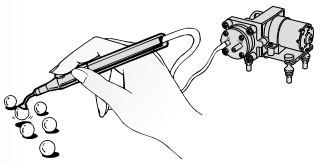

Blood Pressure Tester

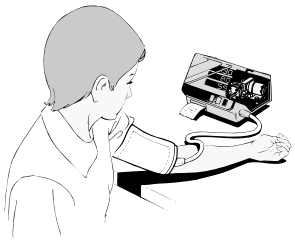

External Dimensions (Unit: mm)

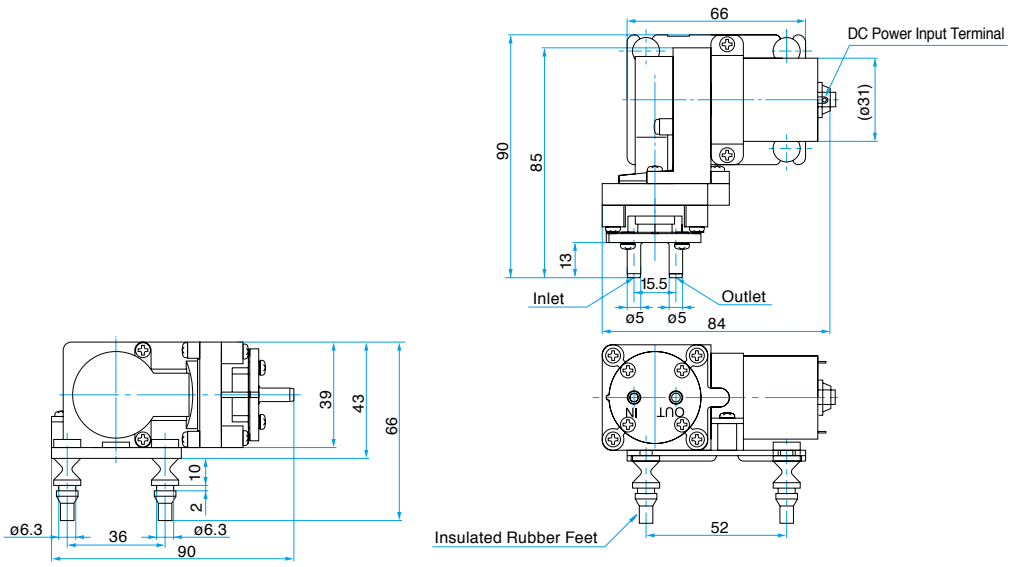

Compressor and Vacuum Pump

Model DP0102

CE 12 V | UK CA 12 V

Brushless DC Motor 12 V DC

Airflow & Power Consumption

Airflow Characteristics

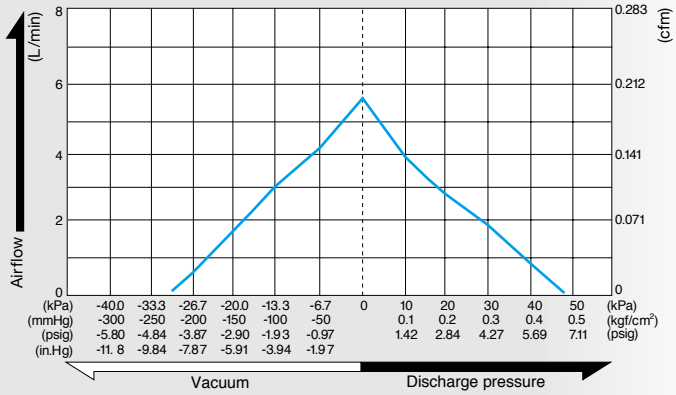

Current Characteristics

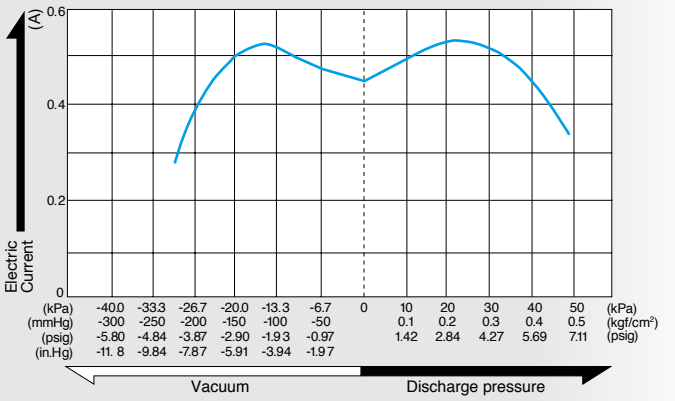

Specifications

Attainable Vacuum	-26.7 kPa (-200 mmHg) -267 mbar -7.87 in.Hg
Free Air Displacement	5.0 L/min 0.177 cfm
Rated Voltage	12 V DC
Maximum Pressure	45 kPa (0.45 kgf/cm²) 0.45 bar 6.4 psig
Maximum Current	0.7 A
Duty Cycle	Continuous
Working Pressure Range	-26.7 kPa to 45 kPa (-200 mmHg to 0.45 kgf/cm²) -267 mbar to 0.45 bar -7.87 in.Hg to 6.4 psig
Rated Performance (MTTF)	10,000 hours
Inlet	6 mm O.D. straight barb
Outlet	6 mm O.D. straight barb
Coil Insulation Class	Class E equivalent
Mounting Dimensions	50 (L) x 30 (W) mm 1 - 31/32" (L) x 1 - 3/16" (W)
Weight	0.25 kg 0.55 Lbs
Leadwire Length	400 mm 15 - 3/4"

Application Examples

Endoscopes

Removal of micromachining chips

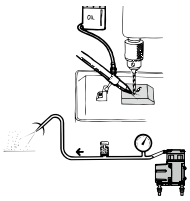

External Dimensions (Unit: mm)

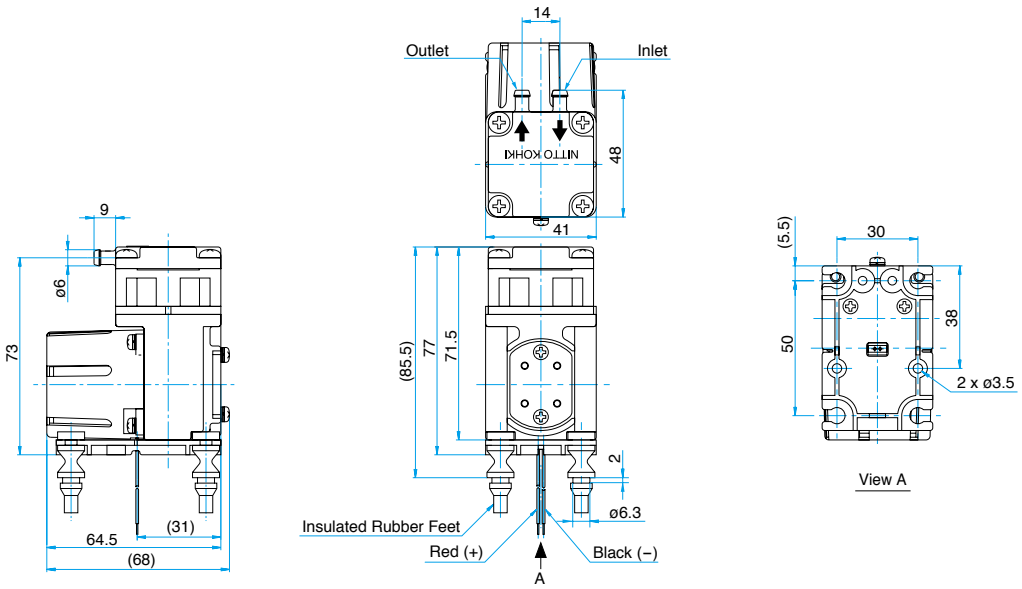

Compressor and Vacuum Pump

Model DP0102S

CE 24 V | UK CA 24 V

Brushless DC Motor 24 V DC

Airflow & Power Consumption

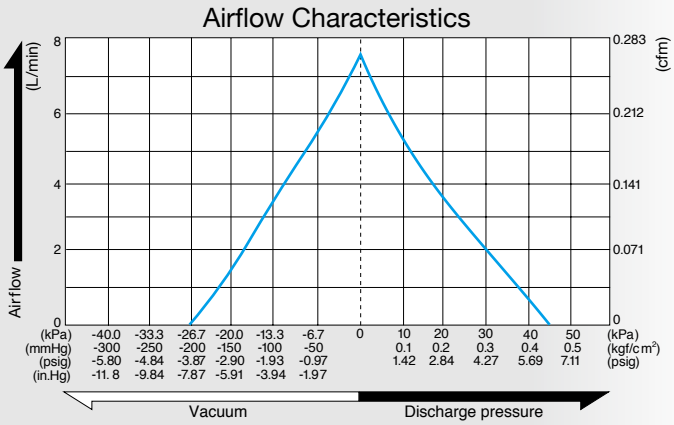

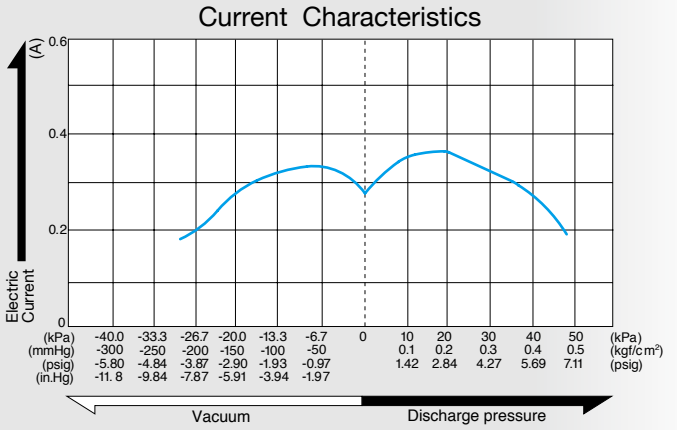

Specifications

Attainable Vacuum	-26.7 kPa (-200 mmHg) -267 mbar -7.87 in.Hg
Free Air Displacement	7.0 L/min 0.247 cfm
Rated Voltage	24 V DC
Maximum Pressure	45 kPa (0.45 kgf/cm²) 0.45 bar 6.4 psig
Maximum Current	0.5 A
Duty Cycle	Continuous
Working Pressure Range	-26.7 kPa to 45 kPa (-200 mmHg to 0.45 kgf/cm²) -267 mbar to 0.45 bar -7.87 in.Hg to 6.4 psig
Rated Performance (MTTF)	10,000 hours
Inlet	6 mm O.D. straight barb
Outlet	6 mm O.D. straight barb
Coil Insulation Class	Class E equivalent
Mounting Dimensions	50 (L) x 30 (W) mm 1 - 31/32" (L) x 1 - 3/16" (W)
Weight	0.25 kg 0.55 Lbs
Leadwire Length	400 mm 15 - 3/4"

Application Examples

Endoscopes

Removal of micromachining chips

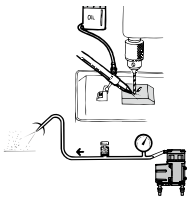

External Dimensions (Unit: mm)

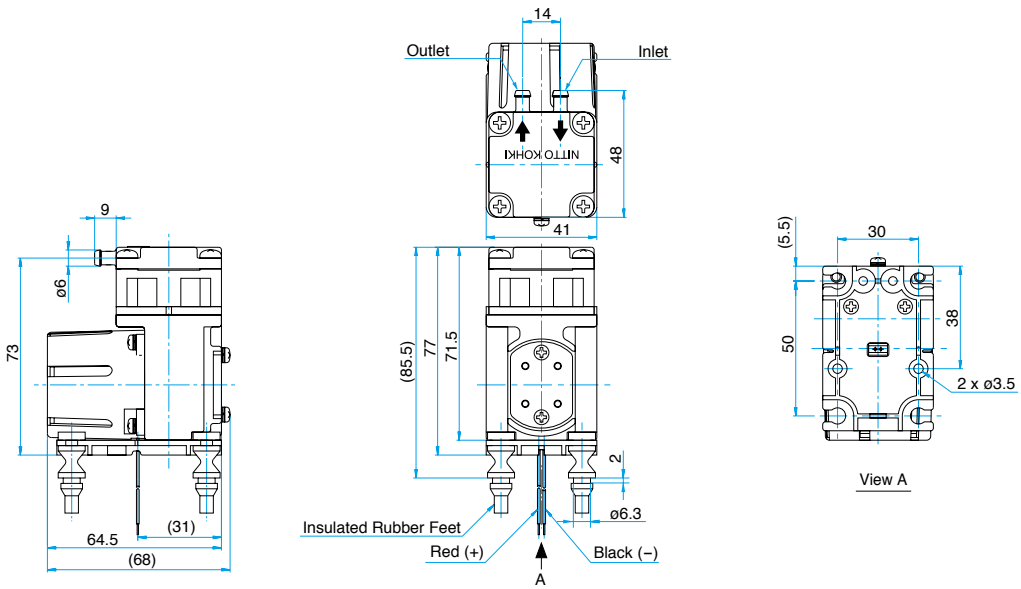

Compressor and Vacuum Pump

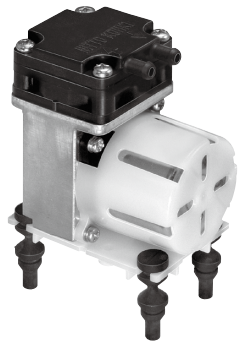

Model DP0102H-X1

CE 12 V | UKCA 12 V

Brushless DC Motor **12 V DC**

Airflow & Power Consumption

Airflow Characteristics

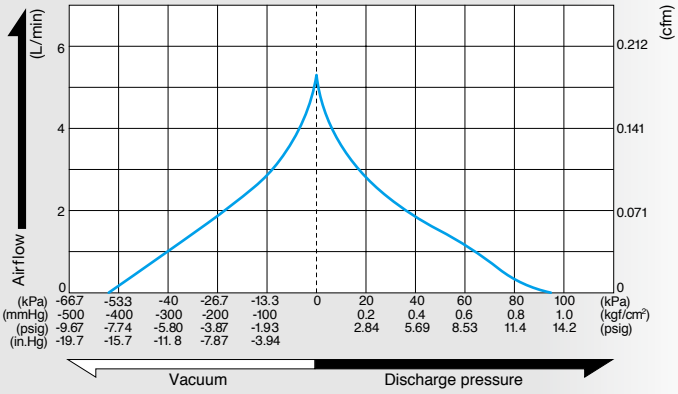

Current Characteristics

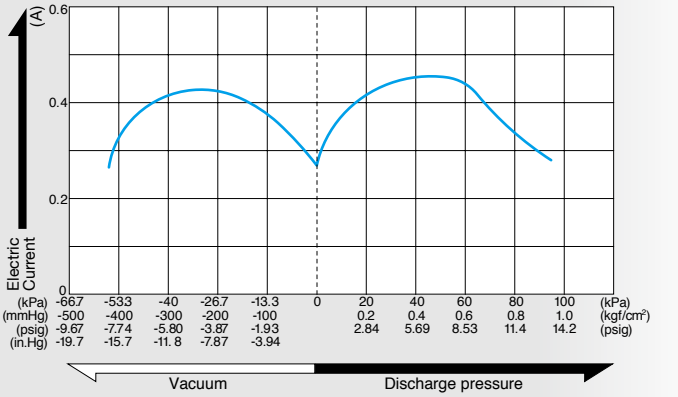

Specifications

Attainable Vacuum	-50.7 kPa (-380 mmHg) -507 mbar -15 in.Hg
Free Air Displacement	4.0 L/min 0.141 cfm
Rated Voltage	12 V DC
Maximum Pressure	80 kPa (0.8 kgf/cm²) 0.8 bar 11.4 psig
Maximum Current	0.7 A
Duty Cycle	Continuous
Working Pressure Range	-50.7 kPa to 80 kPa (-380 mmHg to 0.8 kgf/cm²) -507 mbar to 0.8 bar -15 in.Hg to 11.4 psig
Rated Performance (MTTF)	8,000 hours
Inlet	6 mm O.D. straight barb
Outlet	6 mm O.D. straight barb
Coil Insulation Class	Class E equivalent
Mounting Dimensions	50 (L) x 30 (W) mm 1 - 31/32" (L) x 1 - 3/16" (W)
Weight	0.25 kg 0.55 Lbs
Leadwire Length	400 mm 15 - 3/4"

Application Examples

Vacuum pick up and place devices for CD & DVD

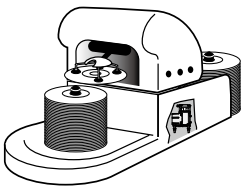

Removal of micromachining chips

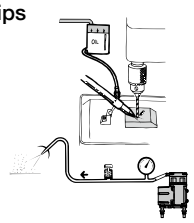

External Dimensions (Unit: mm)

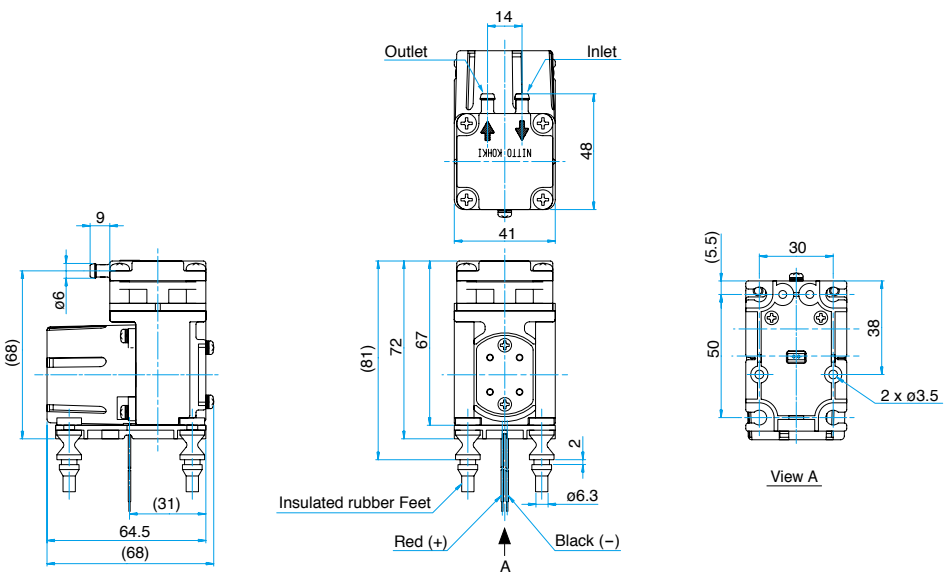

Compressor

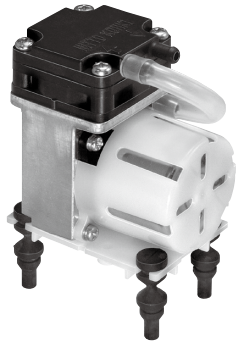

Model DP0102H-X2

Brushless DC Motor 12 V DC

CE 12 V UKCA 12 V

Airflow & Power Consumption

Airflow Characteristics

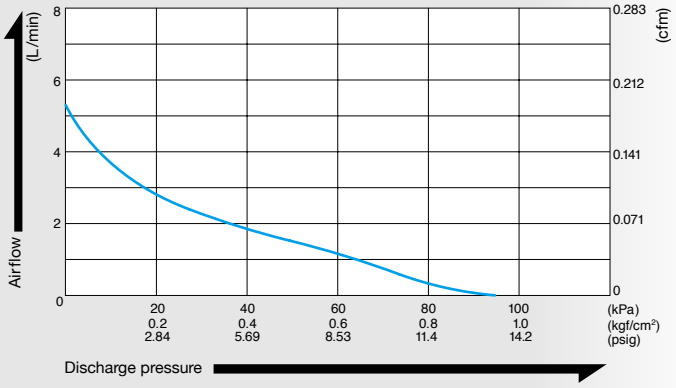

Current Characteristics

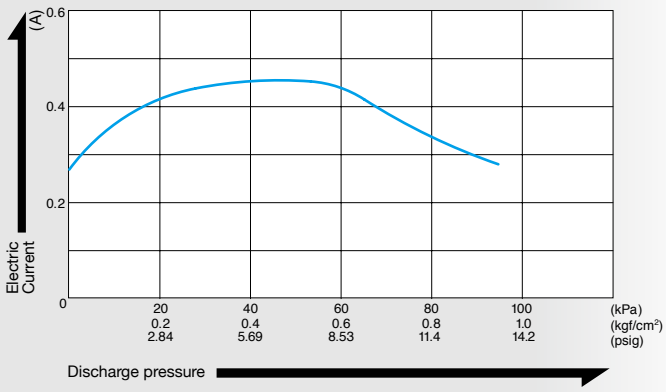

Specifications

Free Air Displacement	4.0 L/min 0.141 cfm
Rated Voltage	12 V DC
Maximum Pressure	80 kPa (0.8 kgf/cm²) 0.8 bar 11.4 psig
Maximum Current	0.7 A
Duty Cycle	Continuous
Working Pressure Range	0 to 80 kPa (0 to 0.8 kgf/cm²) 0 to 0.8 bar 0 to 11.4 psig
Rated Performance (MTTF)	8,000 hours
Inlet	6 mm O.D. straight barb
Outlet	6 mm O.D. straight barb
Coil Insulation Class	Class E equivalent
Mounting Dimensions	50 (L) x 30 (W) mm 1 - 31/32" (L) x 1 - 3/16" (W)
Weight	0.25 kg 0.55 Lbs
Leadwire Length	400 mm 15 - 3/4"

Application Examples

Removal of micromachining chips

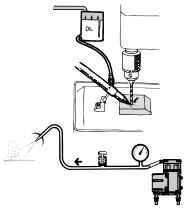

External Dimensions (Unit: mm)

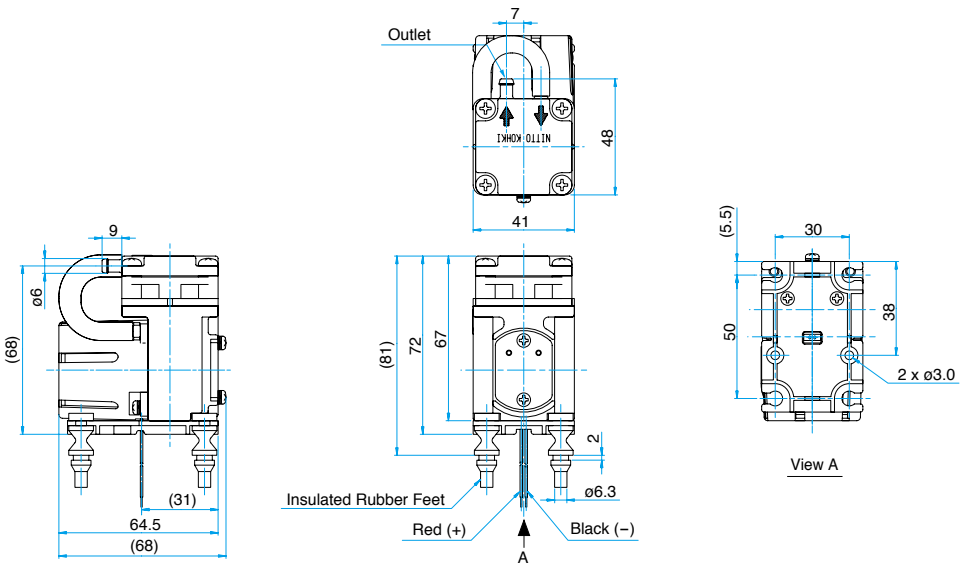

Compressor and Vacuum Pump

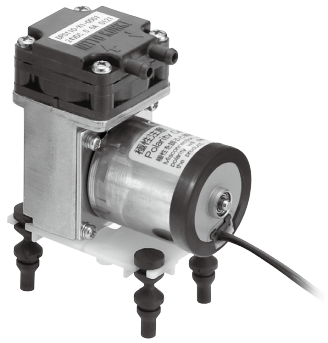

Model DP0110-X1

CE 12 V | UKCA 12 V

Brushless DC Motor **12 V DC**

Airflow & Power Consumption

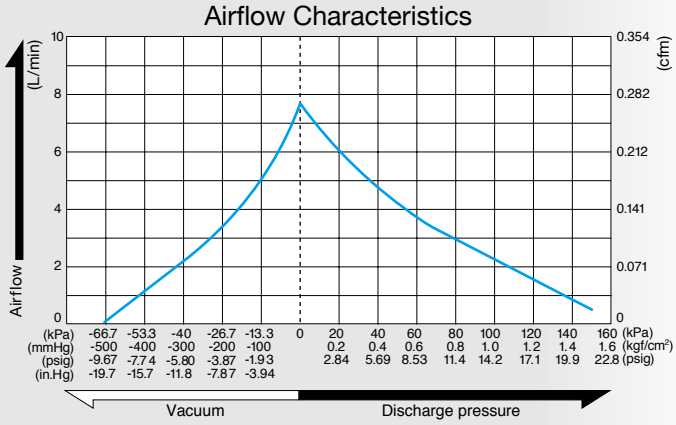

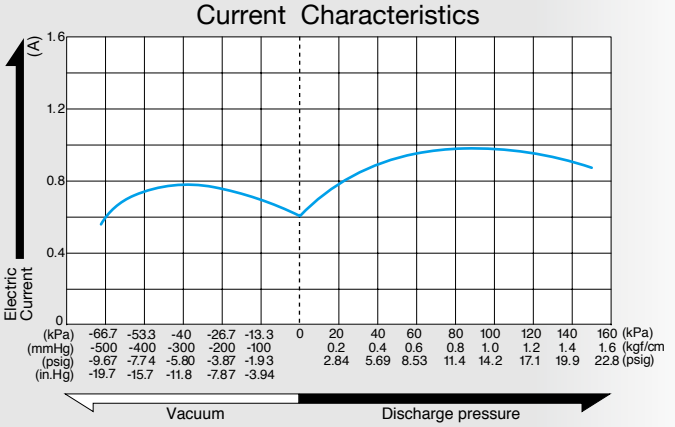

Specifications

Attainable Vacuum	-66.7 kPa (-500 mmHg) -667 mbar -19.7 in.Hg
Free Air Displacement	7.5 L/min 0.265 cfm
Rated Voltage	12 V DC
Maximum Pressure	150 kPa (1.5 kgf/cm²) 1.5 bar 21.3 psig
Maximum Current	1.2 A or less
Duty Cycle	Continuous
Rated Performance (MTTF)	8,000 hours
Inlet	6 mm O.D. straight barb
Outlet	6 mm O.D. straight barb
Coil Insulation Class	Class A equivalent
Mounting Dimensions	50 (L) x 30 (W) mm 1 - 31/32" (L) x 1 - 3/16" (W)
Weight	0.30 kg 0.66 Lbs
Leadwire Length	360 mm 14 - 11/64"

Application Examples

Vacuum pick up and place devices for CD & DVD

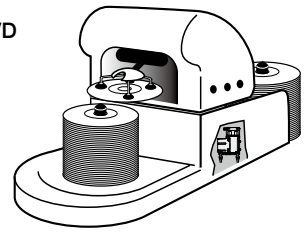

External Dimensions (Unit: mm)

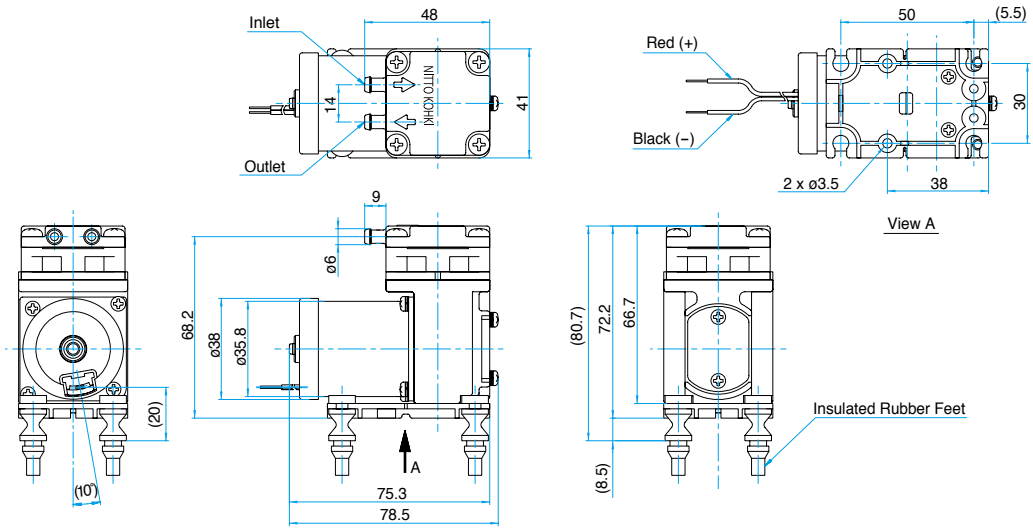

Compressor and Vacuum Pump

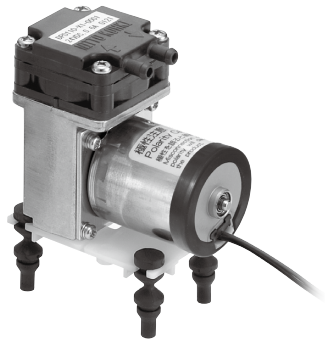

Model DP0110-Y1

CE 24 V | UK CA 24 V

Brushless DC Motor **24 V DC**

Airflow & Power Consumption

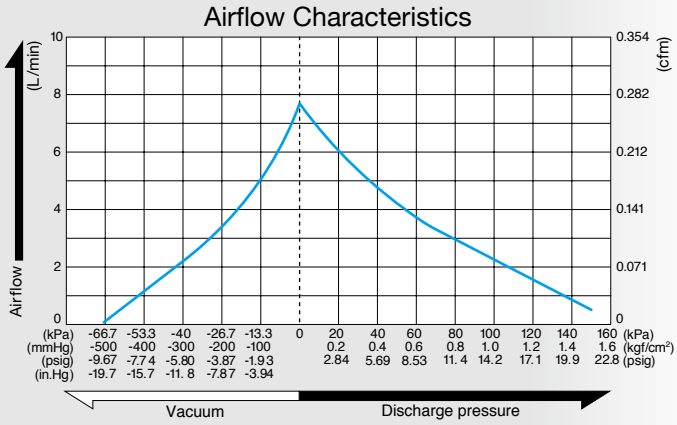

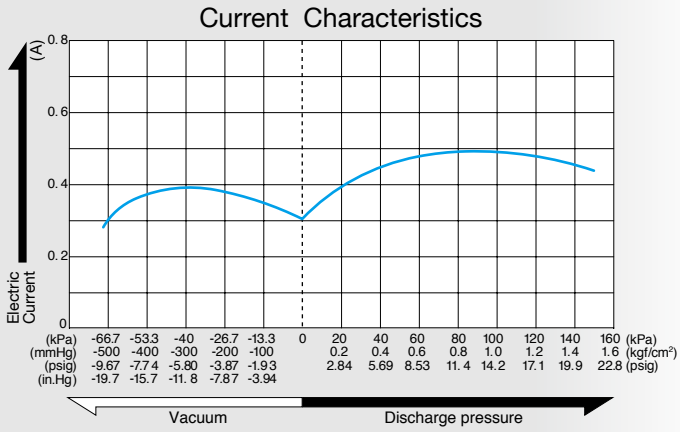

Specifications

Attainable Vacuum	-66.7 kPa (-500 mmHg) -667 mbar -19.7 in.Hg
Free Air Displacement	7.5 L/min 0.265 cfm
Rated Voltage	24 V DC
Maximum Pressure	150 kPa (1.5 kgf/cm²) 1.5 bar 21.3 psig
Maximum Current	0.6 A or less
Duty Cycle	Continuous
Rated Performance (MTTF)	8,000 hours
Inlet	6 mm O.D. straight barb
Outlet	6 mm O.D. straight barb
Coil Insulation Class	Class A equivalent
Mounting Dimensions	50 (L) x 30 (W) mm 1 - 31/32" (L) x 1 - 3/16" (W)
Weight	0.30 kg 0.66 Lbs
Leadwire Length	360 mm 14 - 11/64"

Application Examples

Vacuum pick up and place devices for CD & DVD

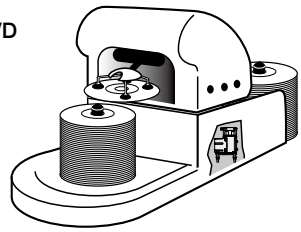

External Dimensions (Unit: mm)

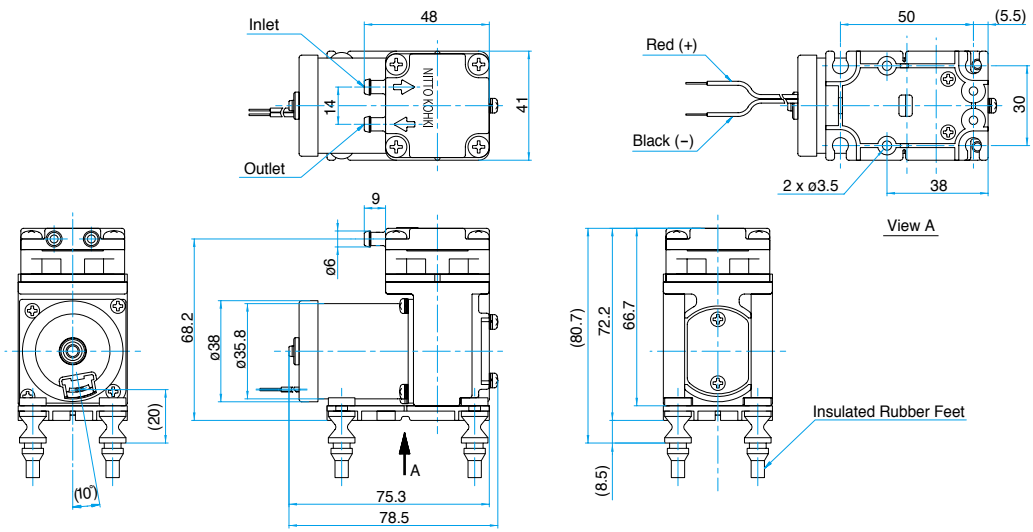

Compressor and Vacuum Pump

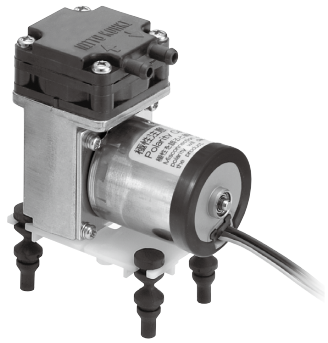

Model DP0110-X3

PWM controlled model

Brushless DC Motor 12 V DC

CE 12 V UKCA 12 V

Airflow & Power Consumption

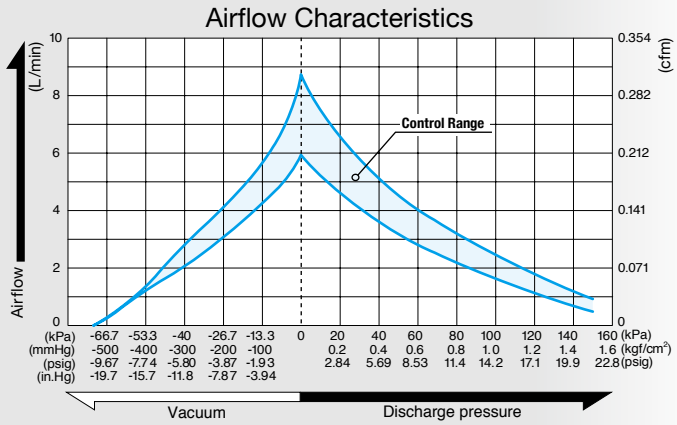

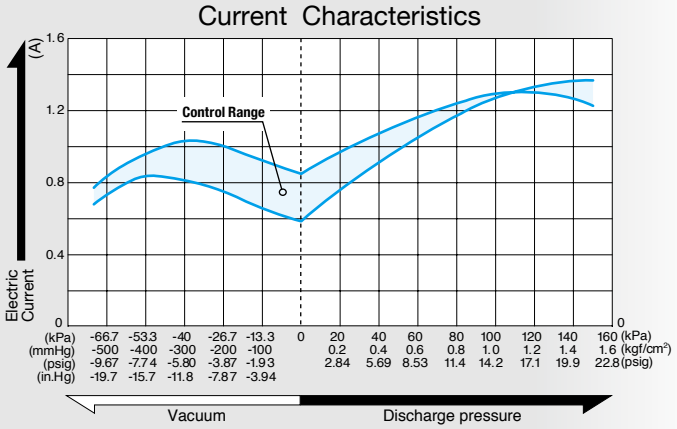

Specifications

Attainable Vacuum	-66.7 kPa (-500 mmHg) -667 mbar -19.7 in.Hg
Free Air Displacement	7.5 L/min 0.265 cfm
Rated Voltage	12 V DC
Maximum Pressure	150 kPa (1.5 kgf/cm²) 1.5 bar 21.3 psig
Maximum Current	1.4 A or less
Duty Cycle	Continuous
Rated Performance (MTTF)	8,000 hours
Control(PWM)	2.5 - 5 V, 15 - 25 kHz, Duty cycle 80 - 100%
Inlet	6 mm O.D. straight barb
Outlet	6 mm O.D. straight barb
Coil Insulation Class	Class A equivalent
Mounting Dimensions	50 (L) x 30 (W) mm 1 - 31/32" (L) x 1 - 3/16" (W)
Weight	0.30 kg 0.66 Lbs
Leadwire Length	180 mm 7 - 3/32"

Application Examples

Vacuum pick up and place devices for CD & DVD

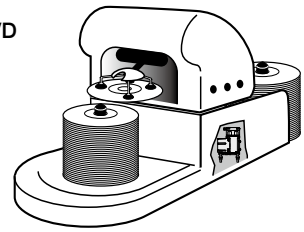

External Dimensions (Unit: mm)

Mounting Dimension of Rubber Foot:
Plate thickness : t = 2 mm,
Hole diameter : ø6±0.1 mm
(Rubber feet come with the product as accessories.)

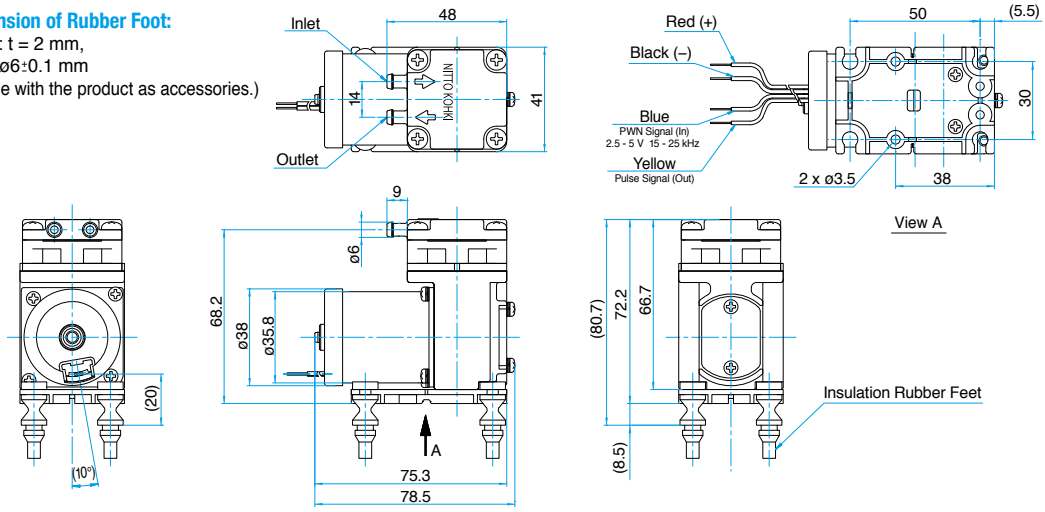

Compressor and Vacuum Pump

Model DP0110T-X1

Brushless DC Motor **12 V DC**

CE 12 V | UK CA 12 V

Airflow & Power Consumption

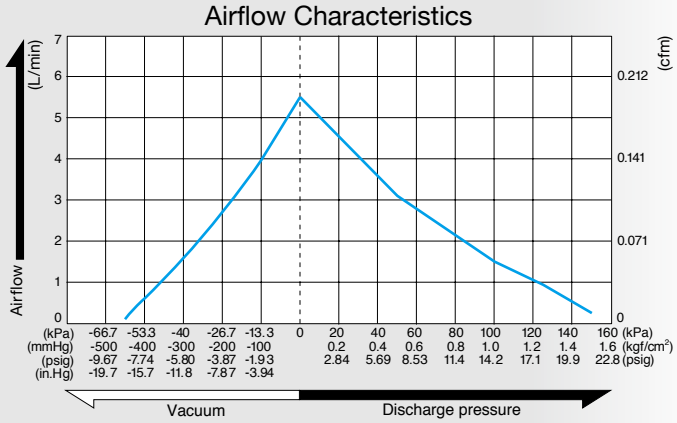

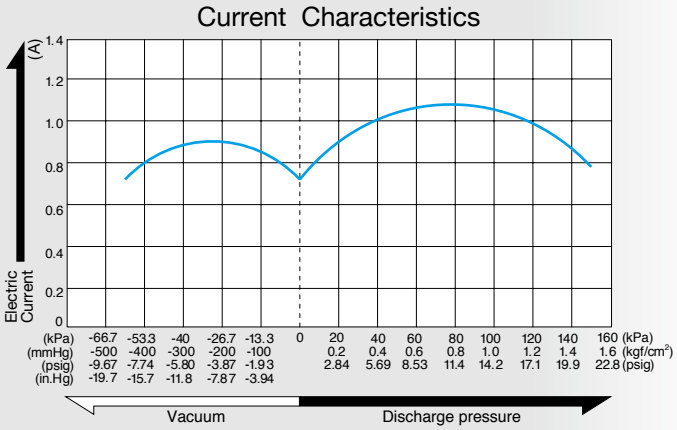

Specifications

Attainable Vacuum	-60.0 kPa (-450 mmHg) -600 mbar -17.7 in.Hg
Free Air Displacement	5.5 L/min 0.194 cfm
Rated Voltage	12 V DC
Maximum Pressure	150 kPa (1.5 kgf/cm²) 1.5 bar 21.3 psig
Maximum Current	1.2 A
Duty Cycle	Continuous
Rated Performance (MTTF)	5,000 hours
Inlet	6.8 mm O.D. straight barb
Outlet	6.8 mm O.D. straight barb
Coil Insulation Class	Class A equivalent
Mounting Dimensions	36.5 (L) x 37.5 (W) mm 1 - 7/16" (L) x 1 - 15/32" (W)
Weight	0.27 kg 0.60 Lbs
Leadwire Length	360 mm 14 - 11/64"

Application Examples

Vending Machines

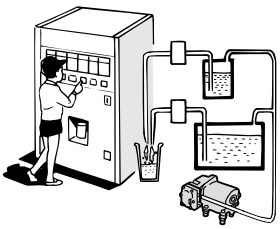

External Dimensions (Unit: mm)

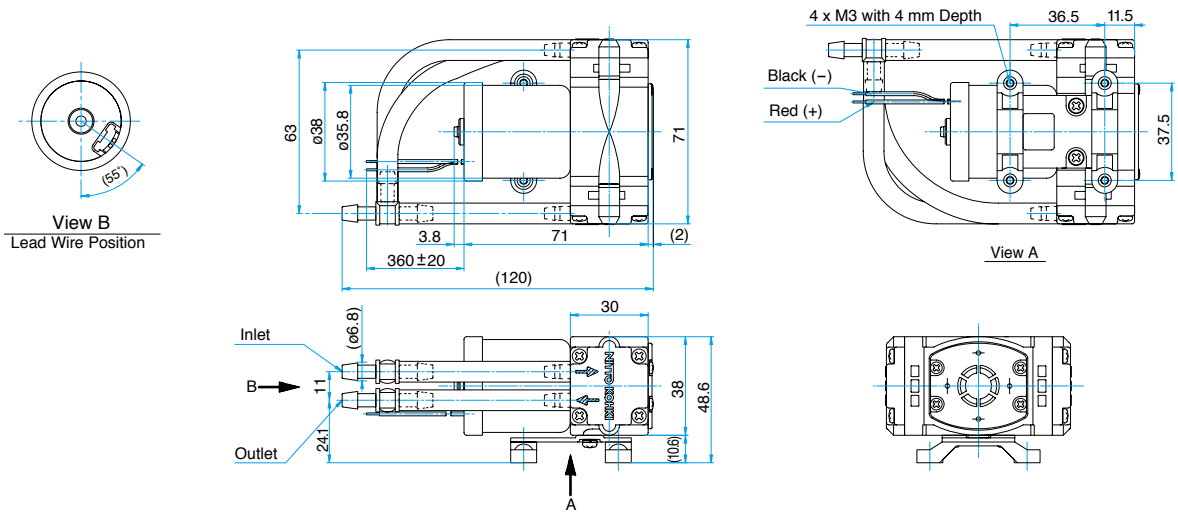

Compressor and Vacuum Pump

Model DP0110T-Y1

Brushless DC Motor 24 V DC

CE 24 V UKCA 24 V

Airflow & Power Consumption

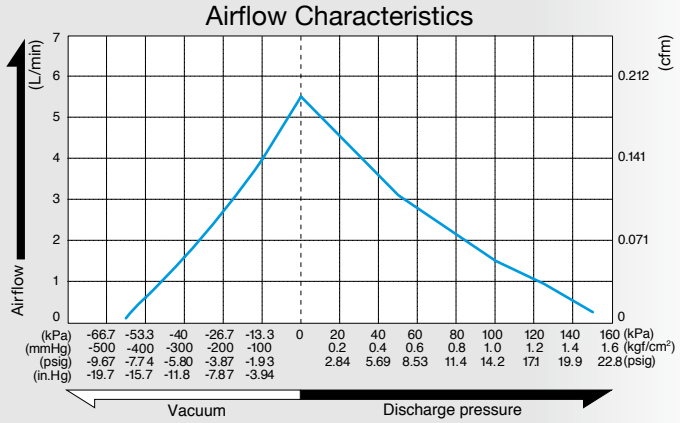

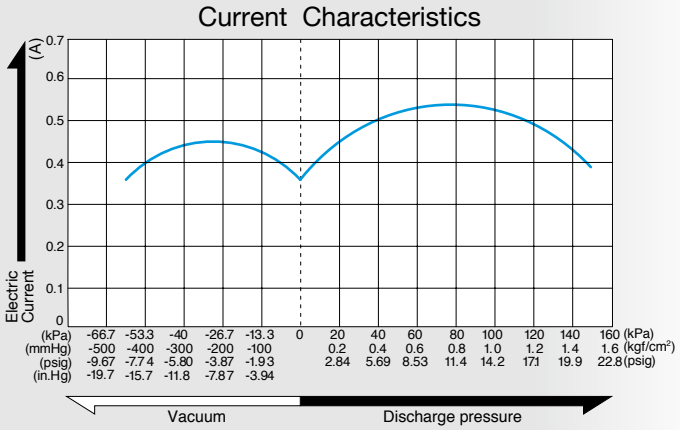

Specifications

Attainable Vacuum	-60.0 kPa (-450 mmHg) -600 mbar -17.7 in.Hg
Free Air Displacement	5.5 L/min 0.194 cfm
Rated Voltage	24 V DC
Maximum Pressure	150 kPa (1.5 kgf/cm²) 1.5 bar 21.3 psig
Maximum Current	0.6 A
Duty Cycle	Continuous
Rated Performance (MTTF)	5,000 hours
Inlet	6.8 mm O.D. straight barb
Outlet	6.8 mm O.D. straight barb
Coil Insulation Class	Class A equivalent
Mounting Dimensions	36.5 (L) x 37.5 (W) mm 1 - 7/16" (L) x 1 - 15/32" (W)
Weight	0.27 kg 0.60 Lbs
Leadwire Length	360 mm 14 - 11/64"

Application Examples

Vending Machines

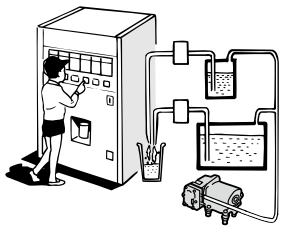

External Dimensions (Unit: mm)

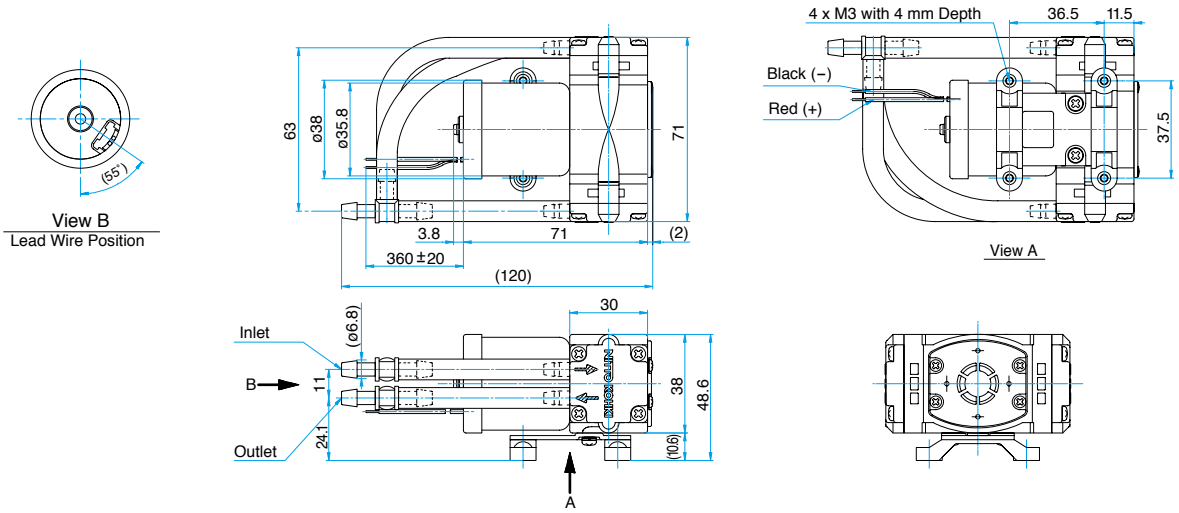

Compressor and Vacuum Pump

Model DP0210TA-Y1

PWM controllable

Brushless DC Motor 24 V DC

CE 24 V UKCA 24 V

Airflow & Power Consumption

Airflow Characteristics

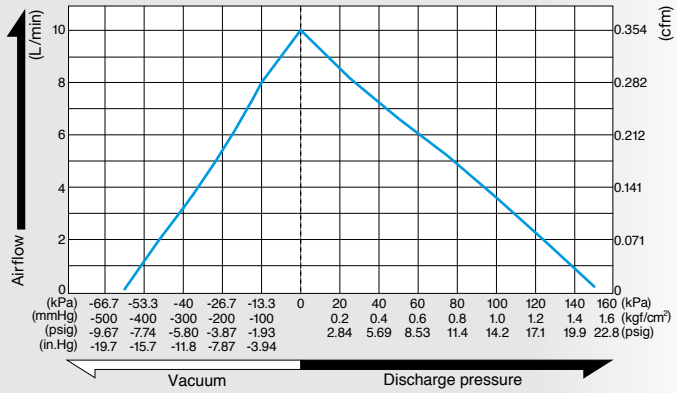

Current Characteristics

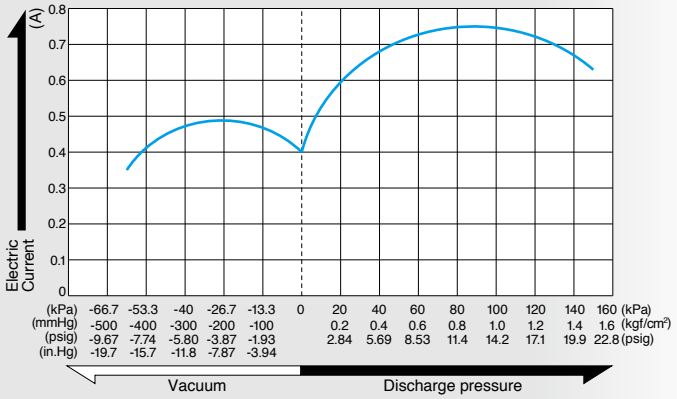

Specifications

Attainable Vacuum	-60.0 kPa (-450 mmHg) -600 mbar -17.7 in.Hg
Free Air Displacement	10 L/min 0.35 cfm
Rated Voltage	24 V DC
Maximum Pressure	150 kPa (1.5 kgf/cm²) 1.5 bar 21.3 psig
Maximum Current	0.8 A
Duty Cycle	Continuous
Rated Performance (MTTF)	5,000 hours
Inlet	6.8 mm O.D. straight barb
Outlet	6.8 mm O.D. straight barb
Coil Insulation Class	Class B equivalent
Mounting Dimensions	36.5 (L) x 37.5 (W) mm 1 - 7/16" (L) x 1 - 15/32" (W)
Weight	0.32 kg 0.71 Lbs
Leadwire Length	300 mm 11 - 13/16"

Application Examples

Vending Machines

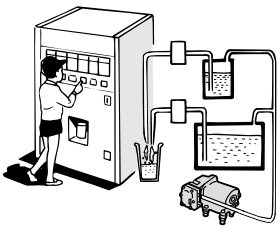

External Dimensions (Unit: mm)

Connection Table

Circuit No.	1	2	3	4	5	6	7	8
Cord Color	—	Yellow	—	—	White	Blue	Black	Red
Connection Table	Control Signal						Power Source	
Function	—	FG	—	—	PWM	BRAKE	GND	VM
Cord Size	AWG28						AWG26	
Cord UL Style	UL1571							

No control function

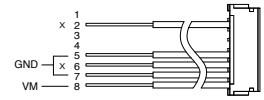

Use control function

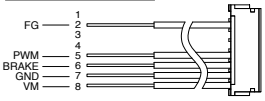

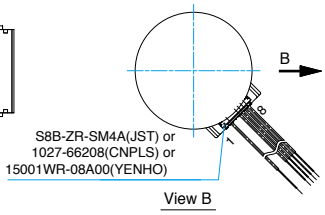

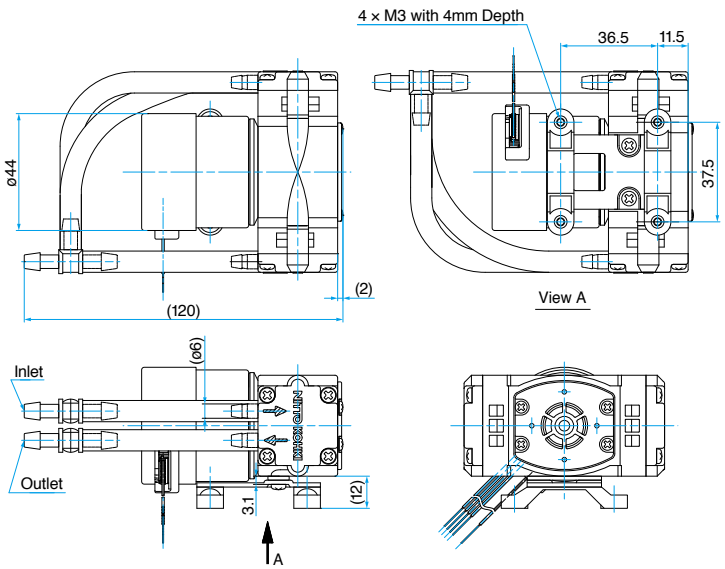

LIQUID PUMP

Piezoelectric Pump

BIMOR series

Page

BPS Type
BPH Type
BPHS Type — 87
BPF Type

Made to order model — 110

DC Diaphragm Liquid Pump

DPE series

DPE-100
DPE-400
DPE-400BL — 89
DPE-800

DPE-100BLC
DPE-200BLC — 91

Liquid Pump series

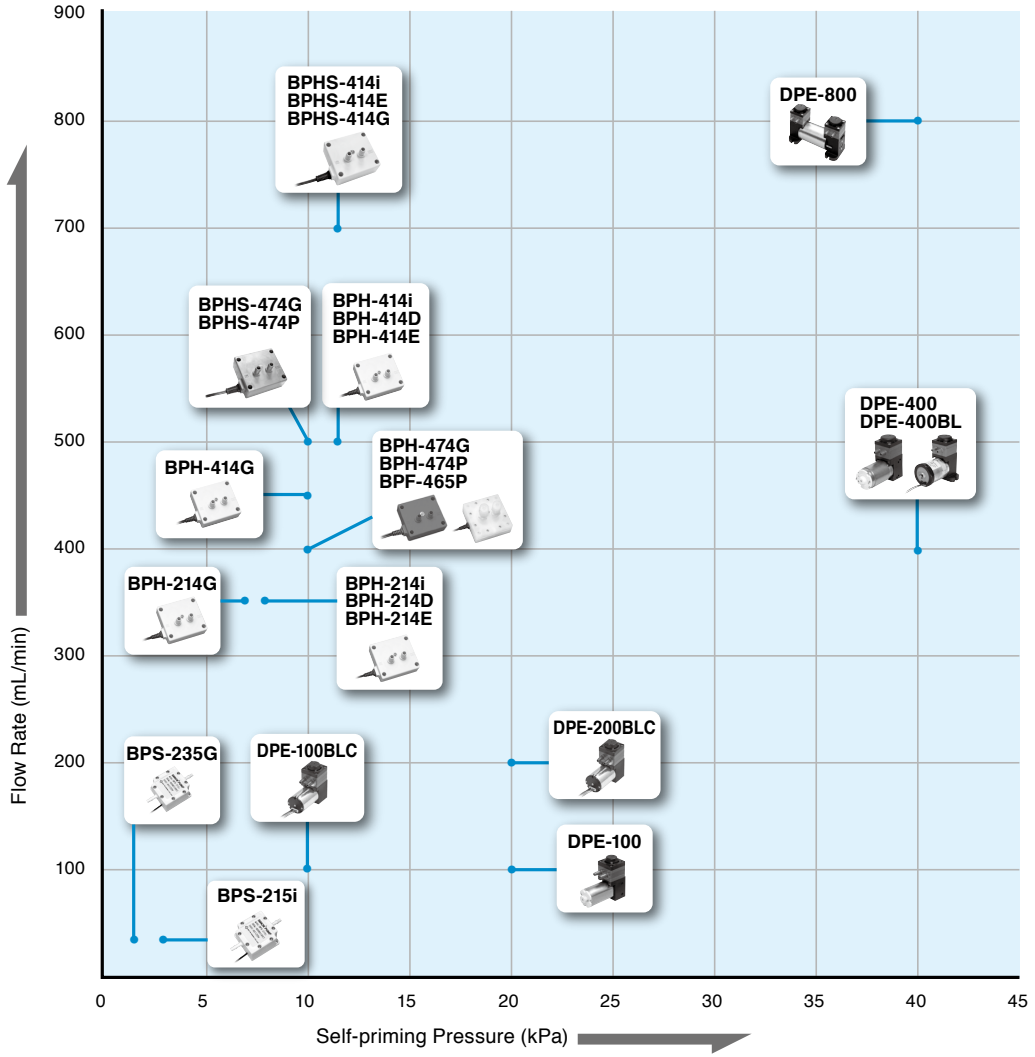

i : Butyl Rubber
G : Fluorine Rubber
D : Dimethyl rubber
E : Ethylene Propylene Rubber
P : Perfluor

Piezoelectric Pump

BIMOR PUMP

120 V/240 V 120 V/240 V

Suitable for pumping liquids

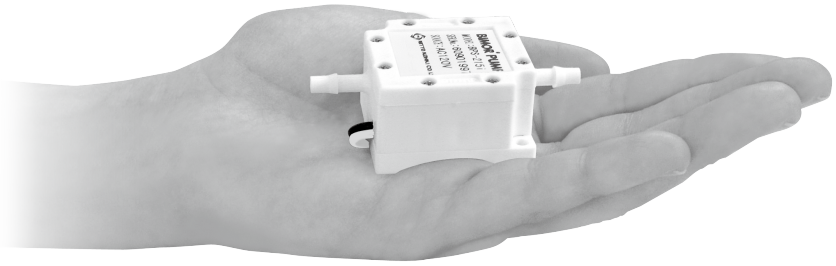

Applications

- **For water supply and drainage**
- **For cooling water circulation**
- **For chemical injection**
- **For liquid sampling**

Compact, lightweight, durable & quiet

As BIMOR PUMP has no motors or shafts or other troublesome mechanisms, we have achieved maintenance free continuous operation for 60 months.

Low power consumption & electromagnetic noise

BIMOR PUMP is driven by low energy consuming piezoelectric elements. Consequently it costs very little to run and emits virtually no electromagnetic noise.

Simple flow rate adjustment

As the flow rate of BIMOR PUMP is proportional to the voltage and frequency, adjusting the flow rate is as simple as adjusting either one. You may use the product at the rated voltage or lower.

Application versatility

The parts can be made of several different materials, so you can select the material appropriate to your needs, be it a liquid application. BIMOR PUMP is currently employed in a variety of different fields including medicine, scientific research, and the PC and chemical industries.

Principle / Structure

BIMOR PUMP uses the displacement operation of the piezoelectric bimorph vibrator as the direct source of the pumping action.

Driving Power : Piezoelectric Bimorph Bending

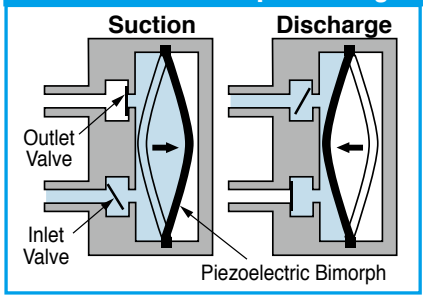

External Dimensions (Unit: mm)

BPS type

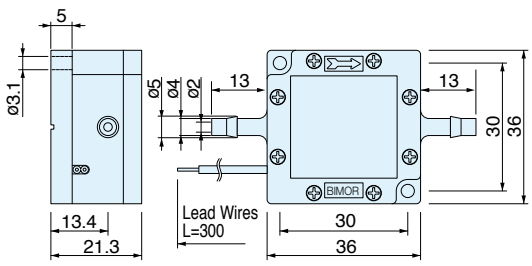

BPHS type

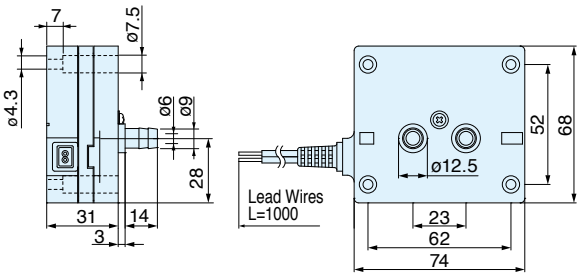

BPH type

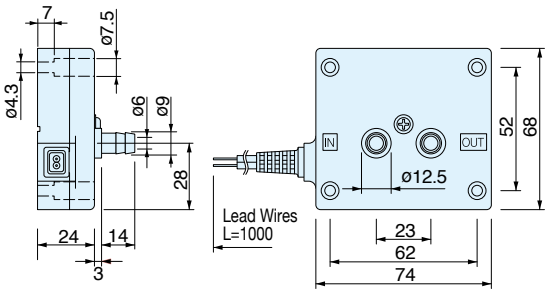

BPF type

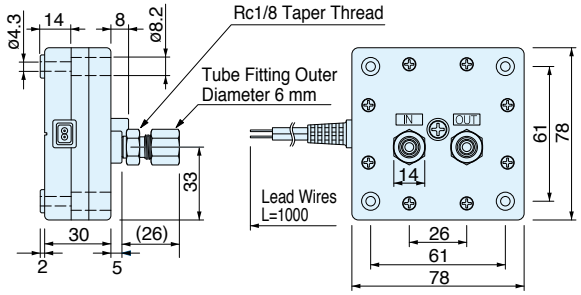

Specifications

Voltage(AC) —120 V *1					Voltage(AC) —240 V *1					Material of Wetted Parts			Weight (g)
Model	Current (mA)	Self-priming Pressure (kPa)*2	Flow Rate (mL/min)*2	Discharge Pressure (kPa)	Model	Current (mA)	Self-priming Pressure (kPa)*2	Flow Rate (mL/min)*2	Discharge Pressure (kPa)	Housing	Liquid Contact Sheet	Valve / O-ring	
BPS-215i	3	3	30	15	—	—	—	—	—	PP	PP	IIR	40
BPH-214E	15	8	350	18	BPH-214E	7.5	8	350	18	PP	PP	EPDM	140
BPH-214G	15	7	350	17	BPH-214G	7.5	7	350	17	PP	PTFE	FKM	140
BPH-414E	30	12	500	35	—	—	—	—	—	PP	PP	EPDM	140
—	—	—	—	—	BPH-474G	15	10	400	35	PPS	PTFE	FKM	170
—	—	—	—	—	BPH-474P	15	10	400	35	PPS	PTFE	FFKM/FEP	170

*1: The above performance is obtained by using 25°C water at AC frequency 60 Hz. When the pump is used at AC frequency 50 Hz, the flow rate will decrease approximately 20%.
*2: When the liquid temperature is low, the check valve will harden. As a result, the flow rate and the self-priming pressure will decrease. Especially the flow rate of the pump with fluorine rubber will decrease by half at 5°C, so select with sufficient margin. Since the flow rate will decrease with highly viscous liquids, please check the flow rate with an actual pump before use.
*3: Please see page 110 for other made-to-order models.

Condition of Use

Ambient temperature	5 to 50°C *1
Ambient humidity	35 to 85% *2
Fluid temperature	5 to 50°C

*1: No Freezing
*2: No condensation

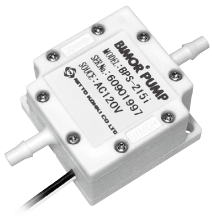

BPS Type

BPH Type

The meaning of each letter in the model name

BP H - 4 1 4 D

Pump type
S : Small type
H : Dismantlable type
F : Chemical-resistant type
HS : High flow type

Diaphragm type
2: Single
4: Double

Housing material
1: Polypropylene (PP)
2: Polyacetal (POM)
6: Fluororesin (Perfluoroalkoxy) (PFA)
7: Polyphenylene Sulfide (PPS)

Pump type
4: Dismantlable type
5: Chemical-resistant type and small type

Rubber material (Valve, O-ring)
i : Butyl Rubber (IIR)
D : Dimethyl Silicon Rubber (VMQ)
E : Ethylene Propylene Rubber (EPDM)
G : Fluorine Rubber (FKM)
P : Perfluoroelastomer (FFKM)

Material Description

EPDM
Ethylene Propylene Rubber
FEP
Fluoroethylene Propylene
FFKM
Perfluoroelastomer
FKM
Fluorine Rubber
IIR
Butyl Rubber
PP
Polypropylene
PPS
Polyphenylene Sulfide
PTFE
Tetrafluororesin
(Polytetrafluoroethylene)

Suitable/unsuitable chemical liquids

Model	Examples of suitable chemical liquids	Examples of unsuitable chemical liquids
BPS-215i	Ethanol, Dilute hydrochloric acid, Sodium carbonate, Benzaldehyde, Formalin	Xylene, Mineral oil, Carbon tetrachloride, Trichloroethylene, Toluene, Benzene
BPH-214E BPH-414E	Ammonia water, Ethanol, Dilute hydrochloric acid, Caustic potash, Caustic soda, Methanol	
BPH-214G	Ethanol, Hydrogen peroxide, Mineral oil, Sodium hypochlorite	Acetone, Ammonia water, Glacial acetic acid, Hydrofluoric acid, Formalin
BPH-474G	Ethanol, Xylene, Carbon tetrachloride, Silicone oil, Trichloroethylene	Acetone, Ammonia water, Chlorosulfonic acid, Glacial acetic acid, Hydrofluoric acid, Formalin
BPH-474P	Ethanol, Chloroform, Glacial acetic acid, Benzene, Methyl ethyl ketone	Chlorosulfonic acid, Fluorine oil, CFC 112, CFC 113

*This chart is for reference only. Please confirm under the operating conditions before use.

DC Liquid Pump

Model DPE-100 / DPE-400 / DPE-400BL / DPE-800

CE 12 V/24 V | UKCA 12 V/24 V

Brush DC Motor / Brushless DC Motor

12 V / 24 V DC

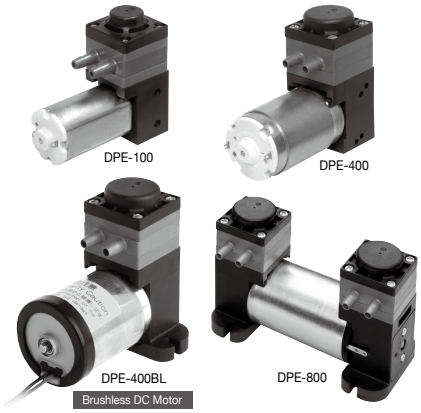

Flow & Electric Current

Flow Characteristics (Water at 25˚C)

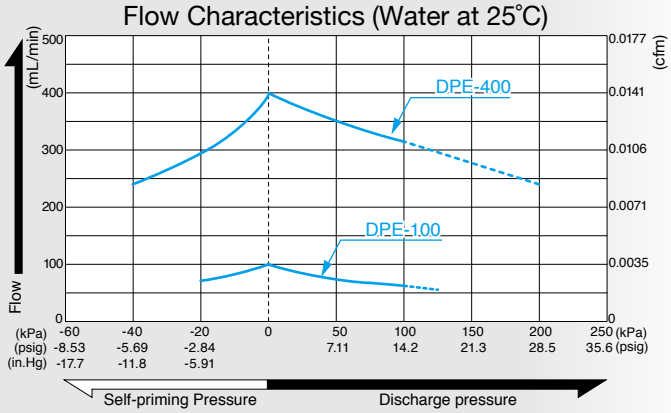

Flow Characteristics (Water at 25˚C)

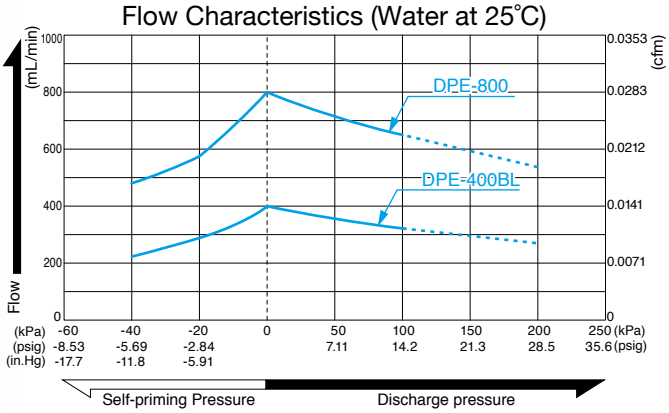

Current Characteristics

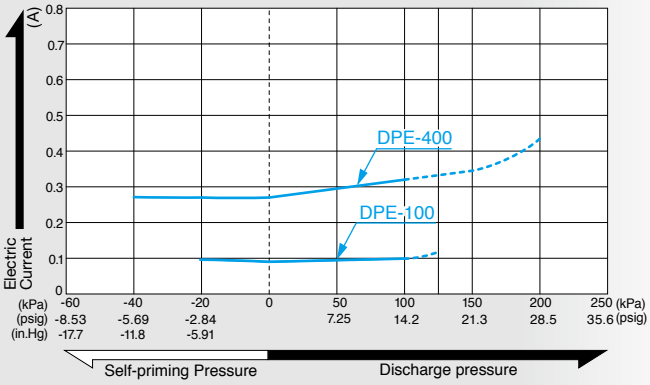

Current Characteristics

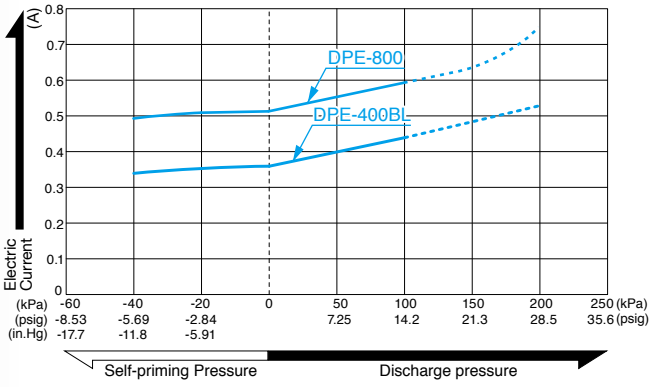

Specifications

Model	DPE-100	DPE-400	DPE-400BL-X1	DPE-400BL-Y1	DPE-800
Rated Voltage	24 V DC		12 V DC	24 V DC	
Flow Rate *1	100 mL/min 0.0035 cfm	400 mL/min 0.0141 cfm			800 mL/min 0.0283 cfm
Working Pressure Range	0 to 100 kPa (0 to 1 kgf/cm²) 0 to 1 bar 0 to 14.2 psig				
Maximum Pressure *2	300 kPa (3 kgf/cm²) 3 bar 42.7 psig				
Maximum Current	100 mA	345 mA	900 mA	450 mA	600 mA
Duty Cycle	Continuous				
Rated Performance (MTTF)	500 hours		6,000 hours		600 hours
Self-priming Pressure *1	20 kPa (150 mmHg) 0.2 bar 2.84 psig	40 kPa (300 mmHg) 0.4 bar 5.69 psig			
Inlet	4.7 mm O.D. straight barb	5.4 mm O.D. straight barb			
Outlet	4.7 mm O.D. straight barb	5.4 mm O.D. straight barb			
Insulation Classification	Class E equivalent	Class F equivalent	Class A equivalent		Class E equivalent
Mounting Dimensions	9.5 (L) x 17 (W) mm 3/8"(L) x 43/64"(W)	19 (L) x 26 (W) mm 3/4"(L) x 1 - 1/32"(W)	41 (W) mm 1 - 39/64 "(W)		74.5 (L) x 41 (W) mm 2 - 15/16"(L) x 1 - 39/64"(W)
Weight	67 g 0.148 Lbs	187 g 0.412 Lbs	230 g 0.507 Lbs		350 g 0.771 Lbs
Motor	Brush DC Motor		Brushless DC Motor		Brush DC Motor

*1. When the check valve is hardened due to low liquid temperature,self-priming performance and flow rate will go down.
*2. Restarting pumps with flow passage closed is impossible.
*3. Tubing between two pumping heads must be done in parallel. Tubing in series between the two pumping heads should not be made.
This may cause extreme pressure hike that will result in broken parts, liquid splash out or possible ignition. (DPE-800)

Condition of Use

Operating Ambient Temperature	5 to 40°C
Operating Ambient Humidity	30 to 85%
Operating Fluid Temperature	5 to 50°C

Application Examples

- Liquid analytical instruments e.g. medical, food, water treatment & environmental.
- Liquid transport within filtration, sampling, sterilizers and washers.
- Ink transport within industrial ink-jet printers.

Pulse Absorption Mechanism

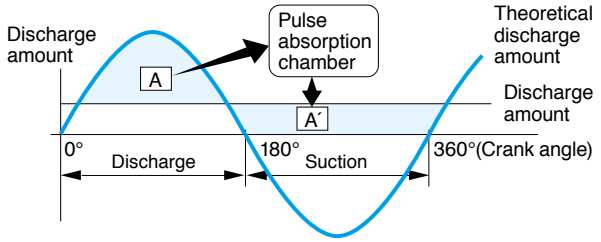

- The cause of pulsation (A) is taken into the pulse absorption chamber and discharged at the time of suction (A') to reduce pulse.
- Pulsation: Vibration due to change in pressure and flow rate

Material of wetted parts and applicable fluids

Model	Material of wetted parts					Example of suitable chemical liquid*	Example of unsuitable chemical liquid
	Cylinder Head	Head Cover	Diaphragm	Valve	O-ring		
DPE-100-2E DPE-400-2E DPE-400BL-2E DPE-800-2E	PA Polyamide(Nylon)		PTFE Polytetrafluoroethylene	EPDM Ethylene-propylene rubber		Caustic soda, Citric acid Ammonia water, Caustic potash, Ethanol	Mineral oil, Trichloroethylene, Benxaldehyde, Carbon tetrachloride, Toluene
DPE-100-2G DPE-400-2G DPE-400BL-2G DPE-800-2G				FKM Fluoro rubber		Ethanol, Ethylene glycol Sodium carbonate, mineral oil	Chlorosulfonic acid, Folmalin, Glacial acetic acid, Methyl ethyl ketone
DPE-100-7G DPE-400-7G DPE-400BL-7G DPE-800-7G	PPS Polyphenylene sulfide					Xylene, Carbon tetrachloride Trichloroethylene, Silicon oils, Ethanol	Acetone, Chlorosulfonic acid, Formalin, Ammonia water, Glacial acetic acid
DPE-100-7P DPE-400-7P DPE-400BL-7P DPE-800-7P				FFKM Perfluoroelastomer		Ethanol, Chloroform, Benzene Glacial acetic acid, Methyl ethyl ketone	Chlorosulfonic acid, Fluorine oil, CFC 112, CFC 113

*This chart is for reference only. Please confirm under the operating conditions before use.

External Dimensions (Unit: mm)

DPE-100

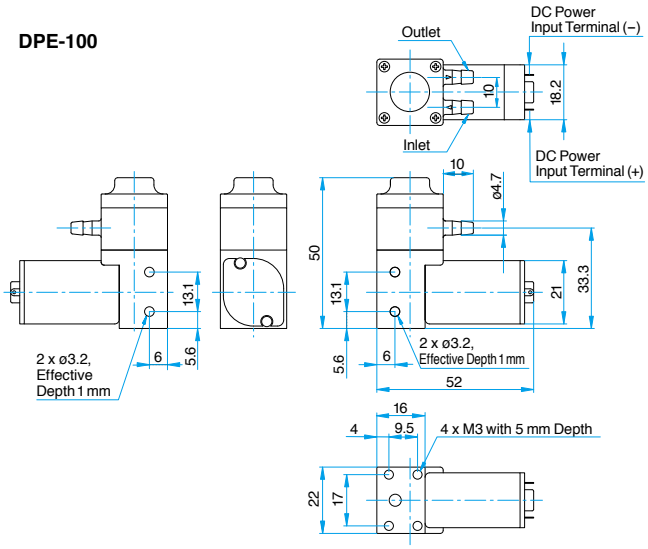

DPE-400

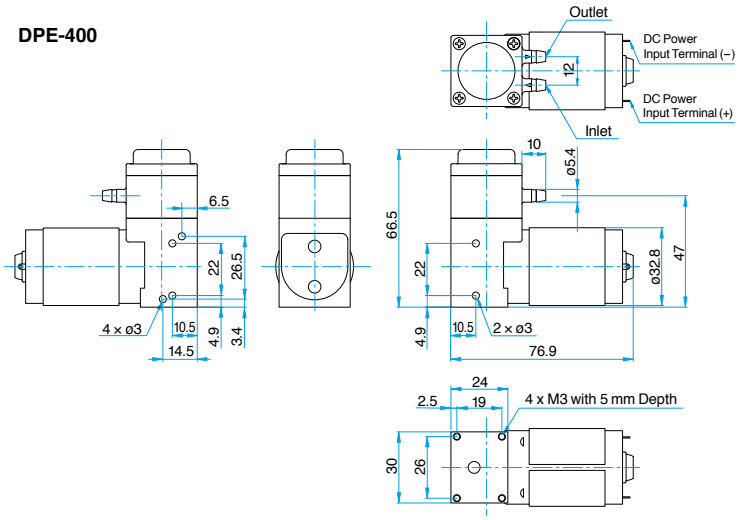

DPE-400BL

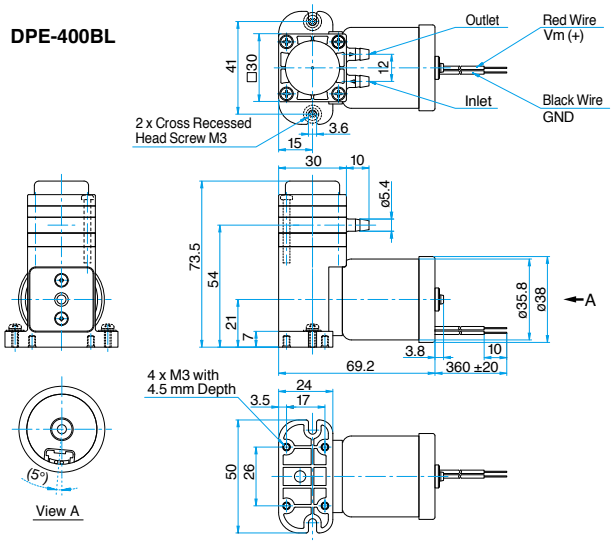

DPE-800

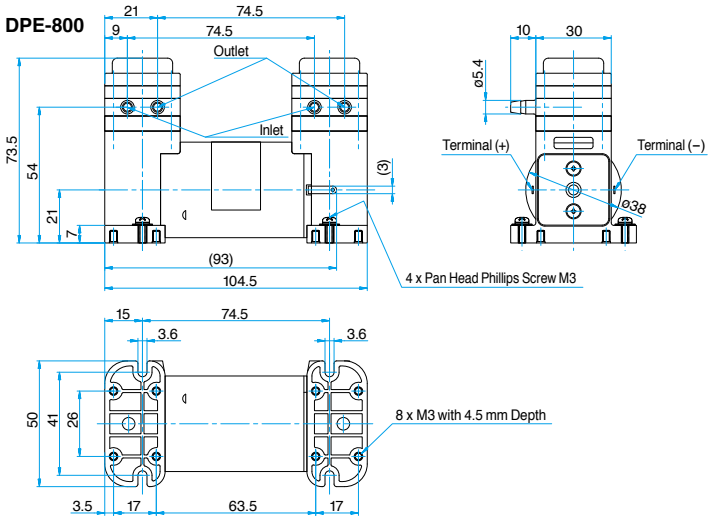

DC Liquid Pump

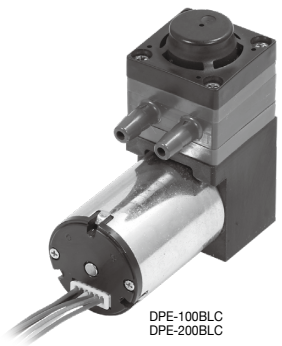
DPE-100BLC
DPE-200BLC

Model DPE-100BLC / DPE-200BLC

CE 24 V | UKCA 24 V

Brushless DC Motor **24 V DC**

Flow & Electric Current

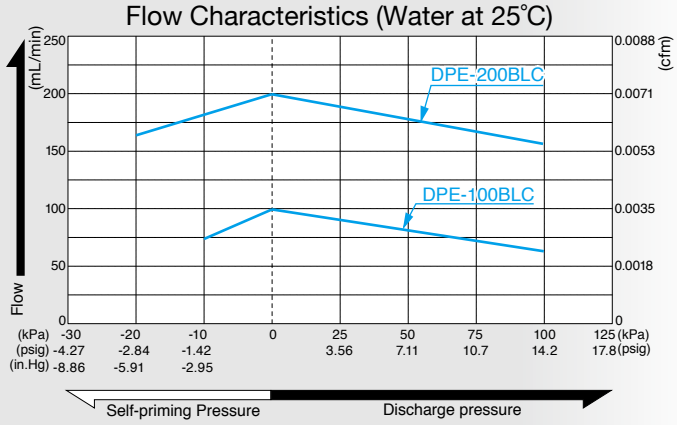

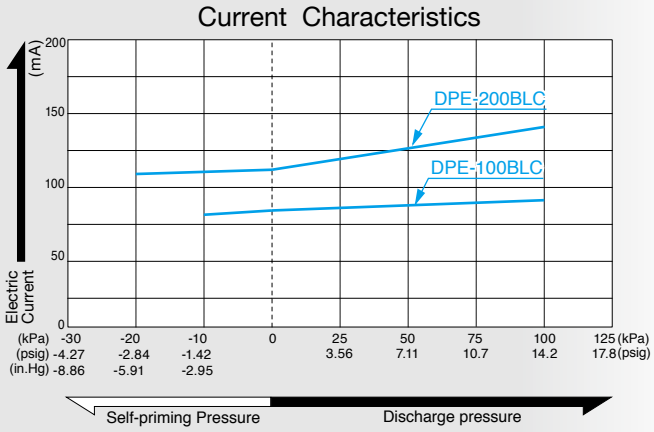

Specifications

Model	DPE-100BLC	DPE-200BLC
Rated Voltage	24 V DC	
Flow Rate *1	100 mL/min 0.0035 cfm	200 mL/min 0.0071 cfm
Working Pressure Range	0 to 100 kPa (0 to 1 kgf/cm²) 0 to 1 bar 0 to 14.2 psig	
Maximum Pressure *2	300 kPa (3 kgf/cm²) 3 bar 42.7 psig	
Maximum Current	90 mA	140 mA
Duty Cycle	Continuous	
Rated Performance (MTTF)	6000 hours	
Self-priming Pressure *1	10 kPa (75 mmHg) 0.1 bar 1.42 psig	20 kPa (150 mmHg) 0.2 bar 2.84 psig
Inlet	4.7 mm O.D. hose barb	
Outlet	4.7 mm O.D. hose barb	
Insulation Classification	Class E equivalent	
Mounting Dimensions	9.5(L)× 17(W) mm 3/8"(L) x 43/64"(W)	
Weight	80 g 0.176 Lbs	

*1 When the check valve is hardened due to low liquid temperature, self-priming performance and flow rate will go down.
*2 The unit cannot be restarted with flow passage closed. It cannot be used at the maximum pressure.

Condition of Use

Operating Ambient Temperature	5 to 40°C
Operating Ambient Humidity	30 to 85%
Operating Fluid Temperature	5 to 50°C

Application Examples

- Liquid transport for analytical instruments e.g. medical, food, water treatment and environment measurement.
- Liquid transport within filtration, sampling, washers and sterilizers.
- Ink transport within industrial ink-jet printers.

Pulse Absorption Mechanism

1. Suction
2. Discharge. Partial fluid delivery to pulse absorption chamber, not directly forced to outlet port.
3. Cyclical suction drawn into pump is synchronized with the discharge. Pulses are attenuated through the process of 2 and 3 .

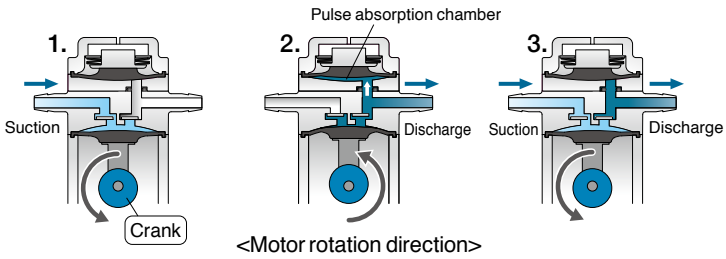

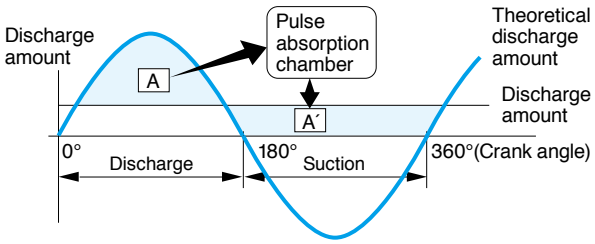

- The cause of pulsation (A) is taken into the pulse absorption chamber and discharged at the time of suction (A') to reduce pulse.
- Pulsation: Vibration due to change in pressure and flow rate

Material of wetted parts and applicable fluid

Model	Material of wetted parts					Example of suitable chemical liquid *	Example of unsuitable chemical liquid
	Cylinder Head	Head Cover	Diaphragm	Valve	O-ring		
DPE-100BLC-2E **DPE-200BLC-2E**	PA Polyamide(Nylon)		PTFE Polytetrafluoroethylene	EPDM Ethylene-propylene rubber		Ammonia water, Citric acid, Caustic soda, Ethanol, Caustic potash	Mineral oil, Trichloroethylene, Benzaldehyde, Carbon tetrachloride, Toluene
DPE-100BLC-7G **DPE-200BLC-7G**	PPS Polyphenylene sulfide			FKM Fluoro rubber		Ethanol, Carbon tetrachloride, Trichloroethylene, Xylene, Silicone oil	Acetone, Chlorosulfonic acid, Formalin, Ammonia water, Glacial acetic acid
DPE-100BLC-7P **DPE-200BLC-7P**				FFKM Perfluoroelastomer		Ethanol, Glacial acetic acid, Methyl ethyl ketone, Chloroform, Benzene	Chlorosulfonic acid, CFC 112, Fluorine oil, CFC 113

*This chart is for reference only. Please confirm under the operating conditions before use.

Control Function

No.	Function	Specifications	Conditions
1	Power source	24 V DC	
2		GND	
3	FG signal output	6 Pulse/1 Rotation	Open-drain output
	Pull up voltage	5 V DC	
4	PWM control input	0 to 100%	2 to 5 V DC (max=5 V DC) Recommended frequency 15 to 25 kHz
	Voltage control input	0 to 5 V DC max=5 V DC	Variability range =0.6 to 3.2 V DC (Duty cycle: 0 to 100%)
5	PWM control selection	ON/OFF	PWM control ON with open circuit
	Voltage control selection	ON/OFF	Voltage control ON with 2 to 5 V DC input
6	5 V DC output	5 V DC output	5 V DC output during motor startup

Reference circuit diagram

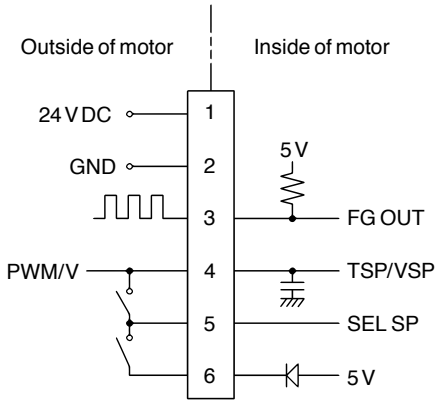

Reference of voltage control

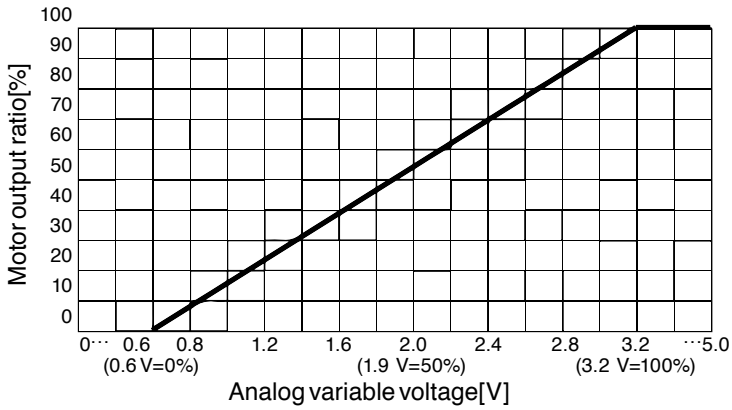

•The actual number of rotations of motor depends on the power supply voltage and load conditions of pump.
Examine the variable state of pump output under the conditions of actual use.

External Dimensions (Unit: mm)

DPE-100BLC
DPE-200BLC

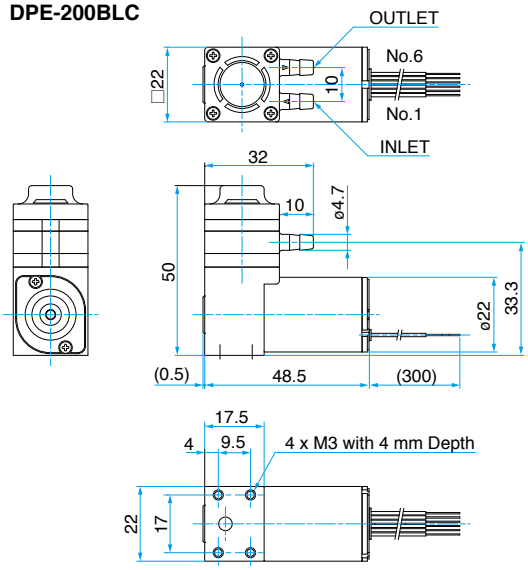

Connection table

		Power Source		Control Signal			
Circuit No.		1	2	3	4	5	6
Cord Color		RED	BLACK	YELLOW	BLUE	GREEN	BROWN
Function		V+	V-	Pulse	PWM or voltage input	Voltage control	DC 5V output
Selection of connection	With no control	ON			ON*1		ON*1
	PWM control	ON			ON*2		
	Voltage control	ON			ON*3	ON*3	ON*3
Cord Size		AWG26		AWG28			
Cord UL Style		UL1061					

*1 For non-control (Duty cycle: 100%) drive, short-circuit pins 4 and 6.
*2 For PWM control drive, keep pin 5 in an open state and input PWM signal (Duty cycle: 0 to 100%, 2 to 5 V DC, and recommended frequency 15 to 25 kHz) to pin 4.
*3 For analog voltage control drive, short-circuit pins 5 and 6 and apply the voltage (0 to 5 V DC and variable range 0.6 to 3.2 V DC) to pin 4.
•Take noise countermeasures for the signal wire if necessary.
•Please cut the unnecessary lead wires so that there is no trouble in operating the unit.

AC LINEAR
Free Piston Blower

MEDO BLOWER

Page

LA-28B — 95
LA-45C — 95
LA-60B — 96
LA-80B — 96
LA-100A — 97
LA-120A — 97
LAM-200 — 98

Made to Order
LAM-150 — 109

LA series

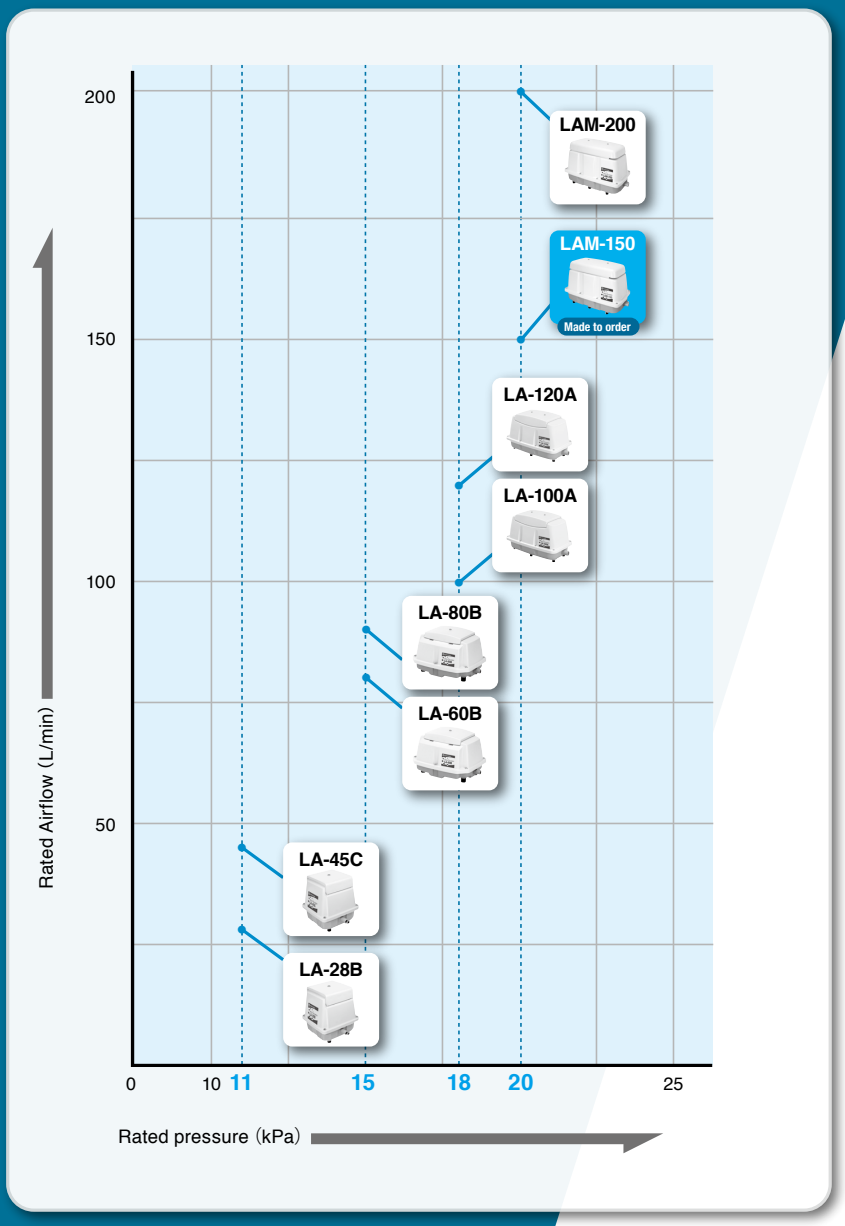

MEDO BLOWER

Model LA-28B / LA-45C

120 V (60 Hz) | 230 V (50 Hz) | 230 V (50 Hz)

Airflow Characteristics

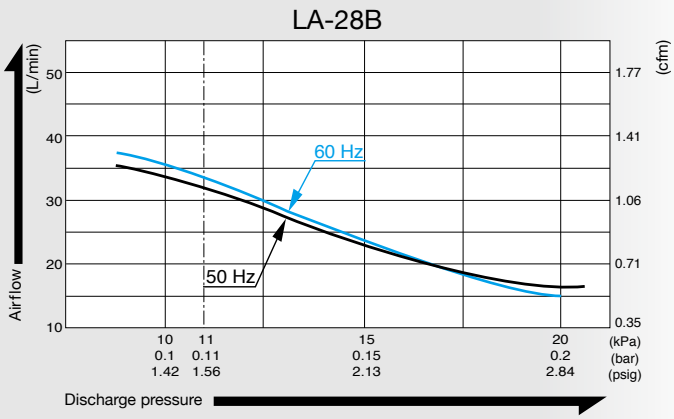

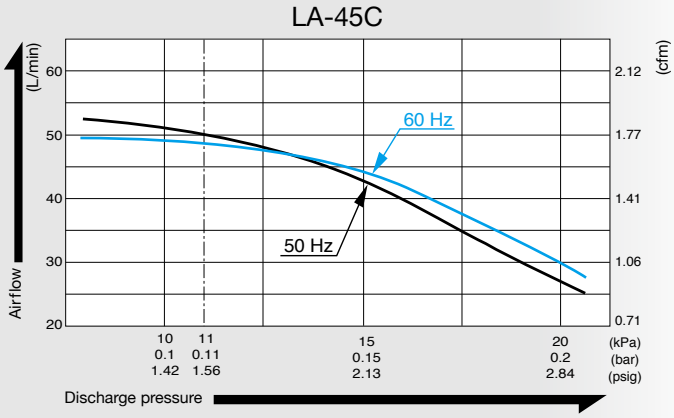

Specifications

Model	LA-28B		LA-45C	
Power Supply	120 V AC	230 V AC*	120 V AC	230 V AC*
Rated Frequency	60 Hz	50 Hz	60 Hz	50 Hz
Power Consumption	25.5 W	29 W	45 W	47 W
Rated Pressure	11 kPa (0.11 kgf/cm^2) 0.11 bar 1.56 psig			
Rated Airflow	28 L/min 0.99 cfm		45 L/min 1.59 cfm	
Weight	2.9 kg 6.4 Lbs		3.2 kg 7.1 Lbs	

*Please contact us for 240 V AC model.

Optional Hose Assemblies

LB03185	LB08316

Application Examples

Liquid Mixer Bubbling

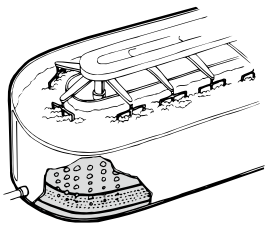

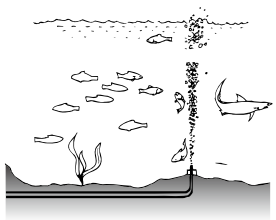

External Dimensions (Unit: mm)

LA-28B

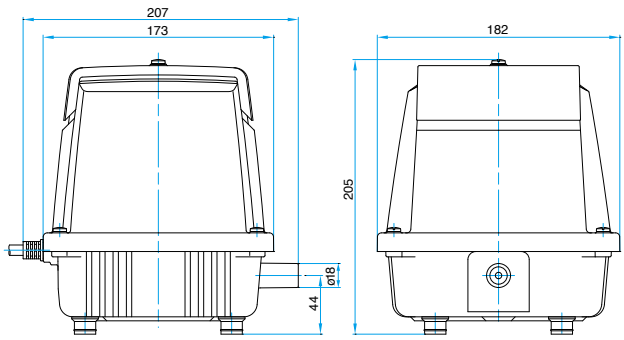

LA-45C

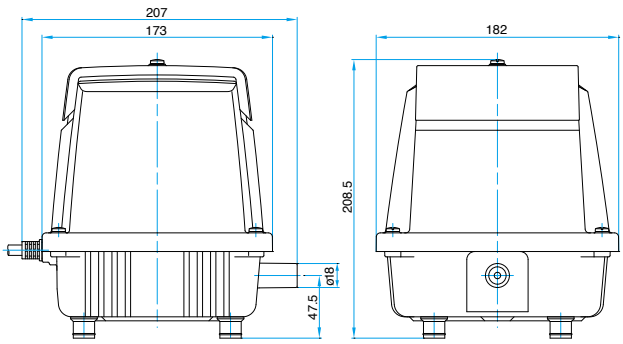

MEDO BLOWER

Model LA-60B / LA-80B

120 V (60 Hz) | 230 V (50 Hz) LA-60B | 230 V/240 V (50 Hz) LA-80B | 230 V (50 Hz)

Airflow Characteristics

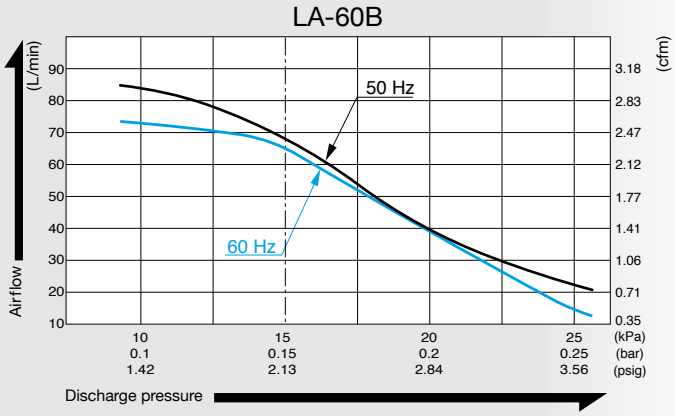

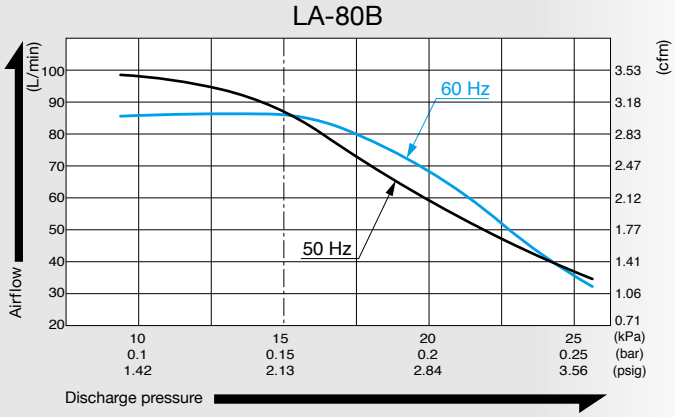

Specifications

Model	LA-60B		LA-80B	
Power Supply	120 V AC	230 V AC*	120 V AC	230/240 V AC
Rated Frequency	60 Hz	50 Hz	60 Hz	50 Hz
Power Consumption	60 W	64 W	80 W	86 W
Rated Pressure	15 kPa (0.15 kgf/cm^2) 0.15 bar 2.13 psig			
Rated Airflow	60 L/min 2.12 cfm		80 L/min 2.83 cfm	
Weight	5.0 kg 11 Lbs		5.3 kg 11.7 Lbs	

*Please contact us for 240 V AC model.

Optional Hose Assemblies

LB03185	LB08316

Application Examples

Liquid Mixer Bubbling

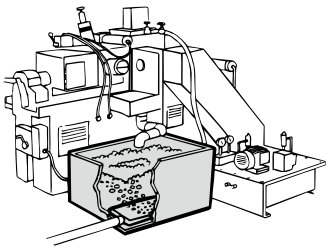

Home Aerobic Sewage Treatment System

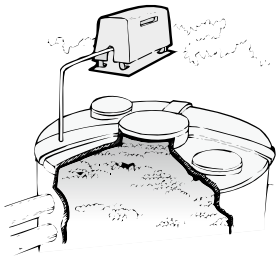

External Dimensions (Unit: mm)

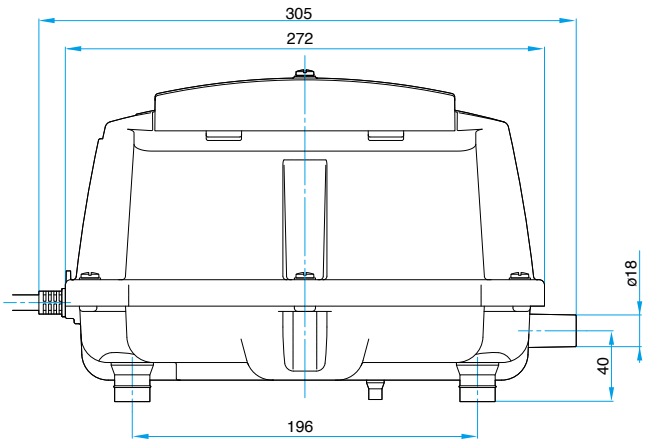

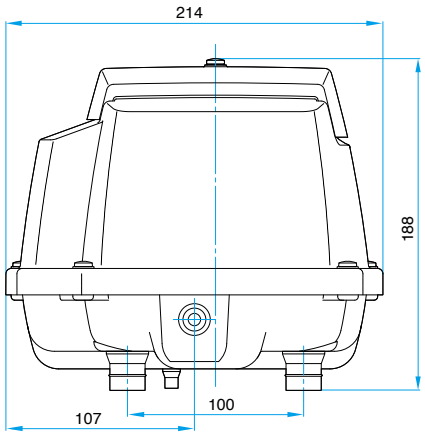

MEDO BLOWER

Model LA-100A / LA-120A

120 V is made to order

120 V (60 Hz) | 230 V (50 Hz) LA-100A | 230 V/240 V (50 Hz) LA-120A | 230 V (60 Hz)

Airflow Characteristics

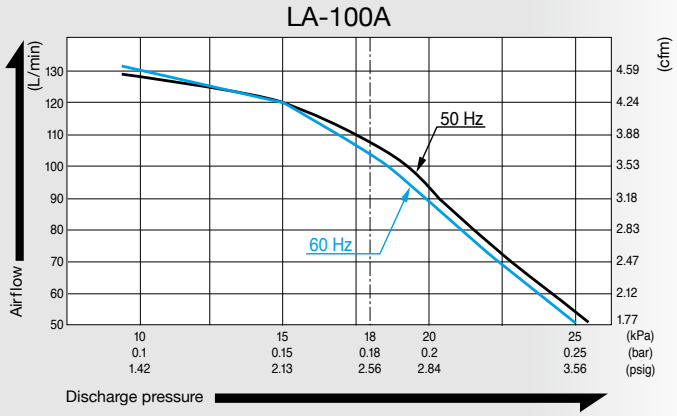

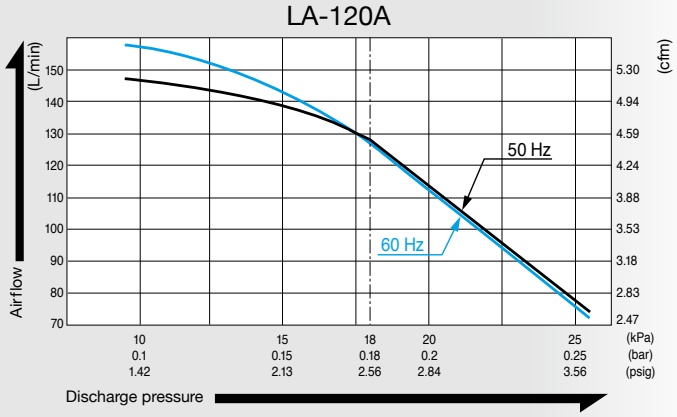

Specifications

Model	LA-100A		LA-120A	
Power Supply	120 V AC*1	230 V AC*2	120 V AC*1	230/240 V AC
Rated Frequency	60 Hz	50 Hz	60 Hz	50 Hz
Power Consumption	95 W	100 W	118 W	130 W
Rated Pressure	18 kPa (0.18 kgf/cm^2) 0.18 bar 2.56 psig			
Rated Airflow	100 L/min 3.53 cfm		120 L/min 4.24 cfm	
Weight	9.7 kg 21.4 Lbs			

*1: 120 V is made to order.
*2: Please contact us for 240 V AC model.

Optional Hose Assemblies

LB03965	LB01070
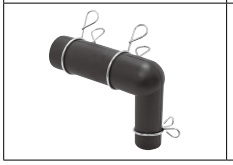	

Application Examples

Liquid Mixer Bubbling

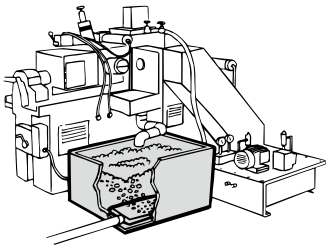

Home Aerobic Sewage Treatment System

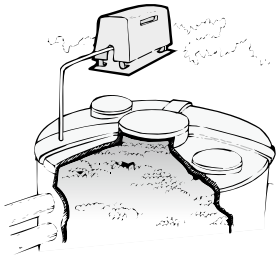

External Dimensions (Unit: mm)

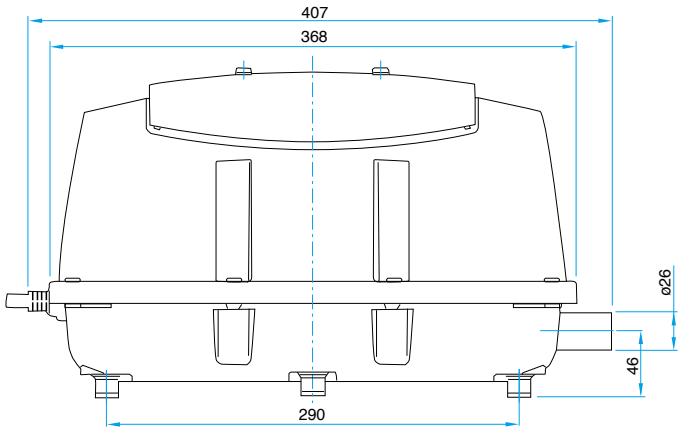

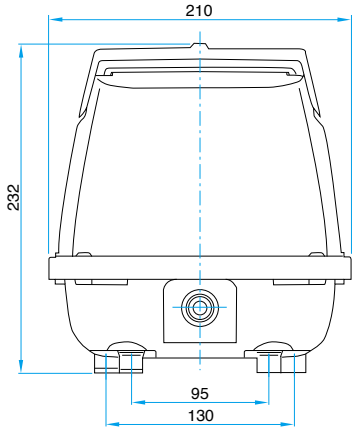

MEDO BLOWER

Model LAM-200

120 V (60 Hz) | 230 V/240 V (50 Hz) | 230 V (50 Hz)

Airflow Characteristics

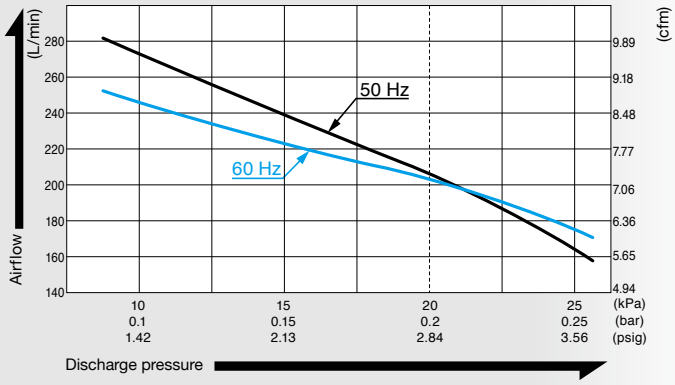

Specifications

Model	LAM-200	
Power Supply	120 V AC	230/240 V AC
Rated Frequency	60 Hz	50 Hz
Power Consumption	215 W	
Rated Pressure	20 kPa (0.2 kgf/cm^2) 0.2 bar 2.84 psig	
Rated Airflow	200 L/min 7.06 cfm	
Weight	12.3 kg 27.1 Lbs	

Optional Hose Assemblies

LB03965	LB01070
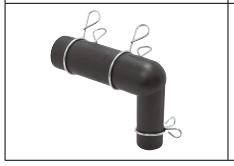	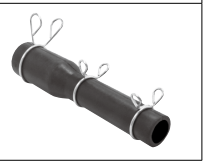

Application Examples

Grease Trap

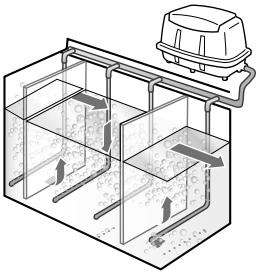

Home Aerobic Sewage Treatment System

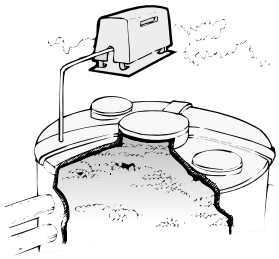

External Dimensions (Unit: mm)

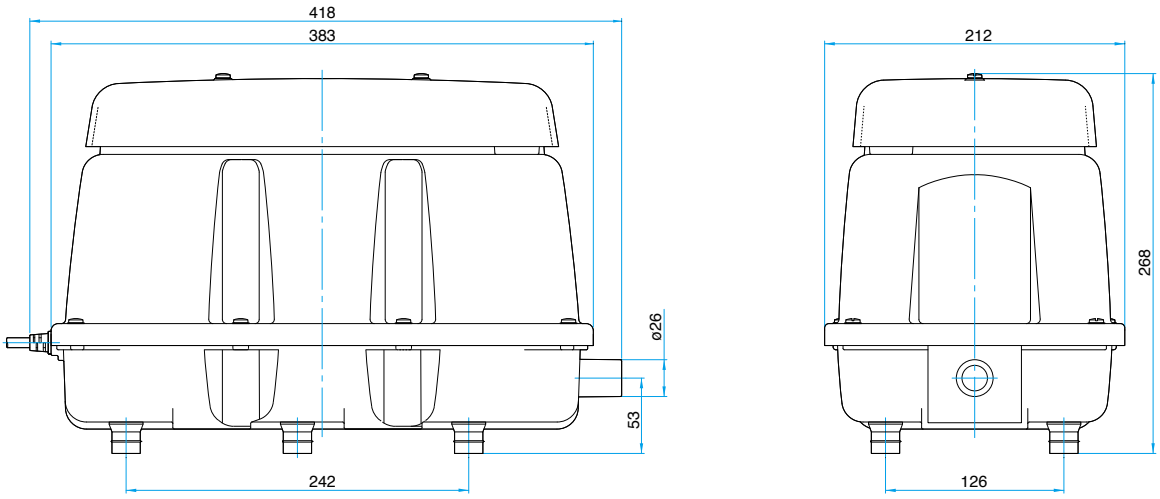

MADE TO ORDER

		Page
Compressor	AC0210	101
	AC0610A	102
Vacuum Pump	VP0925A	103
	VP0660 x 2	104
Diaphragm Pump	VCK0120 Vacuum Pump Type	105
	VC0101E Dual Type	106
	VC0101E Blower Type	107
	VC0101S Dual Type	108
Blower	LAM-150	109
Piezoelectric Pump	Made to order model	110

Compressor

Model ACO210

Made to order

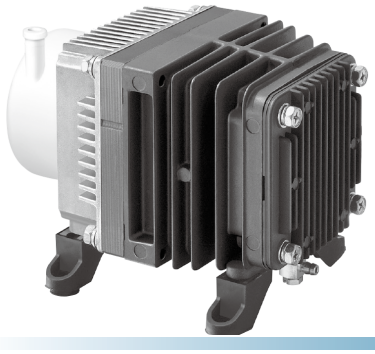

Airflow & Power Consumption

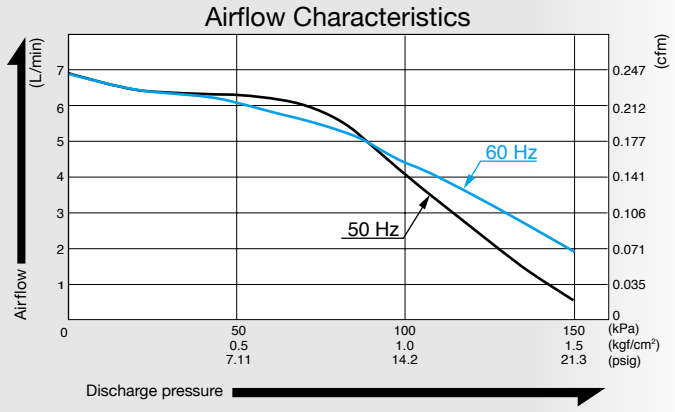

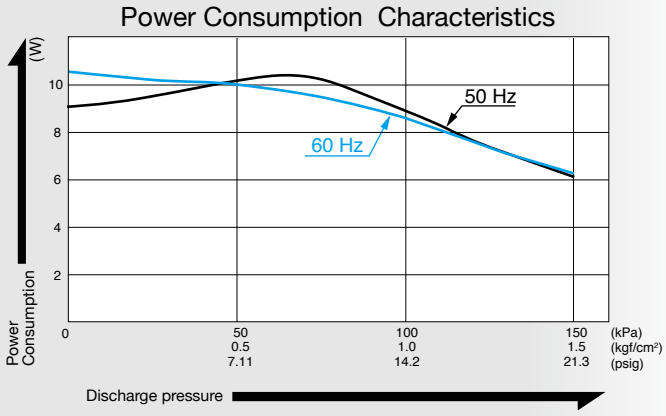

Specifications

Rated Pressure	100 kPa (1.0 kgf/cm²) 1.0 bar 14.2 psig	
Rated Airflow	3.5 L/min 0.124 cfm	
Maximum Pressure	120 kPa (1.2 kgf/cm²) 1.2 bar 17.1 psig	
Rated Voltage	115 V AC	230 V AC
Power Consumption	23 W	24 W
Rated Frequency	60 Hz	50 Hz
Rated Performance	5,000 hours	
Outlet	4.7 mm O.D. hose barb	
Duty Cycle	Continuous	
Coil Insulation Class	Class B for UL	Class E equivalent
Mounting Dimensions	76 (L) x 88 (W) mm 2 - 63/64" (L) x 3 - 15/32" (W)	
Weight	1.7 kg 3.7 Lbs	
Leadwire Length	300 mm 11 - 13/16"	

Application Examples

Air Bearing for Precision Machines

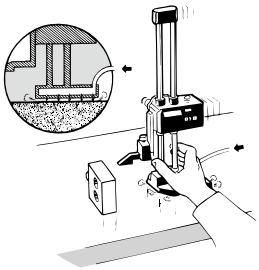

Nebulizer

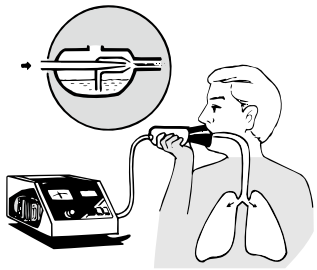

External Dimensions (Unit: mm)

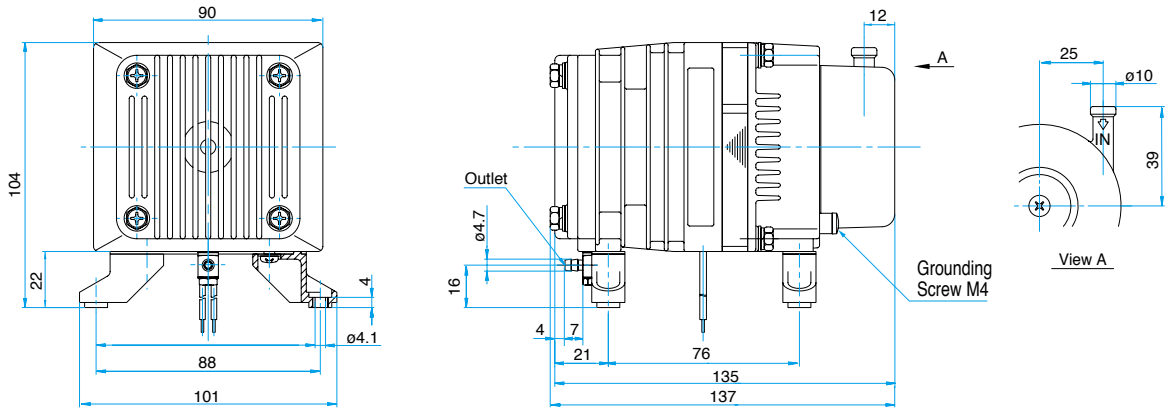

Compressor

Model AC0610A

Made to order

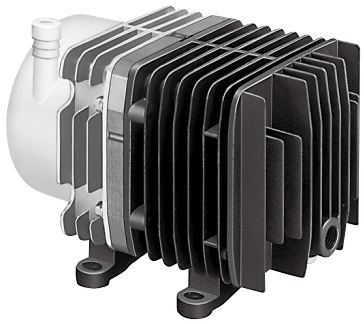

Airflow & Power Consumption

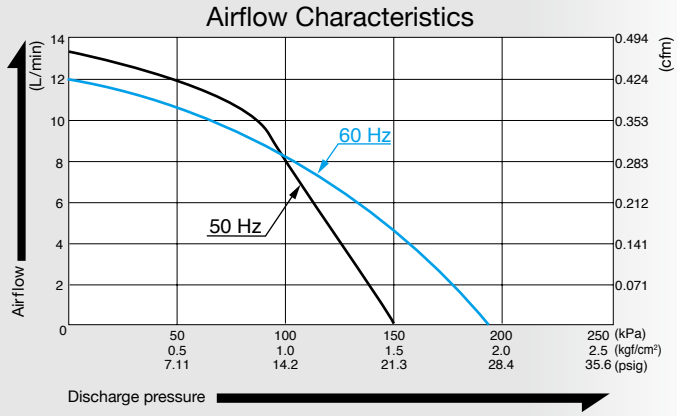

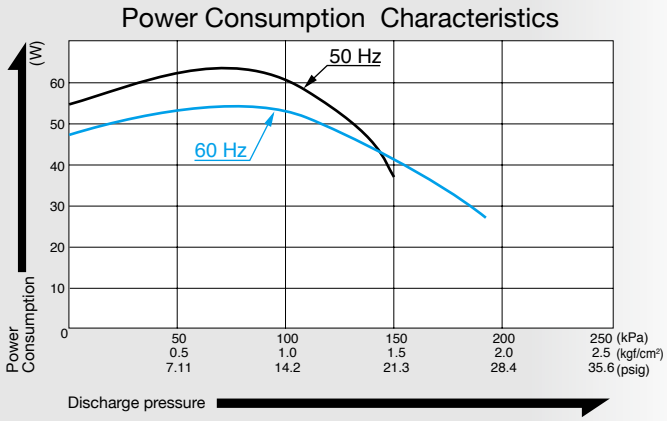

Specifications

Rated Pressure	100 kPa (1.0 kgf/cm²) 1.0 bar 14.2 psig	
Rated Airflow	8 L/min 0.283 cfm	
Maximum Pressure	150 kPa (1.5 kgf/cm²) 1.5 bar 21.3 psig	
Rated Voltage	115 V AC	230 V AC
Power Consumption	52 W	60 W
Rated Frequency	60 Hz	50 Hz
Rated Performance	10,000 hours	
Outlet	ISO Rc 1/4	
Duty Cycle	Continuous	
Coil Insulation Class	Class F equivalent	
Mounting Dimensions	68 (L) x 84 (W) mm 2 - 43/64" (L) x 3 - 5/16" (W)	
Weight	3.2 kg 7.1 Lbs	
Leadwire Length	200 mm 7 - 7/8"	

Application Examples

Dispenser

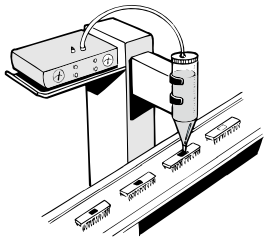

Automatic Stamper

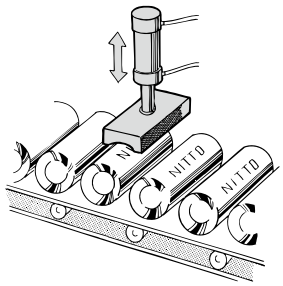

External Dimensions (Unit: mm)

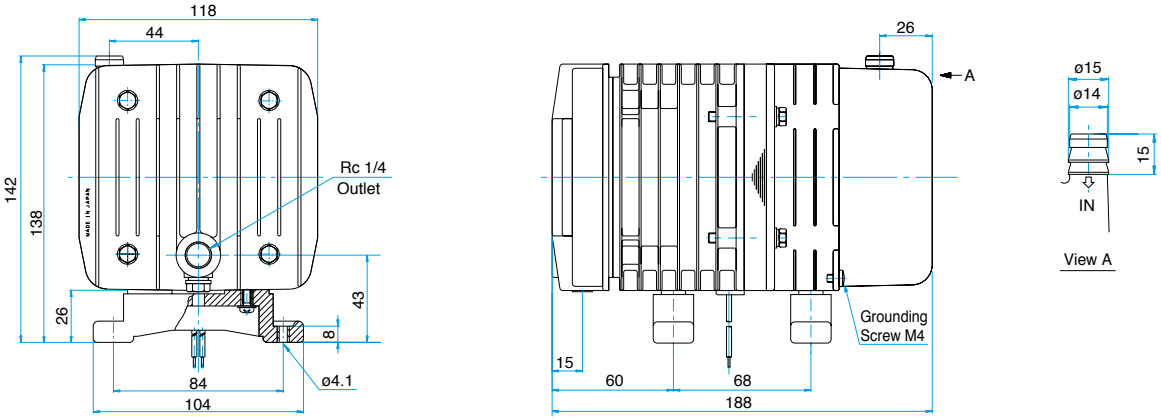

Vacuum Pump

Model VP0925A

Made to order

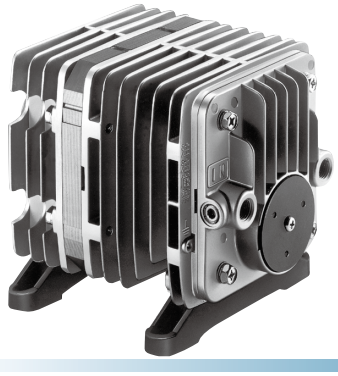

Airflow & Power Consumption

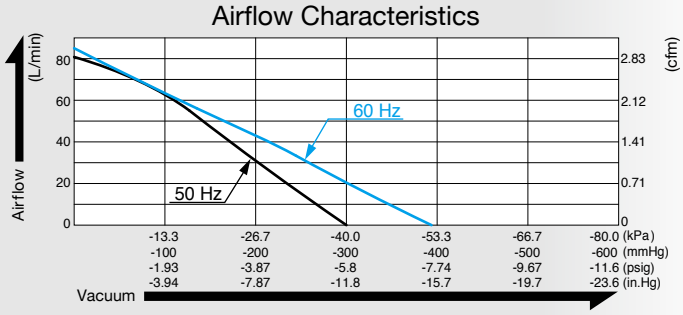

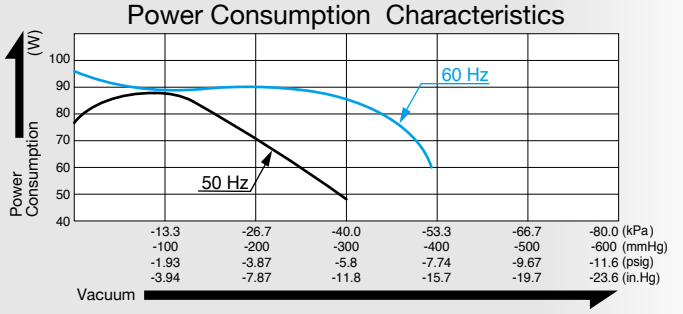

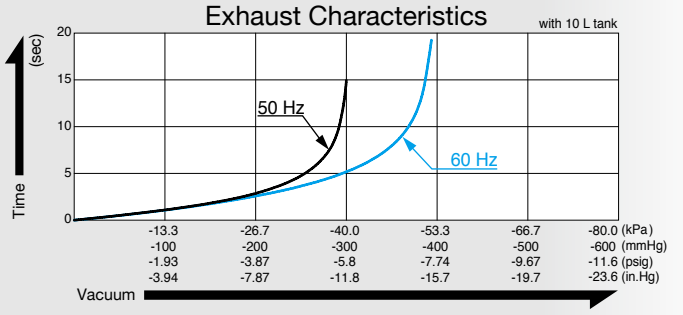

Specifications

Attainable Vacuum *1	-33.3 kPa (-250 mmHg) -333 mbar -9.84 in. Hg	
Free Air Displacement	80 L/min 2.83 cfm	
Rated Voltage	115 V AC	230 V AC
Power Consumption	95 W	88 W
Rated Frequency	60 Hz	50 Hz
Rated Performance	10,000 hours	
Inlet	ISO Rc 1/4	
Outlet	ISO Rc 1/4	
Duty Cycle	Continuous	
Coil Insulation Class	Class B equivalent	
Mounting Dimensions	102 (L) x 130 (W) mm 4 - 1/64" (L) x 5 - 1/8" (W)	
Weight	4.5 kg 9.9 Lbs	
Leadwire Length	300 mm 11 - 13/16"	320 mm 12 - 19/32"

*1: Operations at higher than -33.3 kPa need an additional leak valve or relief valve on the inlet piping.

Application Examples

Microfiche Camera

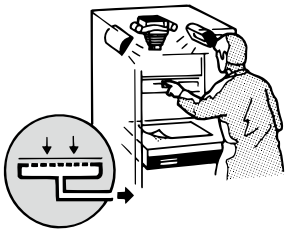

Vacuum Material Handling Equipment

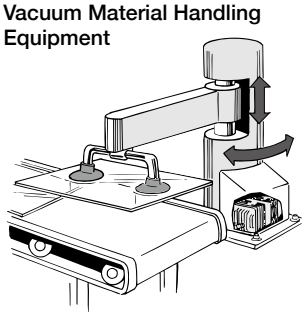

External Dimensions (Unit: mm)

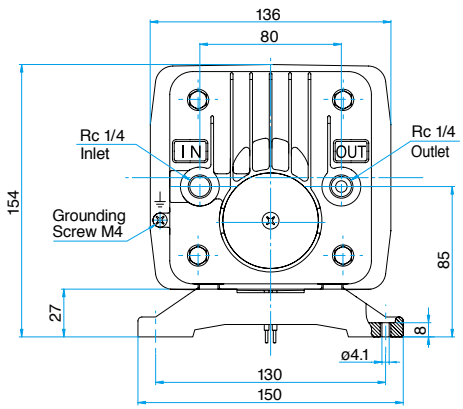

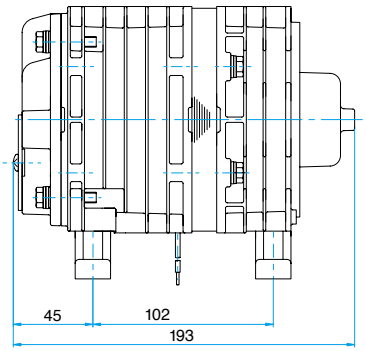

Vacuum Pump

Model VP0660x2

Made to order

Airflow & Power Consumption

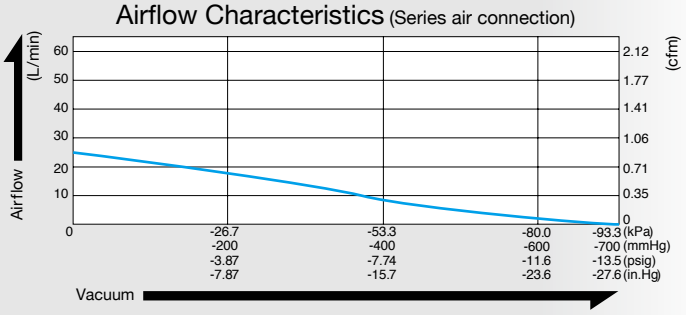

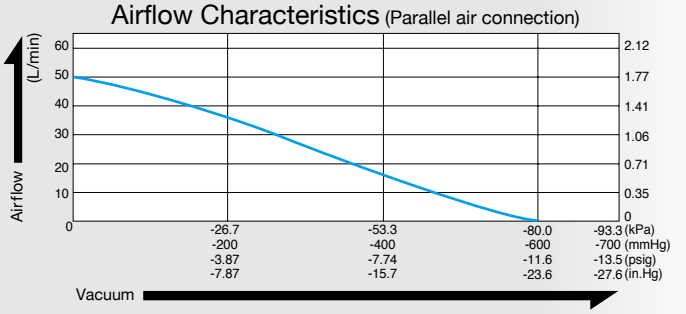

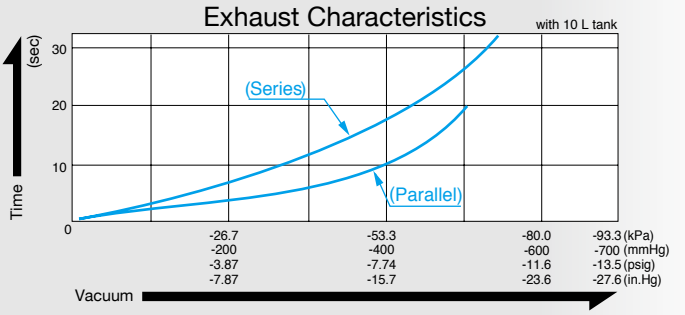

Specifications

Attainable Vacuum *1	Series Connection	-93.3 kPa (-700 mmHg) -933 mbar -27.6 in. Hg	Parallel Connection	-80 kPa (-600 mmHg) -800 mbar -23.6 in. Hg
Free Air Displacement		25 L/min 0.88 cfm		50 L/min 1.77 cfm
Rated Performance	6,000 hours			
Rated Voltage	115 V AC		230 V AC	
Power Consumption	125 W		100 W	
Rated Frequency	60 Hz		50 Hz	
Inlet	ISO Rc 1/4, 2 ports			
Outlet	ISO Rc 1/4, 2 ports			
Duty Cycle	Continuous			
Coil Insulation Class	Class B equivalent			
Mounting Dimensions	280 (L) x 130 (W) mm 11 - 1/32" (L) x 5 - 1/8" (W)			
Weight	10 kg 22 Lbs			
Leadwire Length	150 mm 5 - 29/32"		600 mm 23 - 5/8"	

*1: Operations at higher than -93.3 kPa in series or -80 kPa in parallel need an additional leak valve or relief valve on the inlet piping.

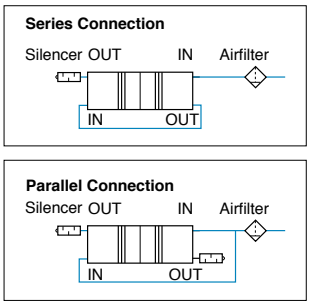

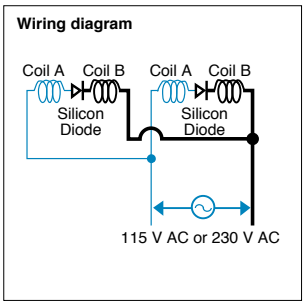

* Air line connection is required by the user.

External Dimensions (Unit: mm)

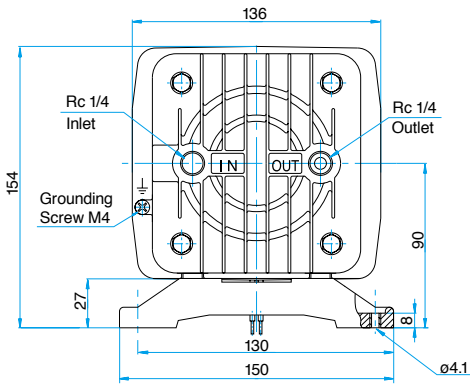

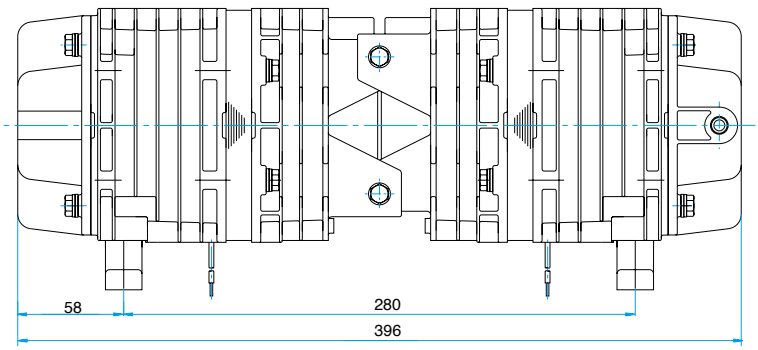

Vacuum Pump

Model VCK0120

Made to order

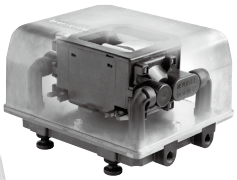

*Internal image

Airflow & Power Consumption

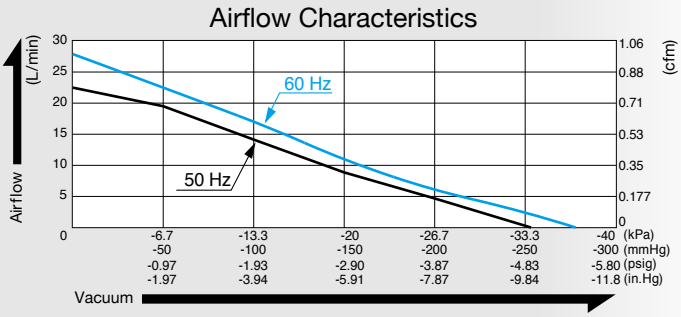

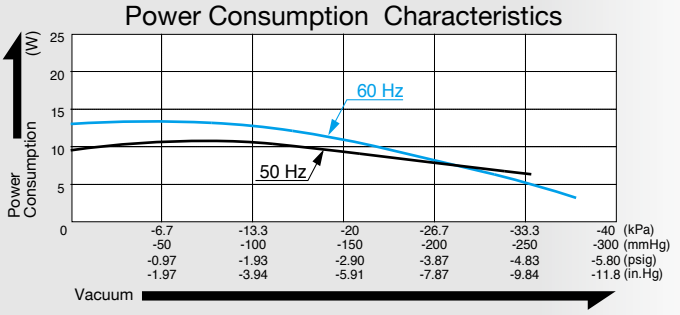

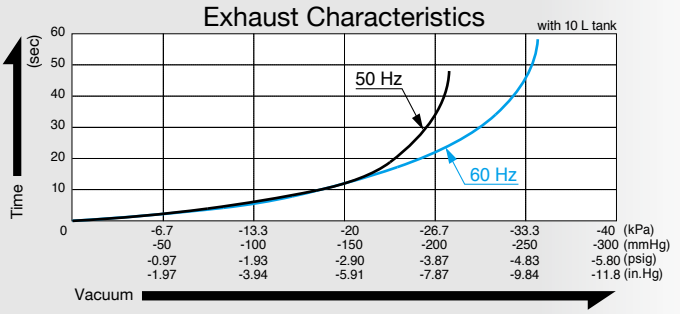

Specifications

Attainable Vacuum	-26.7 kPa (-200 mmHg) - 267 mbar - 7.87 in.Hg	
Free Air Displacement	18 L/min 0.64 cfm	
Rated Voltage	120 V AC	230 V AC
Power Consumption	14 W	11 W
Rated Frequency	60 Hz	50 Hz
Rated Performance	5,000 hours	
Inlet	ISO Rc 1/8	
Outlet	ISO Rc 1/8	
Duty Cycle	Continuous	
Coil Insulation Class	Class B equivalent	
Mounting Dimensions	152 (L) x 128 (W) mm 5 - 63/64" (L) x 5 - 3/64" (W)	
Weight	1.9 kg 4.2 Lbs	
Leadwire Length	300 mm 11 - 13/16"	

Application Examples

Medical Cup Suction

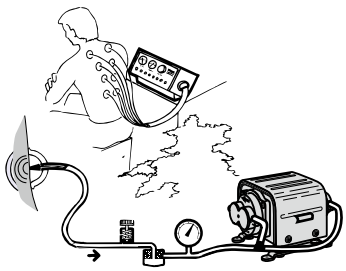

External Dimensions (Unit: mm)

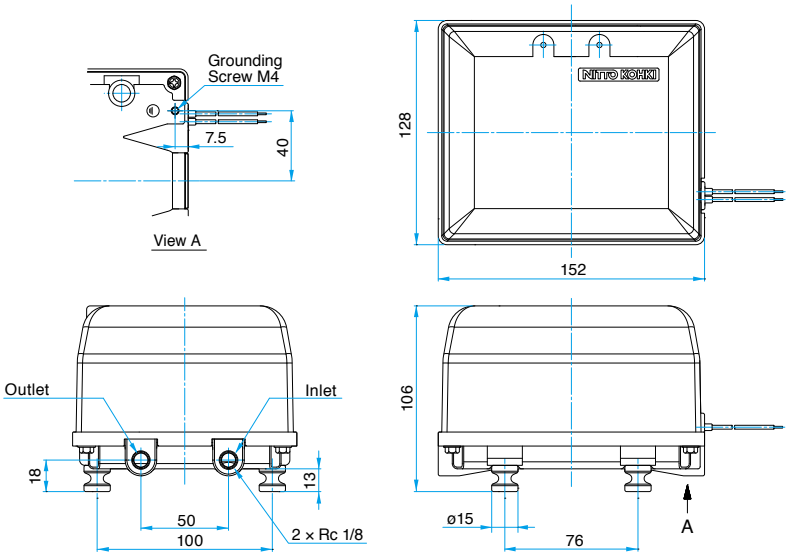

Compressor and Vacuum Pump

Model VC0101E

Made to order

Dual Type

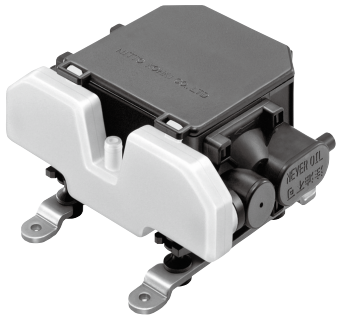

Airflow & Power Consumption

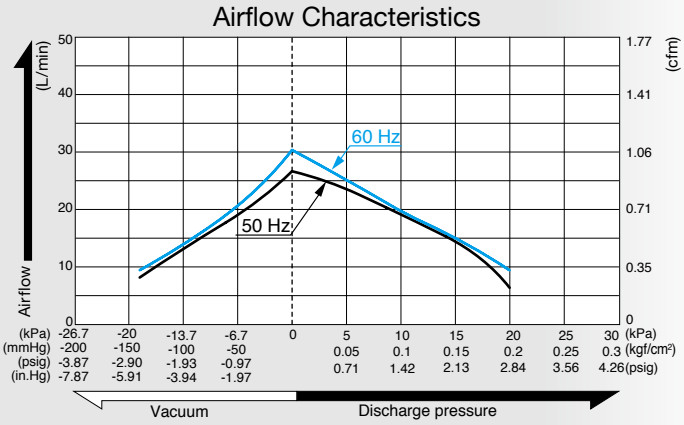

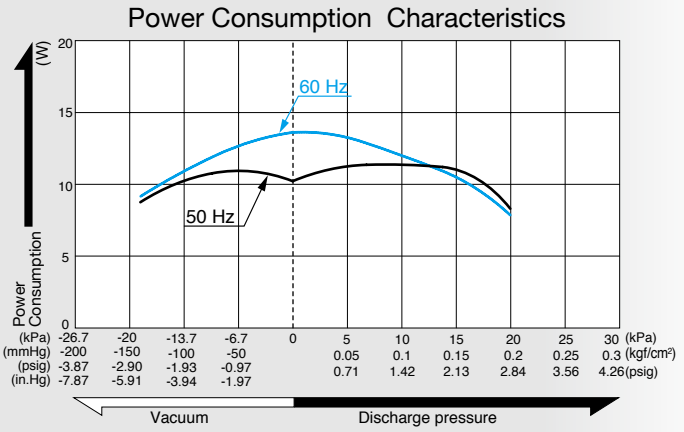

Specifications

Rated Pressure	10 kPa (0.1 kgf/cm²) 0.1 bar 1.42 psig	
Rated Airflow	15 L/min 0.53 cfm	
Maximum Pressure	20 kPa (0.2 kgf/cm²) 0.2 bar 2.84 psig	
Attainable Vacuum	-18.7 kPa (-140 mmHg) -186 mbar -5.51 in.Hg	
Rated Voltage	120 V AC	230 V AC
Power Consumption	11.5 W	
Rated Frequency	60 Hz	50 Hz
Rated Performance	5,000 hours	
Working Pressure Range	-18.7 kPa to 20 kPa (-140 mmHg to 0.2 kgf/cm²) -187 mbar to 0.2 bar -5.51 in.Hg to 2.84 psig	
Inlet	7.5 mm O.D. hose barb	
Outlet	7.5 mm O.D. hose barb	
Duty Cycle	Continuous	
Coil Insulation Class	Class E equivalent	
Mounting Dimensions	66 (L) x 100 (W) mm 2 - 19/32" (L) x 3 - 15/16" (W)	
Weight	0.82 kg 1.81 Lbs	
Leadwire Length	300 mm 11 - 13/16"	

A UL approved model for 120 V is available upon request.

Application Examples

Massage Devices

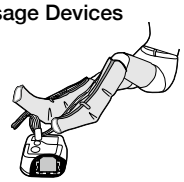

Bedsore Prevention Mattress

External Dimensions (Unit: mm)

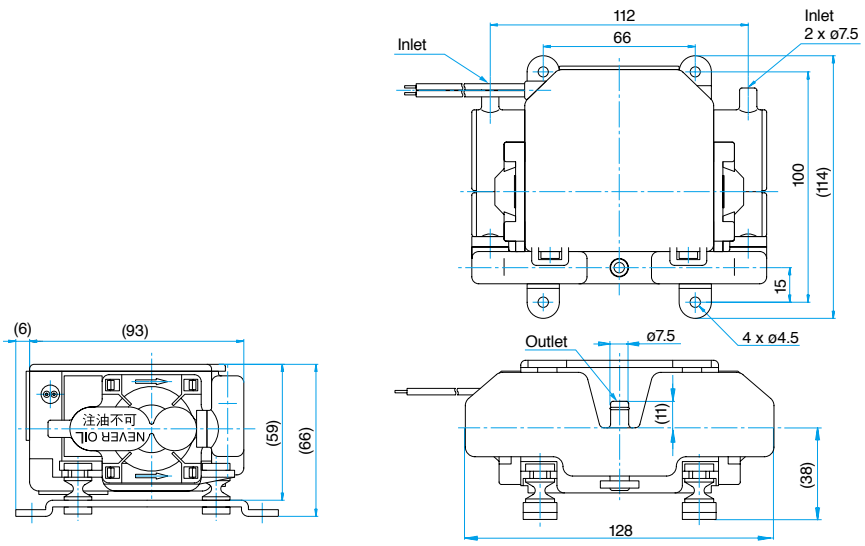

Compressor

Model VC0101E

Made to order

Blower Type

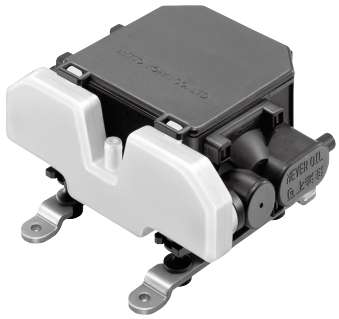

Airflow & Power Consumption

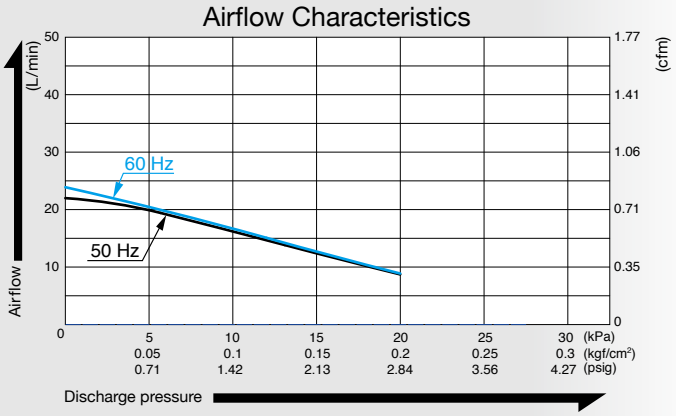

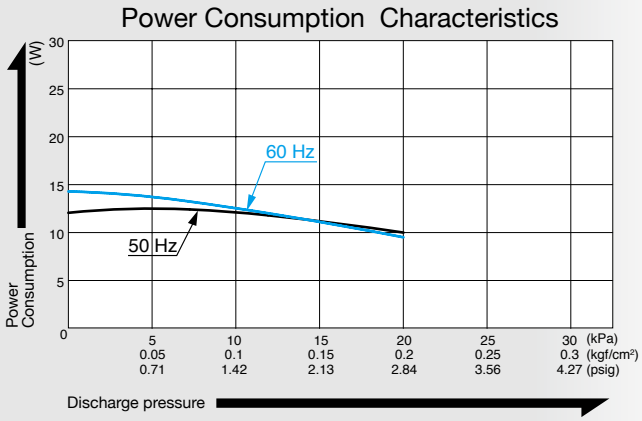

Specifications

Rated Pressure	10 kPa (0.1 kgf/cm²) 0.1 bar 1.42 psig	
Rated Airflow	15 L/min 0.53 cfm	
Maximum Pressure	20 kPa (0.2 kgf/cm²) 0.2 bar 2.84 psig	
Rated Voltage	120 V AC	230 V AC
Power Consumption	11.5 W	
Rated Frequency	60 Hz	50 Hz
Rated Performance	5,000 hours	
Working Pressure Range	0 to 20 kPa (0 to 0.2 kgf/cm²) 0 to 0.2 bar 0 to 2.84 psig	
Outlet	7.5 mm O.D. hose barb	
Duty Cycle	Continuous	
Coil Insulation Class	Class E equivalent	
Mounting Dimensions	66 (L) x 100 (W) mm 2 - 19/32" (L) x 3 - 15/16" (W)	
Weight	0.82 kg 1.81 Lbs	
Leadwire Length	300 mm 11 - 13/16"	

A UL approved model for 120 V is available upon request.

Application Examples

Massage Devices

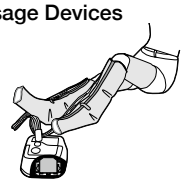

Bedsore Prevention Mattress

External Dimensions (Unit: mm)

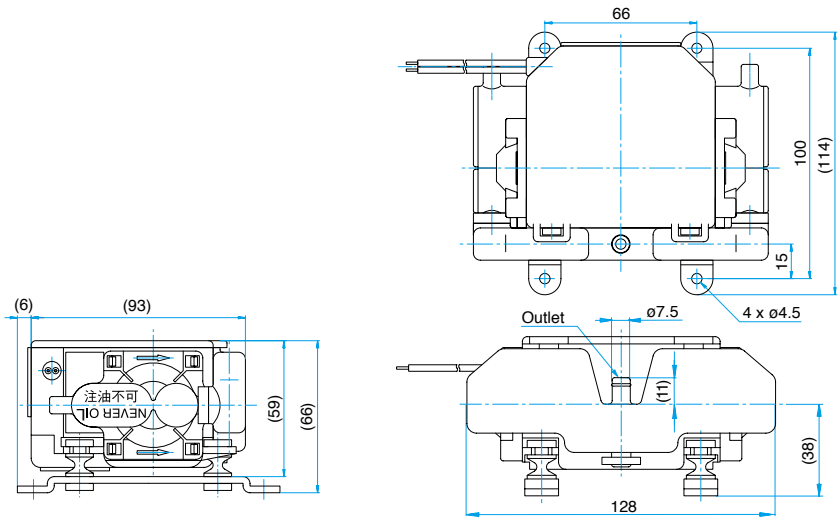

Compressor and Vacuum Pump

Model VC0101S

Made to order

Dual Type

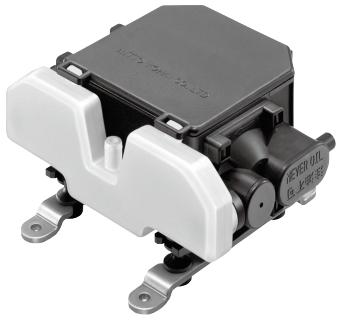

Airflow & Power Consumption

Airflow Characteristics

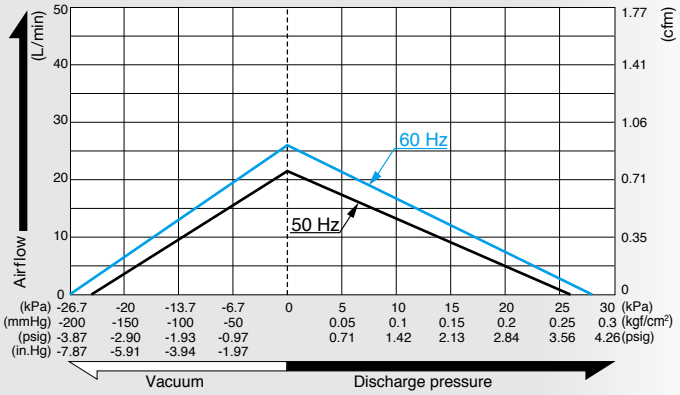

Power Consumption Characteristics

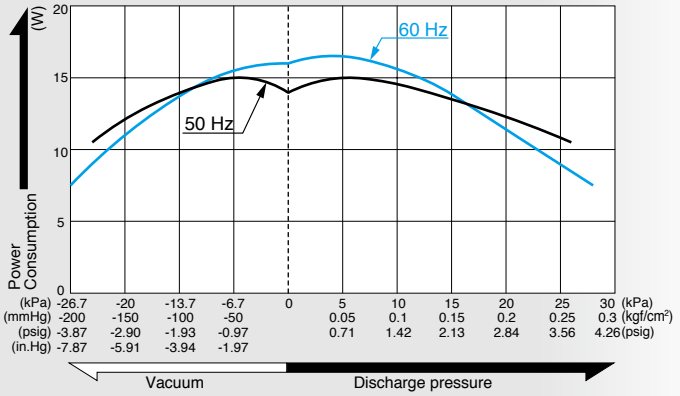

Specifications

Rated Pressure	5 kPa (0.05 kgf/cm²) 0.05 bar 0.71 psig	
Rated Airflow	15 L/min 0.53 cfm	
Maximum Pressure	26 kPa (0.26 kgf/cm²) 0.26 bar 3.70 psig	
Attainable Vacuum	-24 kPa (-180 mmHg) -240 mbar -7.09 in.Hg	
Rated Voltage	120 V AC *1	230 V AC
Power Consumption	15 W	
Rated Frequency	60 Hz	50 Hz
Rated Performance	5,000 hours	
Working Pressure Range	-24 kPa to 26 kPa (-180 mmHg to 0.26 kgf/cm²) -240 mbar to 0.26 bar -7.09 in.Hg to 3.70 psig	
Inlet	7.5 mm O.D. hose barb	
Outlet	7.5 mm O.D. hose barb	
Duty Cycle	60 minutes	
Coil Insulation Class	Class B equivalent	
Mounting Dimensions	66 (L) x 100 (W) mm 2 - 19/32" (L) x 3 - 15/16" (W)	
Weight	0.82 kg 1.81 Lbs	
Leadwire Length	300 mm 11 - 13/16"	

*1: 120 V AC UL version is unavailable.

Application Examples

Massage Devices

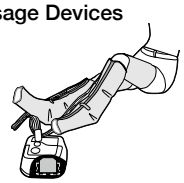

Bedsore Prevention Mattress

External Dimensions (Unit: mm)

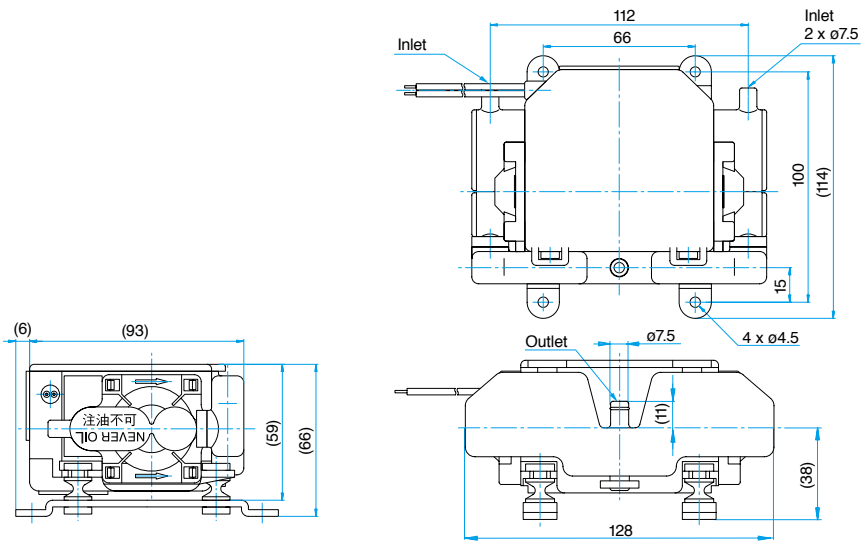

Blower

Model LAM-150

Made to order

CE 230 V (50 Hz)
UKCA 230 V (50 Hz)

Airflow Characteristics

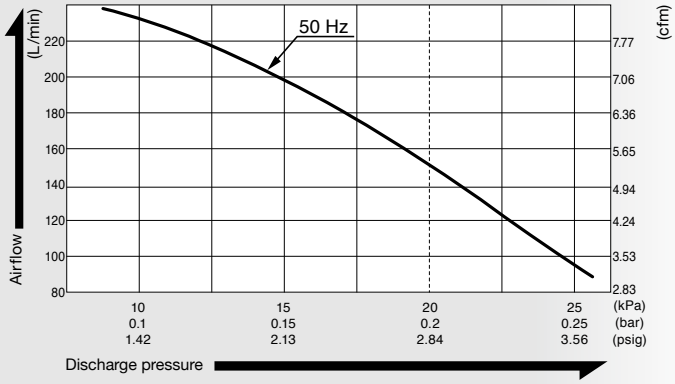

Specifications

Model	LAM-150
Power Supply	230 V AC
Rated Frequency	50 Hz
Power Consumption	140 W
Rated Pressure	20 kPa (0.2 kgf/cm^2) 0.2 bar 2.84 psig
Rated Airflow	150 L/min 5.3 cfm
Weight	12.3 kg 27.1 Lbs

Optional Hose Assemblies

LB03965	LB01070

Application Examples

Grease Trap

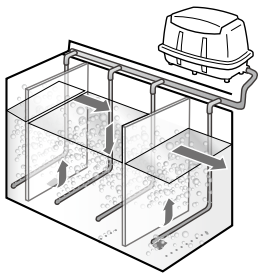

Home Aerobic Sewage Treatment System

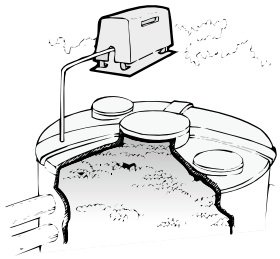

External Dimensions (Unit: mm)

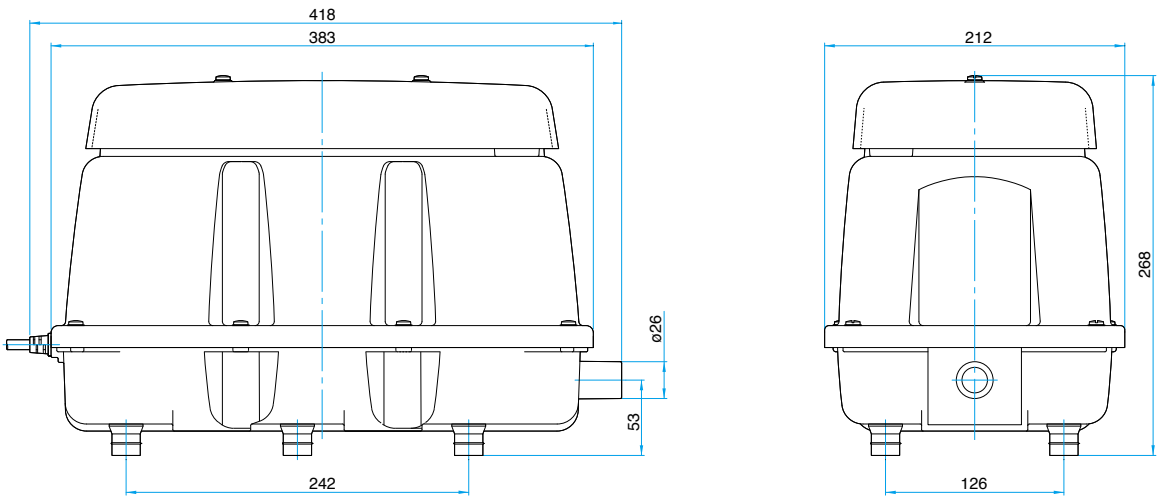

Piezoelectric Pump

BIMOR PUMP

Made to order

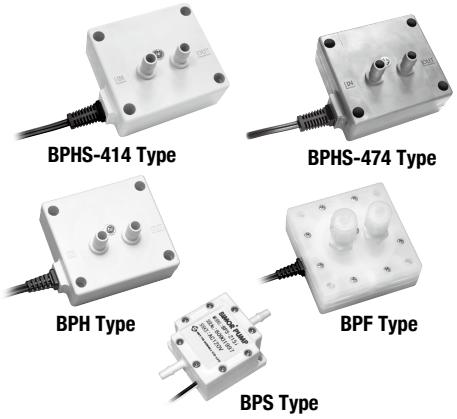

Made to order model

These models are made-to-order models.
Please send a request for quotation to your nearest distributor.

Specifications

*Please see page 87 for external dimensions.

Voltage(AC) — 120 V *1					Voltage(AC) — 240 V *1					Material of Wetted Parts			
Model	Current (mA)	Self-priming Pressure (kPa)*2	Flow Rate (mL/min)*2	Discharge Pressure (kPa)	Model	Current (mA)	Self-priming Pressure (kPa)*2	Flow Rate (mL/min)*2	Discharge Pressure (kPa)	Housing	Liquid Contact Sheet	Valve / O-ring	Weight (g)
—	—	—	—	—	BPS-215i	1.8	3	30	15	PP	PP	IIR	40
—	—	—	—	—	BPS-235G	1.8	1.5	30	15	POM	PTFE	FKM	40
BPH-214i	15	8	350	18	BPH-214i	7.5	8	350	18	PP	PP	IIR	130
—	—	—	—	—	BPH-214D	7.5	8	350	18	PP	PP	VMQ	130
—	—	—	—	—	BPH-414i	15	12	500	35	PP	PP	IIR	140
BPH-414D	30	12	500	35	BPH-414D	15	12	500	35	PP	PP	VMQ	140
—	—	—	—	—	BPH-414E	15	12	500	35	PP	PP	EPDM	140
BPH-414G	30	10	450	32	BPH-414G	15	10	450	32	PP	PTFE	FKM	140
BPH-474G	30	10	400	35	—	—	—	—	—	PPS	PTFE	FKM	170
BPH-474P	30	10	400	35	—	—	—	—	—	PPS	PTFE	FFKM/FEP	170
—	—	—	—	—	BPHS-414i	15	12	700	35	PP	PP	IIR	160
—	—	—	—	—	BPHS-414E	15	12	700	35	PP	PP	EPDM	160
—	—	—	—	—	BPHS-414G	15	12	700	35	PP	PTFE	FKM	160
—	—	—	—	—	BPHS-474G	15	10	500	35	PPS	PTFE	FKM	180
—	—	—	—	—	BPHS-474P	15	10	500	35	PPS	PTFE	FFKM/FEP	180
BPF-465P	30	10	400	35	BPF-465P	15	10	400	35	PFA	PTFE	FFKM/FEP	350

*1: The above performance is obtained by using 25°C water at AC frequency 60 Hz. When the pump is used at AC frequency 50 Hz, the flow rate will decrease approximately 20%.
*2: When the liquid temperature is low, the check valve will harden. As a result, the flow rate and the self-priming pressure will decrease. Especially the flow rate of the pump with fluorine rubber will decrease by half at 5°C, so select with sufficient margin. Since the flow rate will decrease with highly viscous liquids, please check the flow rate with an actual pump before use.

Material Description

EPDM ····· Ethylene Propylene Rubber
FEP ····· Fluoroethylene Propylene
FFKM ····· Perfluoroelastomer
FKM ····· Fluorine Rubber
IIR ····· Butyl Rubber
PFA ····· Fluororesin (Perfluoroalkoxy)
POM ····· Polyacetal
PP ····· Polypropylene
PPS ····· Polyphenylene Sulfide
PTFE ····· Tetrafluororesin (Polytetrafluoroethylene)
VMQ ····· Dimethyl Silicone Rubber

Suitable/unsuitable chemical liquids

Model	Examples of suitable chemical liquids	Examples of unsuitable chemical liquids
BPS-215i BPH-214i BPH-414i BPHS-414i	Ethanol,Dilute hydrochloric acid, Sodium carbonate, Benzaldehyde, Formalin	Xylene, Mineral oil, Carbon tetrachloride, Trichloroethylene, Toluene, Benzene
BPH-414E BPHS-414E	Ammonia water, Ethanol, Dilute hydrochloric acid, Caustic potash, Caustic soda, Methanol	Xylene, Mineral oil, Carbon tetrachloride, Trichloroethylene, Toluene, Benzene
BPS-235G	Ethanol, Xylene,Silicone oil, Kerosene, Toluene, Benzene	Ammonia water, Hydrochloric acid, Hydrogen peroxide, Sodium hypochlorite, Nitric acid, Sulfuric acid
BPH-214D BPH-414D	Ammonia water, Ethanol, Sodium hypochlorite, Methanol	Caustic soda, Carbon tetrachloride, Silicone oil, Trichloroethylene, Toluene, Benzene
BPH-414G BPHS-414G	Ethanol, Hydrogen peroxide, Mineral oil, Sodium hypochlorite	Acetone, Ammonia water, Glacial acetic acid, Hydrofluoric acid, Formalin
BPH-474G BPHS-474G	Ethanol, Xylene, Carbon tetrachloride, Silicone oil, Trichloroethylene	Acetone, Ammonia water, Chlorosulfonic acid, Glacial acetic acid, Hydrofluoric acid, Formalin
BPH-474P BPHS-474P	Ethanol, Chloroform, Glacial acetic acid, Benzene, Methyl ethyl ketone	Chlorosulfonic acid, Fluorine oil, CFC 112, CFC 113
BPF-465P	Ethanol, Aqua regia, Ozone, Carbon tetrachloride, Concentrated nitric acid, Concentrated sulfuric acid, Fuming sulfuric acid	Fluorine oil, CFC 112, CFC 113

*This chart is for reference only. Please confirm under the operating conditions before use.

OTHER PRODUCT

		Page
Cutting oil collecting unit	HK-400A	113
Linicon	LV-125A	115

Other product: Cutting oil collecting unit

Model HK-400A

CE 24 V | UKCA 24 V

The HK-400A collects small amounts of cutting oil that spill from machine tools.

***Compatible with both oil-based cutting oils and water-soluble cutting oils**

- **Install on the side of machines with a magnet.**
- **No air piping required. Save energy by switching from vacuum ejectors.**
- **Comes with a strainer to prevent suction of cutting chips.**
- **Capable of suction of gas & liquid mixture, no worry of motor burns even when idling.**

Specifications

Rated Voltage		24 V DC
Maximum current (*1, Operating pressure range, Fluid: Water 25°C)		450 mA
Flow rate (*1, *3, *4, open discharge (0 kPa), Fluid: Water 25°C)		400 mL/min 0.0141 cfm
Operating pressure range (*1, *2, Fluid: Water 25°C)		0 to 100 kPa (0 to 1 kgf/cm^2) 0 to 1 bar 0 to 14.2 psig
Self-priming pressure (*1, *3, Fluid: Air 20°C)		40 kPa 0.4 bar 5.69 psig
Duty cycle (Fluid: Water 25°C)		Continuous
Rated performance (*5)		6000 hours (MTTF)
Circuit breaker rated current		1 A
Circuit Breaker Box protection grade		IP65
Applicable fluid		Cutting oil (water-soluble and water-insoluble)
Recommended fluid viscosity (*4, *6)		30 mPa•s or less
Place of use		Indoors
External dimensions		119 mm (L)×118 mm (W)×81 mm (H) 4-11/16"(L) x 4-41/64"(W) x 3-3/16
Weight	Main Body (Pump Unit, Circuit Breaker Box)	0.6 kg 1.32 Lbs
	Power Cable	0.3 kg 0.66 Lbs
	Strainer Unit	0.3 kg 0.66 Lbs

Installation examples

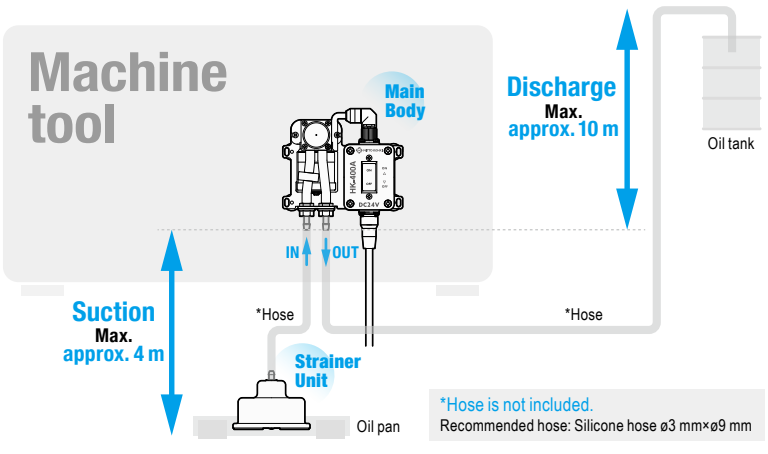

*1: Conditions are for rated voltage, cool unit, and initial operation.
*2: The product cannot be restarted from the closed pressure state or used beyond the working pressure range.
*3: When the fluid reaches a low temperature, the check valve hardens and the flow rate and self-suction power will decrease.
*4: When highly viscous cutting oil (2 mPa•s or more) is collected, the flow rate decreases. Especially when using with water-insoluble cutting oil, the fluid viscosity fluctuates significantly according to temperature change, so check whether the pump can be used under actual operating conditions.
*5: Rated performance (MTTF: Mean Time to Failure) is the mean value of the accumulated operating time at the rated voltage, open discharge (0 kPa) and water temperature of 25°C and when the flow rate becomes 80% (320 mL/min) or less of the specified value.
The rated performance varies depending on the operating conditions (operating pressure, operating fluid temperature, operating fluid viscosity, operating environment, etc.).
*6: Refer to the following formula for conversion from kinematic viscosity [mm2/s] to viscosity [mPa•s].
Viscosity [mPa•s] = Kinematic viscosity [mm2/s] × Density [g/cm3]
(Kinematic viscosity: 1 mm2/s = 1 cSt Viscosity: 1 mPa•s=1 cP)

Cutting oil collecting capability

*Refer to the characteristic diagram and conversion formula below and consider whether the product can be used or not.

Viscosity vs. Flow Rate Characteristics

- Input power... 24 V DC Brown wire: +24 V Blue wire: GND
- Piping conditions... Silicone hose Inner diameter: ø3 mm, length: 4 m No lifting load

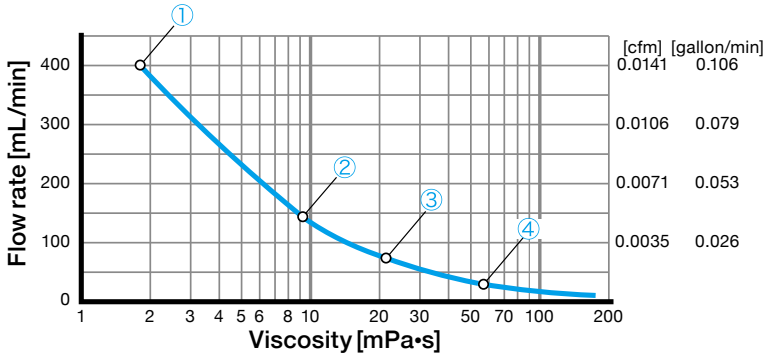

	Liquid type	Kinematic viscosity [cSt] [mm²/s] (40˚C)	Viscosity [mPa•s] (24±1˚C)	Flow rate [mL/min] (24±1˚C)
①	Water	–	1.9	400
②	Sample A	7.0	9.4	145
③	Sample B	15.0	21.9	74
④	Sample C	32.5	56.8	27

Viscosity conversion formula

Viscosity [mPa•s] = Kinematic viscosity [mm²/s] × Density [g/cm³]

(Kinematic viscosity: 1 mm²/s = 1 cSt Viscosity: 1 mPa•s = 1 cP)

- Viscosity is measured with the digital viscometer VISCO Low Viscosity Sample Adapter (ULA) manufactured by Atago Co., Ltd.
- Refer to the above formula for conversion from kinematic viscosity to viscosity. For the kinematic viscosity and density of the cutting oil used, contact the cutting oil manufacturer.
- Characteristic diagrams are for reference only and are not guaranteed values.
- The above performance may not be attained depending on the operating conditions (operating environment, liquid type, piping material). Especially when using water-insoluble cutting oil, the fluid viscosity fluctuates significantly depending on the temperature change, so please judge whether the pump can be used or not under actual operating conditions.

List of replacement parts

Part Name	Part No.	
Pump Unit	LB09133	
Filter Unit	LB09141	
Power Cable (5 m)	LB09140	
Strainer Unit [Components] Strainer, Filter Unit, Screw Wire Mesh, Filter Cover	LB09134	

Part Name	Part No.	
Inline Filter	LB09137	
Filter Cover [Components] Filter Cover, Screw	LB09139	
Circuit Breaker Box	LB09608	
Wire Mesh	LB09138	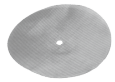

Optional accessory

Part Name	Part No.	
Silicone Hose (ø3×ø9×4000 mm)	LB09135	

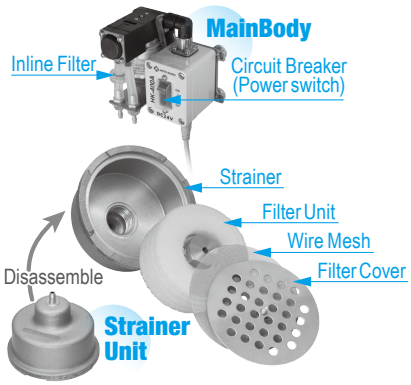

External Dimensions (Unit: mm)

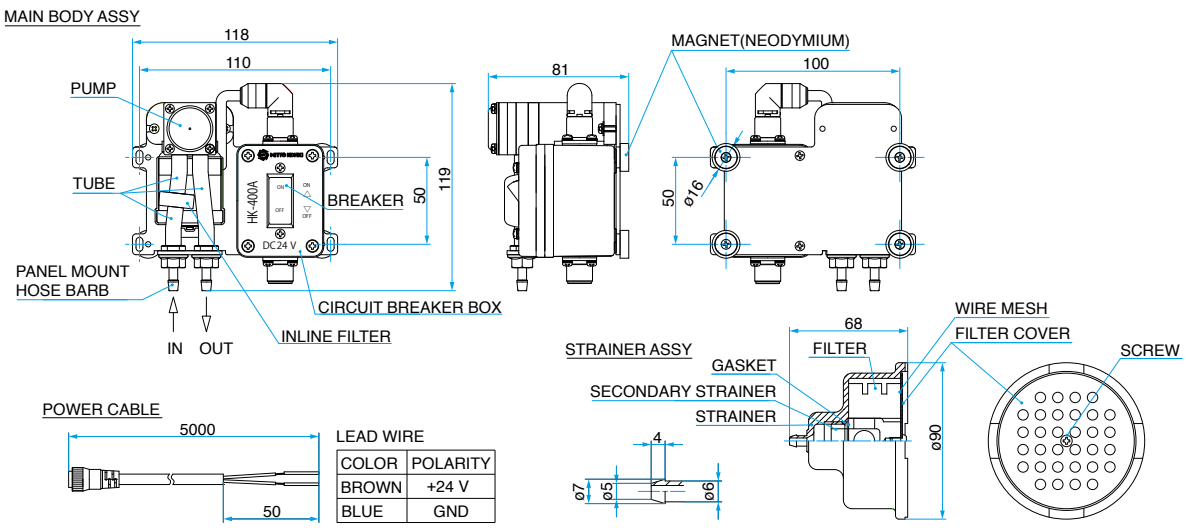

Other product: Linicon (Vacuum Pump)

Model LV-125A

CE 230 V | UKCA 230 V

Oil-less Compressor

- **AC linear free piston vacuum pump**
- **Equipped with fuse and removable power cable**
- **Compact and lightweight**
- **Low noise level**
- **Oil-less construction**

Specifications

Rated Voltage	115 V AC	230 V AC
Power Consumption	14 W	15 W
Rated Frequency	60 Hz	50 Hz
Maximum Vacuum	-33.3 kPa (-250 mm Hg, -333 mbar, -9.84 in. Hg)	
Dimensions	135 (L) x 91 (W) x 146 (H) mm (5 - 5/16" x 3 - 37/64" x 5 - 3/4")	
Duty Cycle	Continuous	
Coil Insulation Class	B or its equivalent	E or its equivalent
Weight	1.5 kg (3.3 Lbs)	

Vacuum Pick-Up Set

If the following options are prepared together with Model LV-125A, the Vacuum Pick-Up Set can be arranged.

① LB07629 Vacuum pen assembly
② LQ01267 Tube 3 x 5 x 2000
③ LA71242 Needle 1 x 1.5 x 40 (6 pcs/set)
④ LA71251 Pad 6 mm dia.
⑤ LA71249 Pad 4 mm dia.
⑥ LA71143 Pen stand

The needle can be bent in accordance with applications.
***LA71069 P-100 includes ① - ⑤**

High Adsorption Power

In the case that the depth of vacuum is -33.3 kPa (-250 mmHg) and the surface to be vacuumed is flat.

Pad Diameter	A Suction power when the adsorption face is placed horizontally and moved upward.	B Suction power when the adsorption face is placed vertically and moved laterally.
4 mm	20 g	10 g
6 mm	50 g	25 g

Adsorption power: W (g) = D^2 x 7.85 x 250/736

A is calculated by multiplying the safety rate of 0.5 to the above equation, and then rounded.

B is calculated by multiplying the safety rate of 0.25 to the above equation, and then rounded.

Application Examples

Transferring spherical objects such as balls

Assembling precision parts

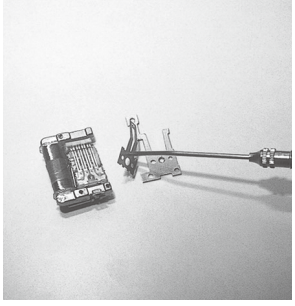

Moving tiny parts

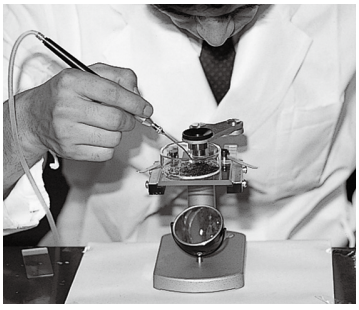

Transferring uneven parts

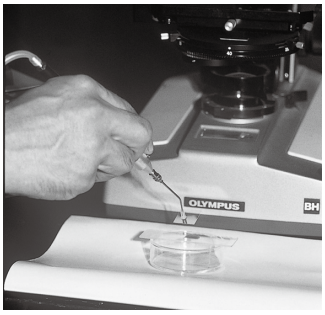

Most suitable for handling electronic parts such as ICs and LSIs. Also small parts, micro parts such as those in watches and chemicals.

Safety Guide

Be sure to carefully read the following precautions and the operation manual that comes with the product before use.

Precautions for Compressors and Vacuum Pumps

⚠ CAUTION

⚠ WARNING **Do not let the unit draw in or discharge any gas other than air.** This may cause an explosion, fire or electric shock.

Avoid drawing in water and splashing any water on the unit. Otherwise there is the risk of a short circuit causing a fire or electric shock.

The unit must be incorporated into a device that has an appropriate case and wiring. Not doing so may cause a fire, electric shock or burns.		**Avoid any strong impact to the unit as this may reduce the performance and durability of the unit.**	
Do not use the unit with a power supply other than the voltage shown on the unit. Doing so may cause a fire or electric shock.	**Do not install the unit in a completely enclosed case (box) without proper or adequate ventilation.** This may cause a fire or electric shock.	**Use the unit within the proposed ambient temperature range.** Using it out of the range may cause a fire or electric shock.	**Units must not be modified.** Modifications may cause a fire or electric shock.
Do not place combustible materials near the unit. This may cause a fire.	**The grounding screw of the unit should be utilized, except when connected to a double insulation device.** Not grounding the unit may result in a fire or electric shock.	**The unit must be installed at a level higher than the water surface when it is used for bubbling.** If the unit is installed at a level lower than the water surface, fluid may flow into the unit and cause an electric shock.	**Do not allow anything to be placed on or to fall onto the lead wires.** This may damage them and cause a fire or electric shock.
Do not pull, scratch, forcefully bend, twist or heat the lead wires. This may damage them and cause a fire or electric shock.	**When incorporating the unit into a device, the lead wires from the unit should be connected securely to the wiring of the device by means of soldering, crimping or by the use of screws.** Insufficient connections may cause a fire or electric shock.	**The unit must not be disassembled or repaired by anyone other than a person who has received Nitto Kohki technical training. (Except in the case of filter and piston maintenance and inspection in accordance with the operation manual.)** Otherwise it may result in a fire or electric shock.	**The unit must be disconnected from its power source before cleaning or replacing filters.** Failure to do so may result in an electric shock or injury.
When drawing in air contaminated with moisture, powder, or dust, add an external device to the unit for removing them. If these contaminants are drawn in, it may cause an electric shock. *Only for vacuum pumps.			

Precautions for Blowers

⚠ CAUTION

⚠ WARNING **Do not let the unit draw in or discharge any gas other than air.** This may cause an explosion, fire or electric shock.

Do not install the unit in a place where it may be soaked with water or covered with snow. This may cause an electric shock or fire.	**Do not use the unit in hot and humid conditions.** This may cause an electric shock, breakdown or fire.	**Always place the unit above water level.** Failure to do so may result in an electric shock or breakdown.	**Use a waterproof wall outlet to supply power to the unit.** Failure to do so may cause an electric shock or fire.
Use a power supply equipped with a ground-fault interrupter and overcurrent breaker. Failure to do so may cause an electric shock or fire.	**Have a qualified electrician do the electrical work.** Failure to do so may cause an electric shock or fire.	**Never modify the unit.** This may cause an electric shock, breakdown, or fire.	**Do not use the unit with the outlet port closed or at free displacement.** This may cause an electric shock, breakdown, or fire.
The power supply voltage must be limited to the individual unit specifications as stated on the nameplate or instruction manual. Failure to do so may cause an electric shock or fire.	**Never touch the power plug with wet hands.** This may cause an electric shock.	**Insert the power plug securely into the innermost position.** Failure to do so may cause an electric shock.	**Do not put anything on the power cable.** Doing so may cause a fire or electric shock.
Do not place anything near the unit (within about 50 cm). Doing so may cause an electric shock or fire.	**Do not use the unit in a place where flammable materials, such as gasoline, thinner, lacquer, benzene, etc. are being used.** This may cause a fire or explosion.	**Check the power plug at least once a year for dirt and dust and clean if necessary.** Failure to do so may result in an electric shock or fire.	**The power plug must be disconnected before the air filter is cleaned or replaced.** Failure to do so may cause an electric shock or accident.
Always grasp the power plug to disconnect the unit from the socket. Pulling it out by the cord may cause an electric shock or breakdown.	**Any removed air filter must be replaced before the operation is resumed.** Failure to do so may cause an electric shock or breakdown.	**Never try to disassemble or repair the unit.** This may cause an electric shock, breakdown, fire or injury. Any repairs must be done by an electrician authorized by Nitto distributors.	**Do not cover the Blower with a box or the like without proper or adequate ventilation.** Doing so may cause a breakdown or fire.

Precautions for DC-Motor Pumps

Connect the plus terminal (If there is no indication of the plus terminal, use the terminal with a red mark as the plus terminal.) or the red lead wire of the unit to the plus terminal of the DC power source. Reverse connection may cause a breakdown, malfunction, or reduced rated performance.

Precautions for Liquid Pumps

⚠ CAUTION

⚠ WARNING **Confirm the suitability of the liquid that passes through the unit before use.** Failure to do so may cause a leak, explosion, fire or electric shock.

Avoid any liquid contaminated with solids such as debris or dust. If dust or debris sticks to the valve, the unit may not perform properly. When the intrusion of dust or debris is expected, be sure to place a filter on the inlet side of the unit.	**Avoid any liquid that may crystallize.** If crystals stick to the valve, the unit may not perform properly. A preliminary test on the unit with the liquid to be used is recommended.	**The performance of the unit is measured with the pump in its proper mounting position, which is described in the user's manual. Different mounting positions or nozzle directions may result in different performances.**
		There may be a risk that even a slight liquid pressure can open the valve due to siphon phenomenon. Place the outlet port at a position higher than the water level in the supply tank, or install a check valve if necessary to prevent water from being siphoned into the pump.

When Using Compressors and Vacuum Pumps

Check with our distributor in advance if you plan to use the compressor/vacuum pump at free displacement (0 kPa), or the vacuum pump with inlet port closed, or the compressor at maximum pressure.

As compressors and vacuum pumps employ a self-cooling system, if the units are used at more than the rated pressure, the duty cycle of some of the models will need to be shortened.

- When wanting to increase the duty cycle, it is recommended to use a fan to cool the compressor.
- Do not use the compressor near flammable liquid gas.
- Do not use the compressor in the rain or in wet and damp places.
- Do not allow the pump to draw in corrosive gas.
- Be sure to install and use the compressor at a position higher than water level.

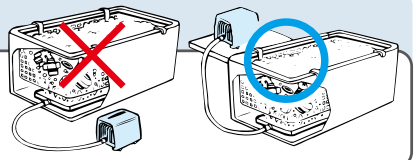

Handling Problems

In any of the below cases, stop operation immediately, switch off the power and disconnect the unit from the power supply. Ask our distributor for repair.

- When oil such as a lubricant has been applied to the unit in error.
- When the unit has suffered a severe impact such as being dropped.
- When liquid such as water has entered into the unit by mistake.
- When an abnormal operation is observed, such as the emission of smoke, or an unusual smell or noise.

Precautions for Pumps with Brush Motor

As operational time is increased, the value of insulation resistance becomes lower than that of the initial insulation resistance.
If the outer surface of motor and the grounding of the power source are connected, do a preliminarily check to assure no issues occur.

Our Product Warranty

Our Products are covered by a limited warranty ("Warranty") under the following conditions.
1. Duration: depends on individual products and their specifications
2. Service: repair or replacement at our option
Please be aware that a warranty claim will not be reimbursed with a cash payment.
3. Object Person: original purchaser from our designated distributors

4. Out of Warranty
The following conditions are not covered by Warranty
- purchaser improperly used our products.
- purchaser did not comply with specifications and instructions stipulated in this Catalog when using our products, or
- purchaser did not comply with Caution for Safety stipulated in this Catalog when using our products, or
- repairing of our products was done by someone other than us, or
- We are not able to anticipate or predict such defects or causes of failure based on general technical knowledge of the specific application before or at the time of shipment, or
- defects are caused by the force majeure or other situations not attributable to us, or
- defects are not clearly attributable to us and
- defects are not about design, material or workmanship.

Limitation of Liability

We, including designated distributors, will not be liable for any special damages or consequential damages and will not have any monetary liability to purchasers.

CUPLA

CUPLA, Quick Connect Couplings, Enable Flexible, Fast, and Secure Connections in Various Fluid Lines.

PLASTIC CUPLA BC Type Valveless

For low pressure air piping

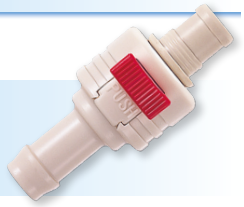

Working pressure	Valve structure	Applicable fluid
0.07 MPa {0.7 kgf/cm²}	Straight through	Air

- To connect, just push the plug into the socket.
- Plastic makes this ideal for use in environment prone to rusting.
- Compact and light weight for easy handling.
- Valveless construction gives more stable flow.

CUBE CUPLA

Small and lightweight coupling for air supply lines to medical and/or scientific equipment

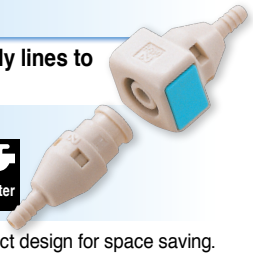

Working pressure	Valve structure	Applicable fluids
0.07 MPa {0.7 kgf/cm²}	Two-way shut-off / One-way shut-off / Straight through	Air / Water

- Ultra-lightweight, made of polyacetal resin. Compact design for space saving.
- Just push plug into socket for connection. Simply press the button on the socket for disconnection.
- Both socket and plug have built-in valve types and valveless types. Valveless structure suits high viscosity fluids.
- Suitable for a wide range of applications from medical/scientific equipment to beverage machines or semiconductor manufacturing devices.

MICRO CUPLA

For piping in pneumatic control devices

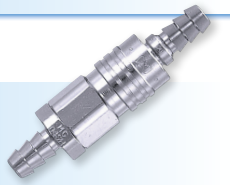

Working pressure	Valve structure	Applicable fluids
1.0 MPa {10 kgf/cm²}	One-way shut-off	Air / Water

- Even though the valve is built in the socket, the sleeve outer diameter is confined to 9.5 mm.
- Compact design for piping in narrow spaces.
- Push-to-connect operation. Tube Fitter type for even easier tube insertion.
- Plated brass and stainless bodies are available for excellent corrosion resistance.
- Available in various end configurations to satisfy a wide range of pneumatic applications.

SMALL CUPLA

Lightweight and compact for use on air lines and scientific equipment

Working pressure	Valve structure	Applicable fluids
0.7 MPa {7 kgf/cm²}	One-way shut-off	Air / Water

- Compact socket with built-in valve and 14 mm OD sleeve.
- Just push in the plug to the socket for connection.
- Also available with quick connect/disconnect Tube Fitter type.
- Chrome-plated brass for corrosion resistance adopted for the body.
- Available in various end configurations to satisfy a wide range of pneumatic applications.

SUPER CUPLA

Light, compact for air piping connections

Working pressure	Valve structure	Applicable fluid
1.0 MPa {10 kgf/cm²}	One-way shut-off	Air

- Lightweight design suits direct connection to power tools.
- Push-to-connect for easy operation.
- Also available with quick connect/disconnect Tube Fitter type.
- Chrome-plated steel for corrosion resistance adopted for the body. (Partly aluminum)
- Available in various end configurations for a wide range of pneumatic applications.

HI CUPLA 200

Push-to-connect type for air lines

Working pressure	Valve structure	Applicable fluid
1.5 MPa {15 kgf/cm²}	One-way shut-off	Air

- Just push the plug into the socket for simple and secure connection.
- New valve design for low pressure loss to achieve flow rate increase (15% up over the conventional model).
- End-face seal is achieved when connected.
- Enhanced operability with low connection resistance.
- End-face seal design is superior to external seal with an O-ring due to no seal damage caused by exhausted lubrication.
- Also available with quick connect/disconnect Tube Fitter type.

HI CUPLA

Universal purpose couplings for air lines

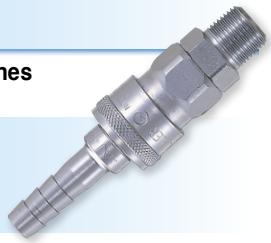

Working pressure	Valve structure	Applicable fluids (Steel applies to air only)
1.5 MPa {15 kgf/cm²} / 1.0 MPa {10 kgf/cm²}	One-way shut-off	Air / Water

- An excellent general purpose coupling for connecting factory air supply to pneumatic tools.
- Steel CUPLA is suitable for air. Brass or stainless steel is suitable for water.
- Critical structural parts of steel models are heat-treated for increased strength giving greater durability and resistance to wear.
- Available in various body materials, sizes and end configurations applicable to a wide range of applications.

HI CUPLA ACE

Lightweight plastic coupling with automatic safety lock for air line applications

Working pressure	Valve structure	Applicable fluids
1.5 MPa {15 kgf/cm²}	One-way shut-off	Air / Water

- Pressure ratings comparable to steel CUPLA.
- A built in “automatic lock mechanism” locks the sleeve upon connection, thus prevents accidental disconnection.
- Just push plug into socket for simple connection.
- The weight is a quarter of steel HI CUPLA for easy handling.
- Can be used for air and water.

For more information, please visit **http://www.nitto-kohki.co.jp/e/prd/d_cat/** and see our eCatalog here.

Air Compressor, Vacuum Pump & Liquid Pump

Japanese
www.nitto-kohki.co.jp/network/jp/

Vietnamese
www.nitto-kohki.co.jp/network/vi/

English
www.nitto-kohki.co.jp/network/

Indonesian
www.nitto-kohki.co.jp/network/id/

Thai
www.nitto-kohki.co.jp/network/th/

Spanish
www.nitto-kohki.co.jp/network/es/

YouTube
www.youtube.com/c/NittoKohkiGLOBAL

eCatalog
www.nitto-kohki.co.jp/e/prd/d_cat/

NITTO KOHKI CO., LTD.

Head Office

9-4, Nakaikegami 2-chome, Ohta-ku, Tokyo 146-8555, Japan
Tel : +81-3-3755-1111 Fax : +81-3-3753-8791 E-mail : overseas@nitto-kohki.co.jp
www.nitto-kohki.co.jp/e/

ISO9001
JQA-2025
ISO14001
JQA-EM4057
H.Q./R&D Lab

Overseas Affiliates / Offices

NITTO KOHKI U.S.A., INC.
46 Chancellor Drive, Roselle, Illinois 60172, U.S.A.
For Pump
Tel : +1-630-924-8811 Fax : +1-630-924-0808
For CUPLA
Tel : +1-630-924-5959 Fax : +1-630-924-1174
For Tool
Tel : +1-630-924-9393 Fax : +1-630-924-0303
www.nittokohki.com/

NITTO KOHKI EUROPE GMBH
Gottlieb-Daimler-Str. 10, 71144 Steinenbronn, Germany
Tel : +49-7157-989555-0 Fax : +49-7157-989555-40
www.nitto-kohki.eu/

NITTO KOHKI EUROPE GMBH UK Branch
Unit A5, Langham Park Industrial Estate, Maple Road,
Castle Donington, Derbyshire DE74 2UT, United Kingdom
Tel : +44-1332-653800 Fax : +44-1332-987273
www.nitto-kohki.eu/

NITTO KOHKI CO., LTD. Bangkok Representative Office
2 Jasmine Building, 22nd Floor, Soi Prasarnmitr(Sukhumvit23),
Sukhumvit Road, North Klongtoey, Wattana, Bangkok 10110, Thailand
Tel : +66-2612-7388
Thai www.nitto-kohki.co.jp/network/th/
Vietnamese www.nitto-kohki.co.jp/network/vi/

NITTO KOHKI CO., LTD. India Liaison Office
14th Floor, Tower 5B, DLF Epitome, DLF Cyber City, Phase 3, Gurugram,
Haryana 122002, India
Tel : +91-124-460-7701
www.nitto-kohki.co.jp/network/

NITTO KOHKI CO., LTD. Singapore Branch
18, Kaki Bukit Road 3, #02-12, Entrepreneur Business Centre, Singapore 415978
Tel : +65-6227-5360 Fax : +65-6227-0192
www.nitto-kohki.co.jp/network/

NITTO KOHKI CO., LTD. Indonesia Representative Office
Centennial Tower 35th Floor Jl. Jend. Gatot Subroto Kav. 24-25,
Jakarta 12930, Indonesia
Tel : +62-21-2953-9500
www.nitto-kohki.co.jp/network/id/

NITTO KOHKI AUSTRALIA PTY LTD
77 Brandl Street, Eight Mile Plains, Queensland 4113, Australia
Tel : +61-7-3340-4600 Fax : +61-73340-4640
www.nitto-australia.com.au/

NITTO KOHKI (SHANGHAI) CO., LTD.
Room1506, Suite C, Orient International Plaza,
No.85 Loushanguan Road, Shanghai 200336, China
Tel : +86-21-6415-3935 Fax : +86-21-6472-6957
www.nitto-kohki.cn/

NITTO KOHKI (SHANGHAI) CO., LTD. Shenzhen Branch
Room 708, Building 1, Wanting Building, No. 2009 Baoyuan Road,
Baoan District, Shenzhen, Guangdong 518102, China
Tel : +86-755-8375-2185 Fax : +86-755-8375-2187
www.nitto-kohki.cn/

DISTRIBUTED BY

บริษัท นานดีอินเตอร์เทรด จำกัด
NANDEE INTER-TRADE CO., LTD.
314,316,318,320,322 ซอยจันทน์32 ถนนจันทน์ แขวงทุ่งวัดดอน เขตสาทร กทม. 10120

: 0-2675-8239
: @nandeeintertrade
: nandeeintertrade
: www.nandee.co.th
: marketing@nandee.co.th
sales@nandee.co.th

Specifications and designs are subject to change at any time without notice.
The contents of this catalog are current as of June 2022.